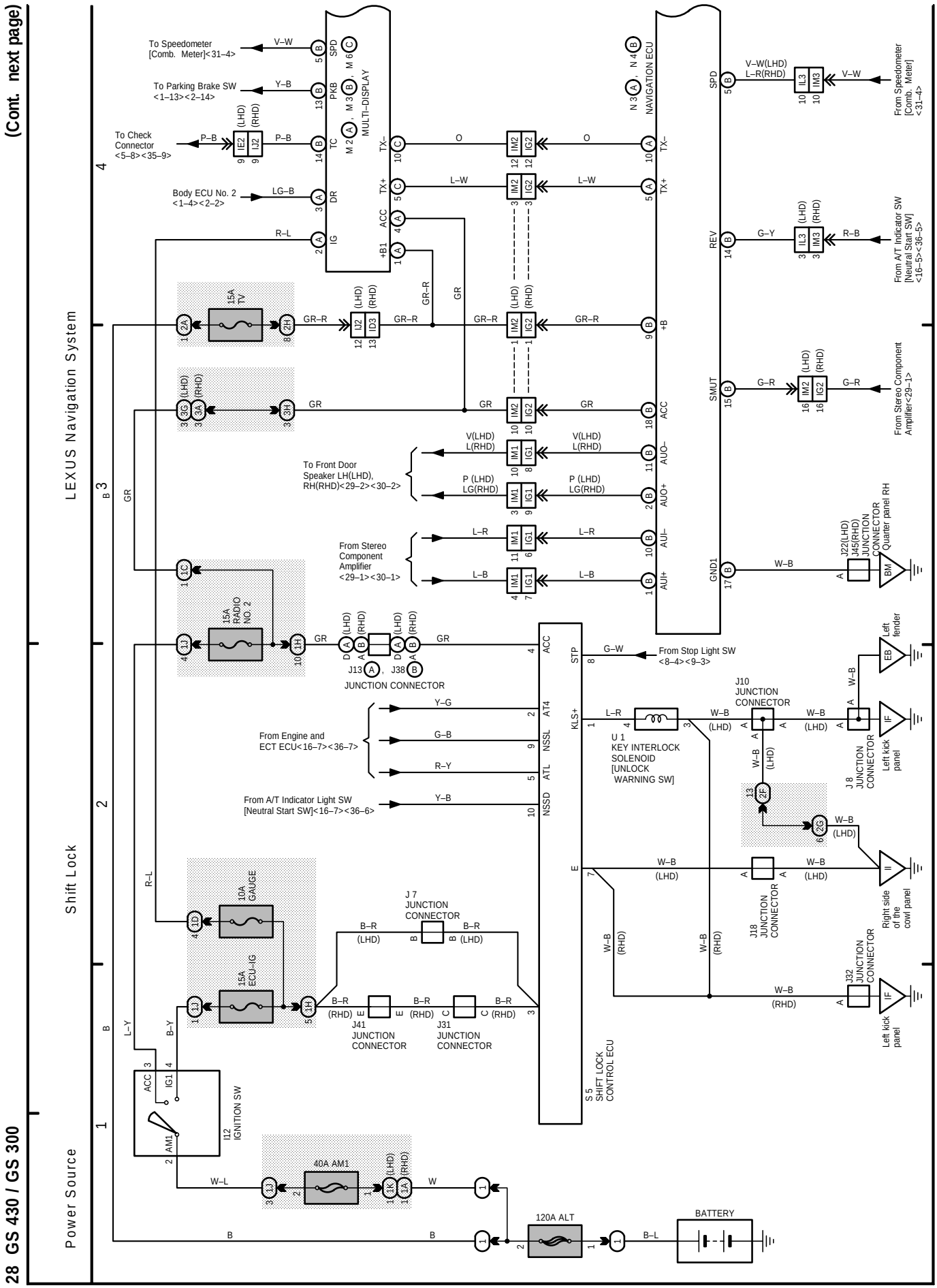
(Cont. next page)
28 GS 430 / GS 300
Power Source
Shift Lock
LEXUS Navigation System
To Speedometer [Comb. Meter]<31–4>
To Parking Brake SW <1–13><2–14>
To Check Connector <5–8><35–9>
Body ECU No. 2 <1–4><2–2>
MULTI–DISPLAY
NAVIGATION ECU
From Speedometer [Comb. Meter] <31–4>
From A/T Indicator SW [Neutral Start SW] <16–5><36–5>
From Stereo Component Amplifier<29–1>
To Front Door Speaker LH(LHD), RH(RHD)<29–2><30–2>
From Stereo Component Amplifier <29–1><30–1>
J22(LHD) J45(RHD) JUNCTION CONNECTOR Quarter panel RH
From Stop Light SW <8–4><9–3>
J13 , J38 JUNCTION CONNECTOR
From Engine and ECT ECU<16–7><36–7>
From A/T Indicator Light SW [Neutral Start SW]<16–7><36–6>
U 1 KEY INTERLOCK SOLENOID [UNLOCK WARNING SW]
J10 JUNCTION CONNECTOR
J 8 JUNCTION CONNECTOR
J18 JUNCTION CONNECTOR
J32 JUNCTION CONNECTOR
J 7 JUNCTION CONNECTOR
J41 JUNCTION CONNECTOR
J31 JUNCTION CONNECTOR
S 5 SHIFT LOCK CONTROL ECU
I12 IGNITION SW
15A TV
15A RADIO NO. 2
10A GAUGE
15A ECU–IG
40A AM1
120A ALT
BATTERY
Left fender
Left kick panel
Right side of the cowl panel
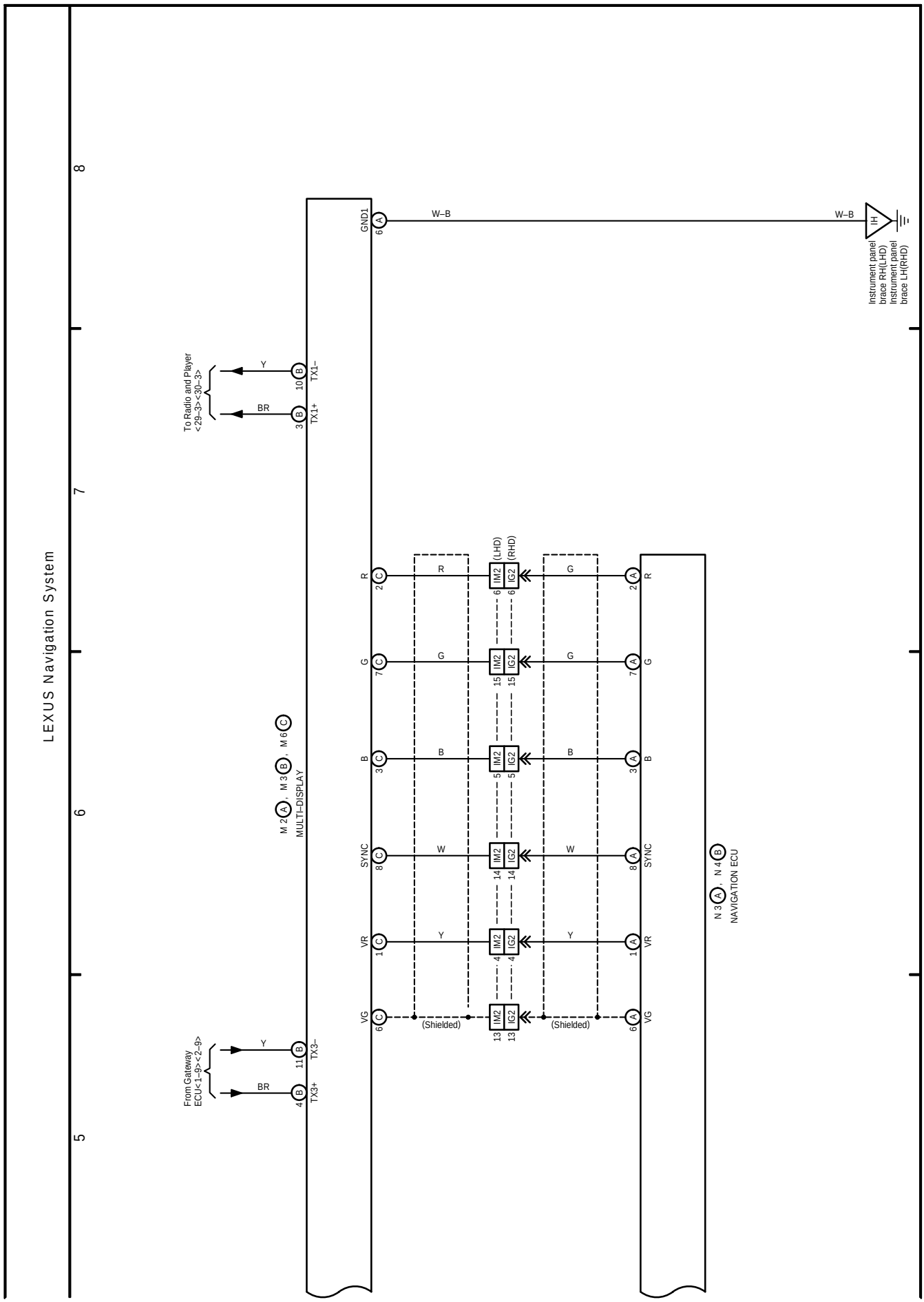
28 GS 430 / GS 300 (Cont' d)