(Cont. next page)

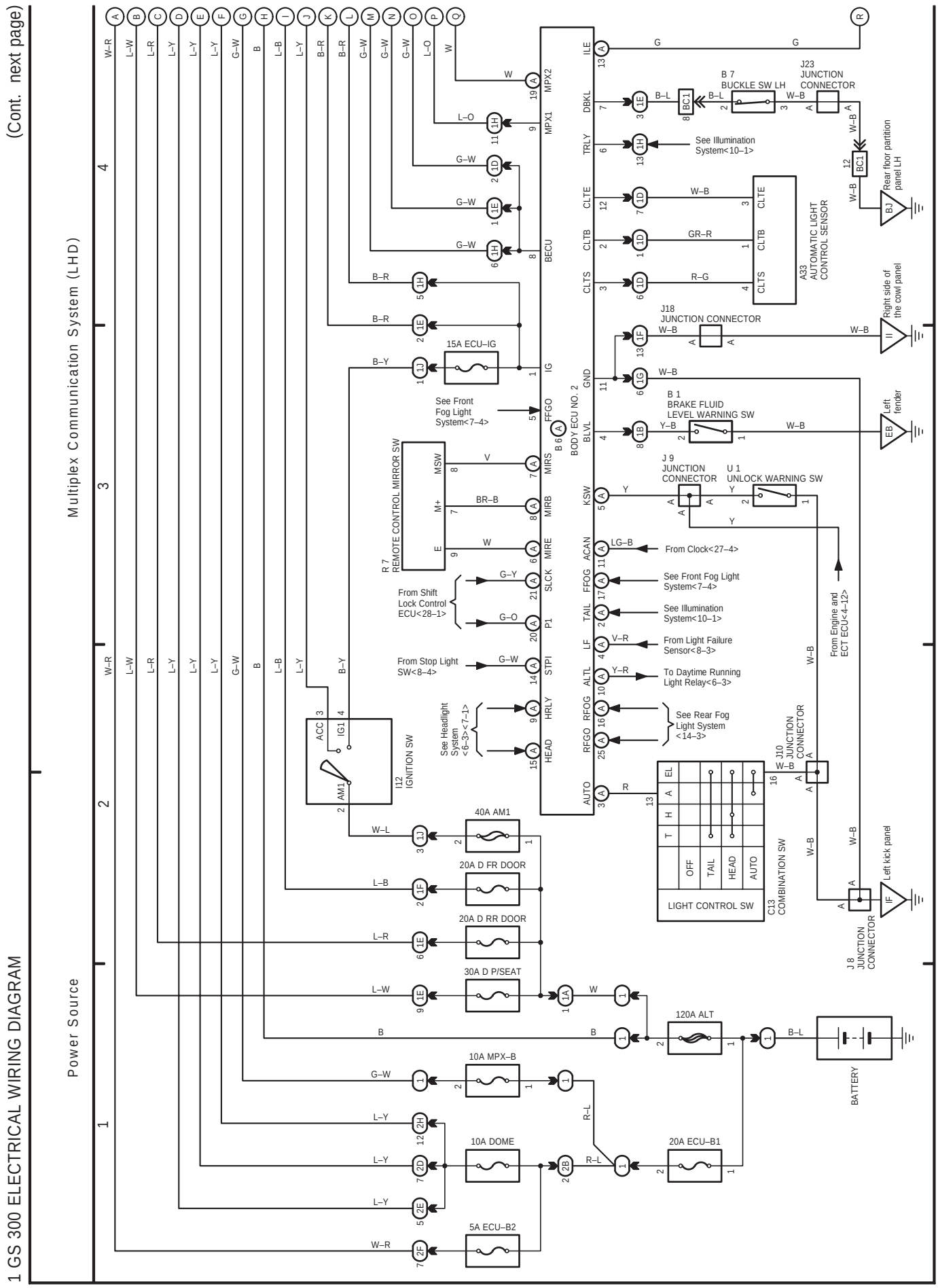

(Cont. next page)

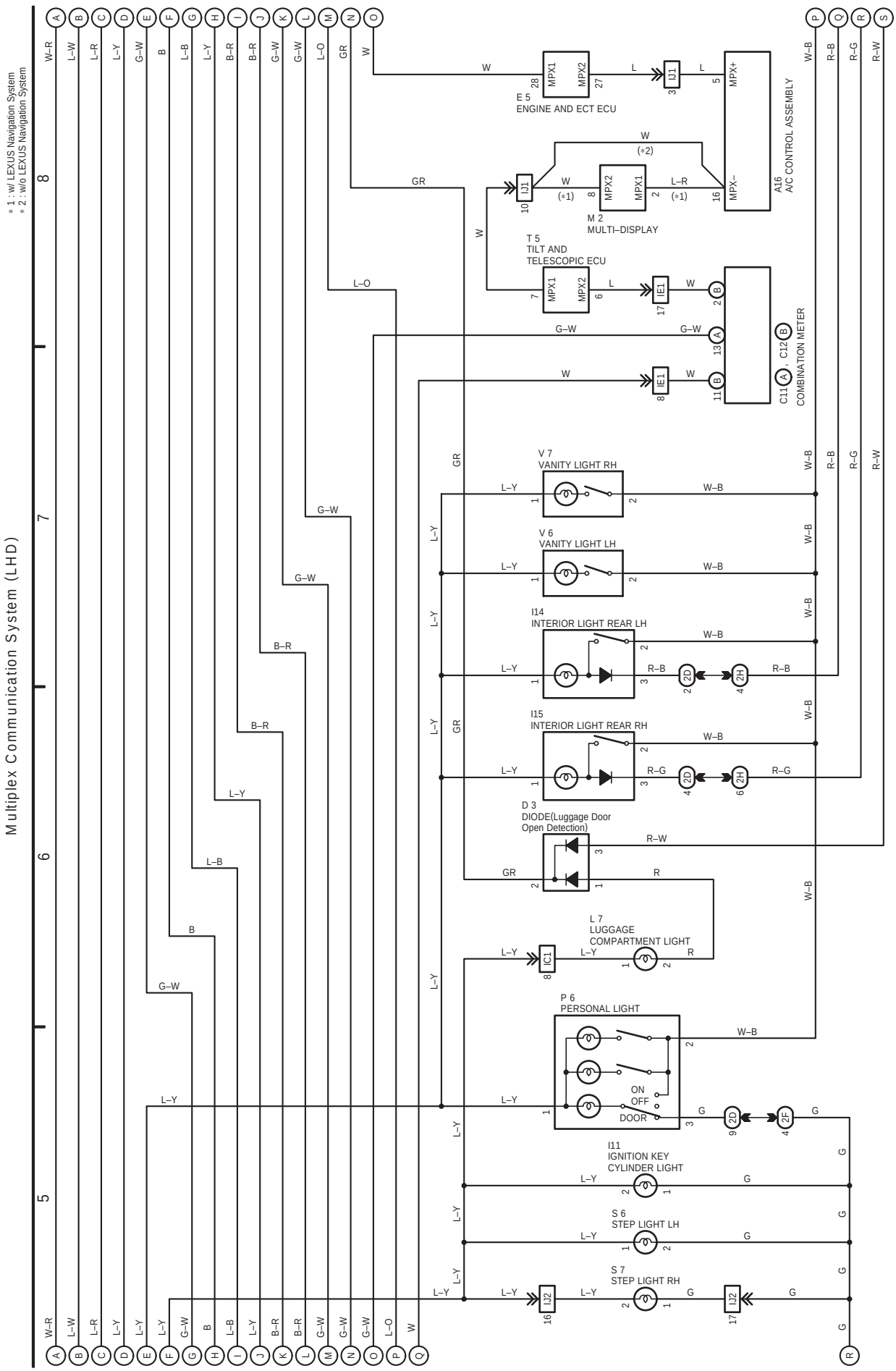

(Cont. next page)

Multiplex Communication System (LHD)

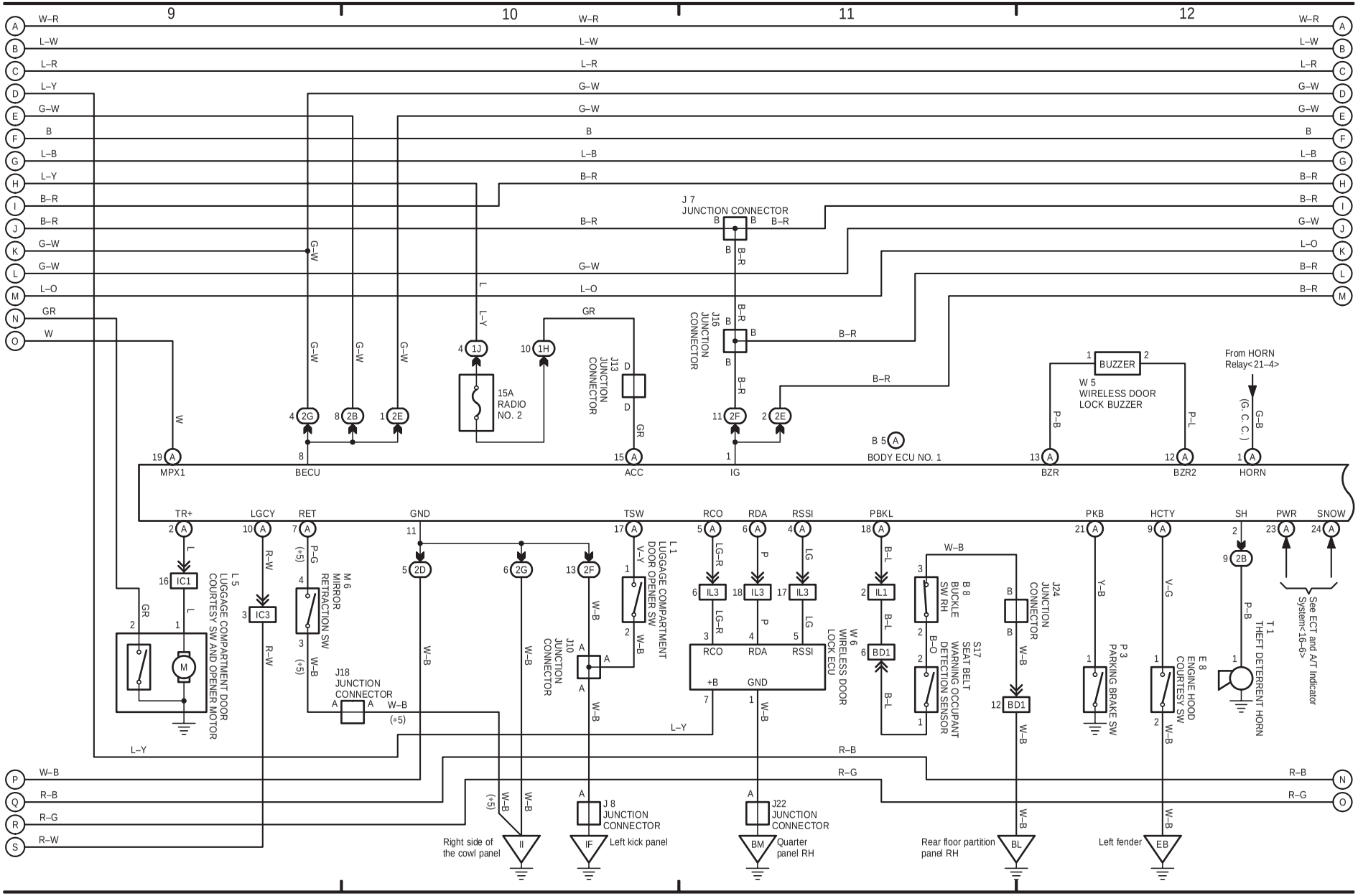

(Cont. next page)

Multiplex Communication System (LHD)

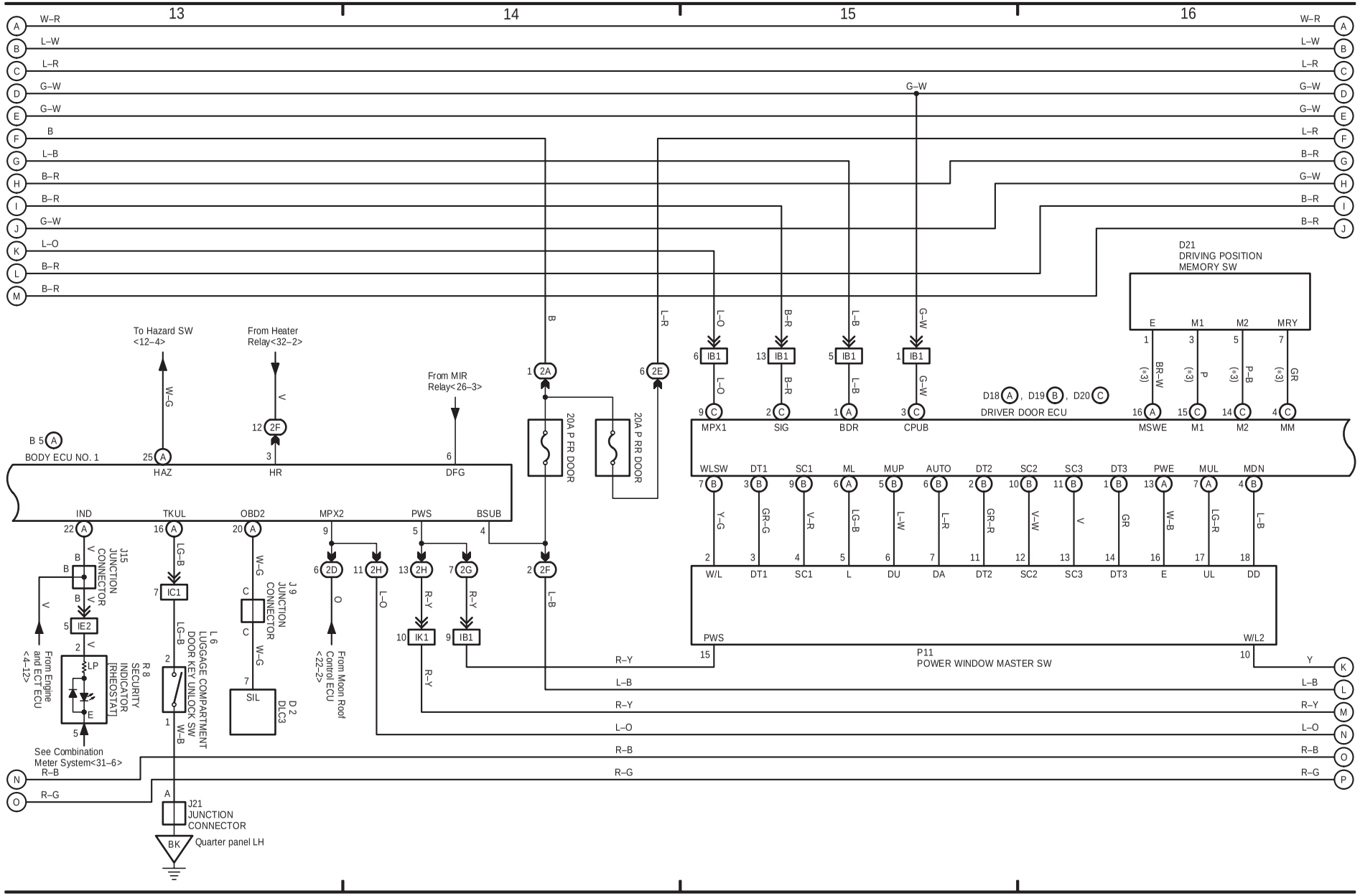

(Cont. next page)

Multiplex Communication System (LHD)

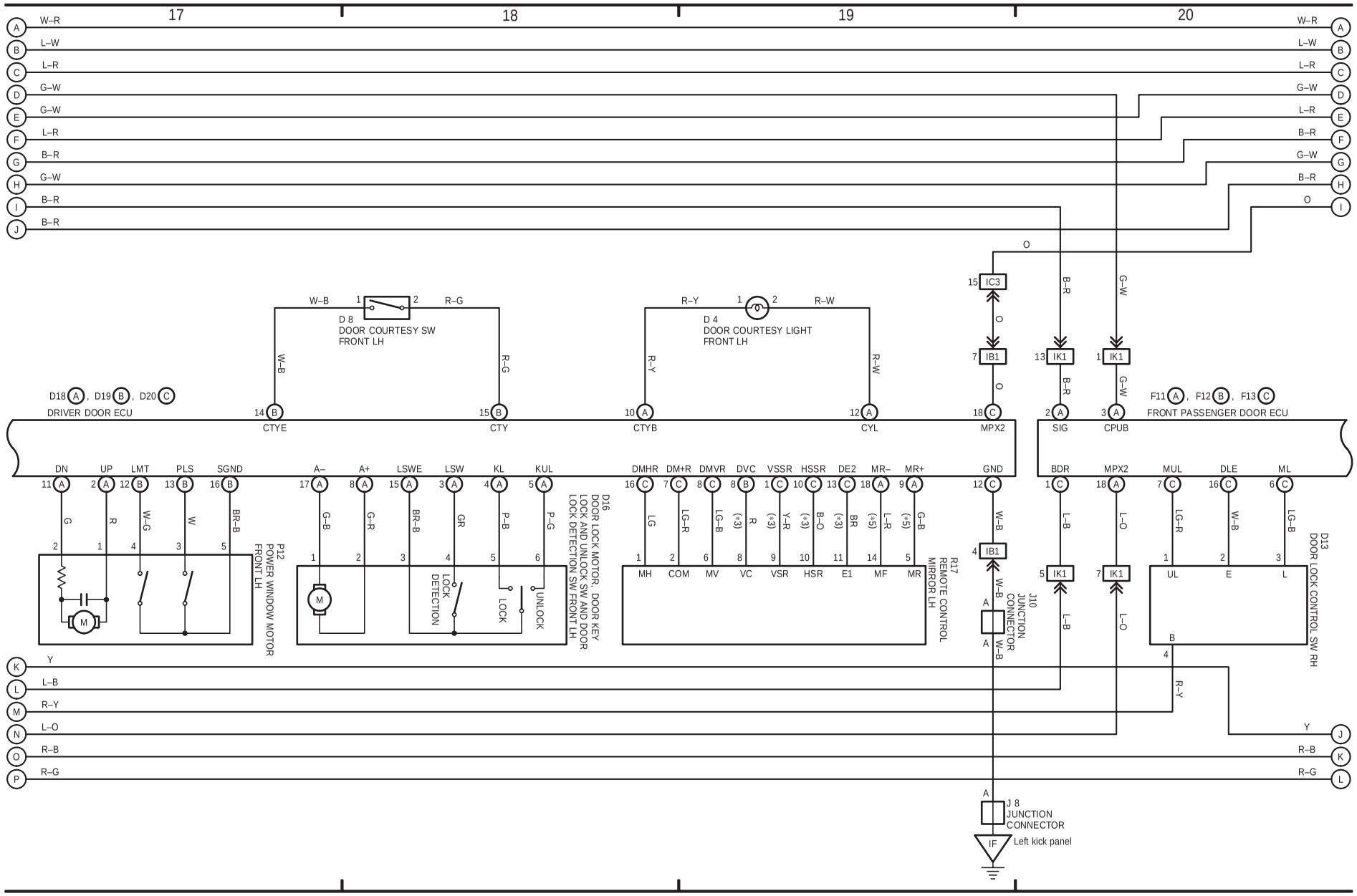

(Cont. next page)

Multiplex Communication System (LHD)

* 3 : w/ Driving Position Memory
* 5 : G. C. C.

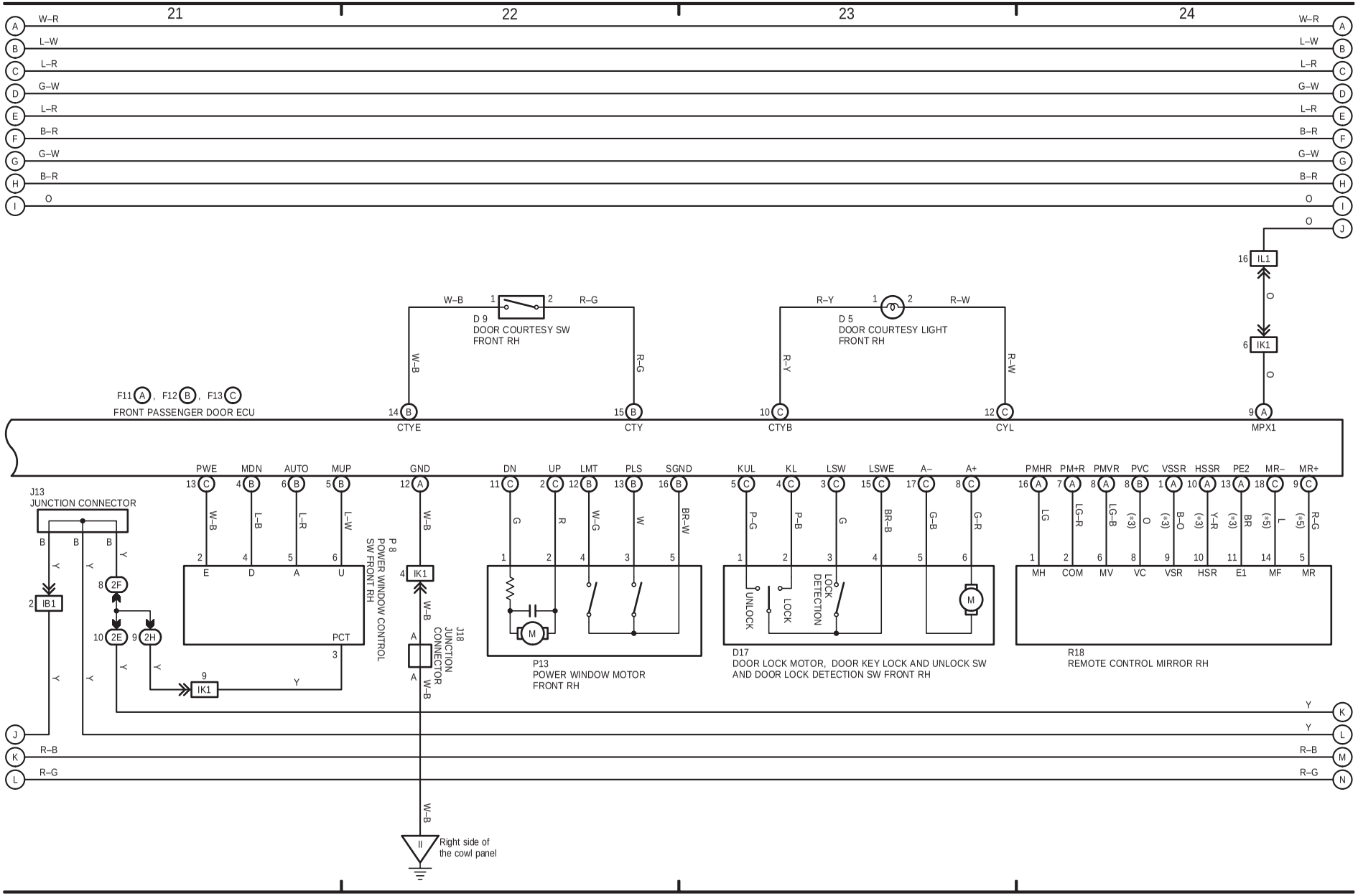

(Cont. next page)

Multiplex Communication System (LHD)

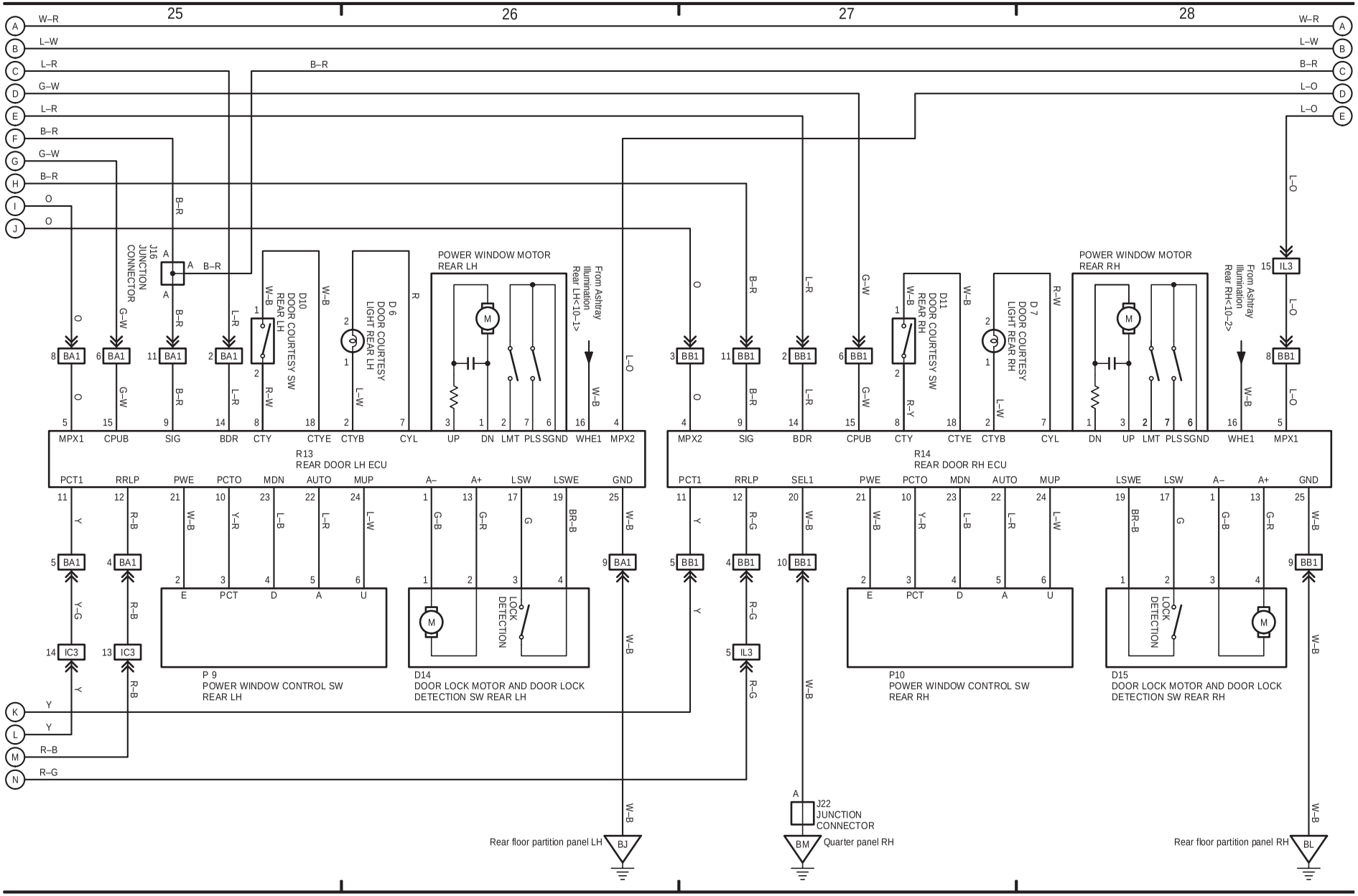

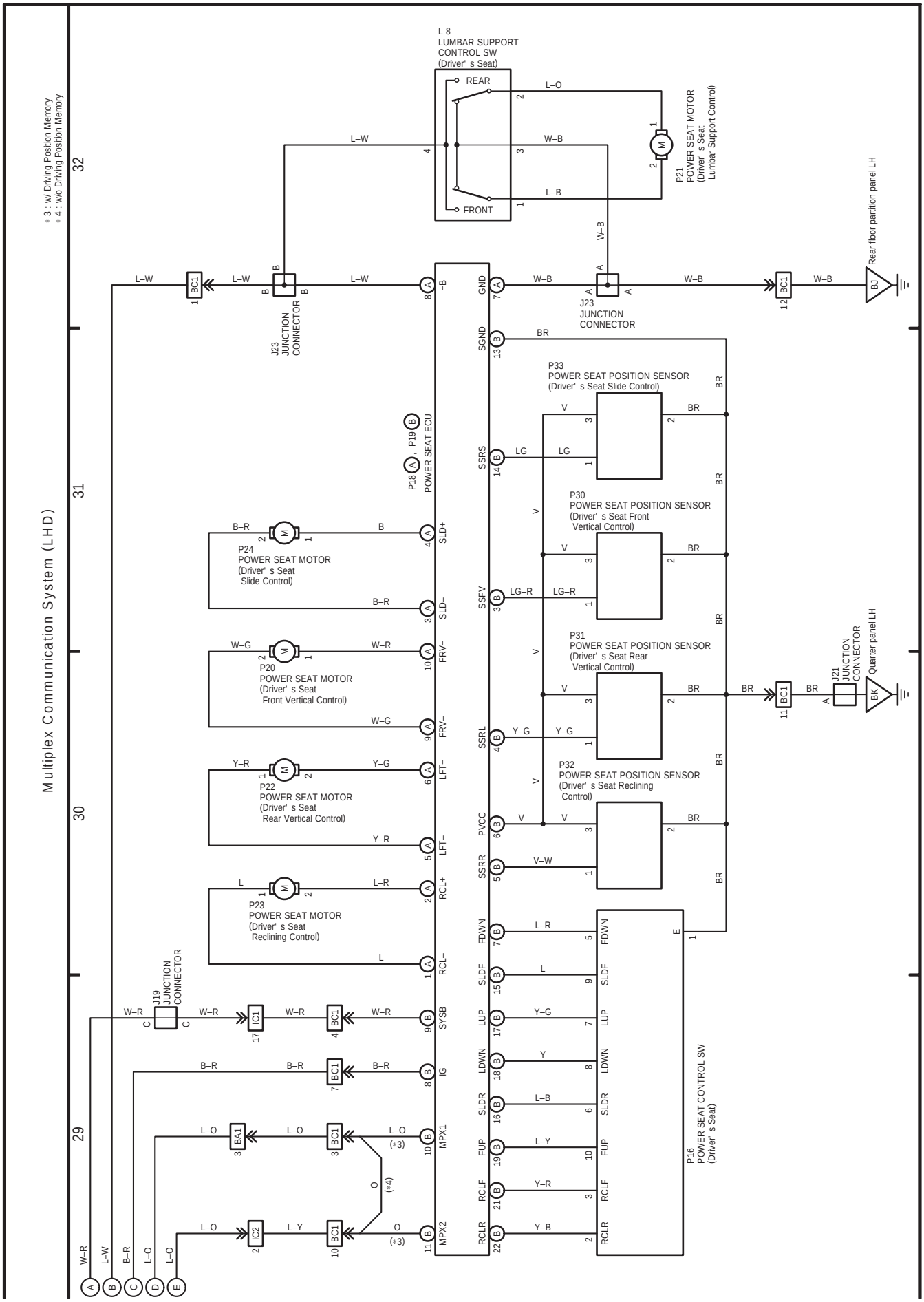
Multiplex Communication System (LHD)
* 3 : w/ Driving Position Memory
* 4 : w/o Driving Position Memory
L 8
LUMBAR SUPPORT
CONTROL SW
(Driver' s Seat)
REAR
FRONT
P21
POWER SEAT MOTOR
(Driver' s Seat
Lumbar Support Control)
J23
JUNCTION
CONNECTOR
Rear floor partition panel LH
P33
POWER SEAT POSITION SENSOR
(Driver' s Seat Slide Control)
P30
POWER SEAT POSITION SENSOR
(Driver' s Seat Front
Vertical Control)
P31
POWER SEAT POSITION SENSOR
(Driver' s Seat Rear
Vertical Control)
P32
POWER SEAT POSITION SENSOR
(Driver' s Seat Reclining
Control)
P18 , P19
POWER SEAT ECU
P24
POWER SEAT MOTOR
(Driver' s Seat
Slide Control)
P20
POWER SEAT MOTOR
(Driver' s Seat
Front Vertical Control)
P22
POWER SEAT MOTOR
(Driver' s Seat
Rear Vertical Control)
P23
POWER SEAT MOTOR
(Driver' s Seat
Reclining Control)
J21
JUNCTION
CONNECTOR
Quarter panel LH
J19
JUNCTION
CONNECTOR
P16
POWER SEAT CONTROL SW
(Driver' s Seat)
GND
SGND
SSRS
SSFV
SSRL
PVCC
SSRR
FDWN
SLDF
LUP
LDWN
SLDR
FUP
RCLF
RCLR
+B
SLD+
SLD–
FRV+
FRV–
LFT+
LFT–
RCL+
RCL–
SYSB
IG
MPX1
MPX2
BC1
BA1
IC1
IC2
BJ
BK
32
31
30
29