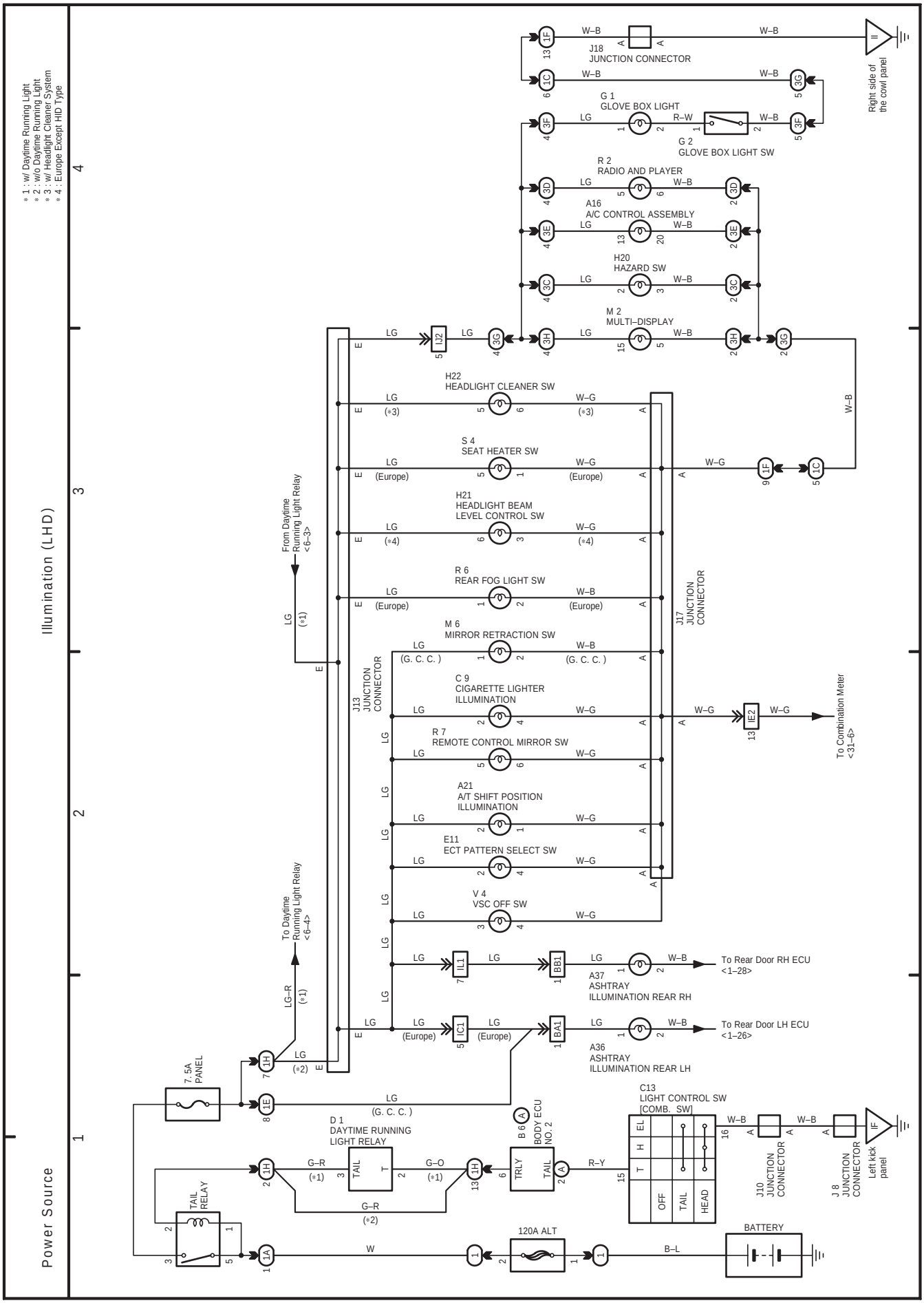
Power Source
Illumination (LHD)
* 1 : w/ Daytime Running Light
* 2 : w/o Daytime Running Light
* 3 : w/ Headlight Cleaner System
* 4 : Europe Except HID Type
J18
JUNCTION CONNECTOR
Right side of the cowl panel
G 1
GLOVE BOX LIGHT
G 2
GLOVE BOX LIGHT SW
R 2
RADIO AND PLAYER
A16
A/C CONTROL ASSEMBLY
H20
HAZARD SW
M 2
MULTI–DISPLAY
H22
HEADLIGHT CLEANER SW
S 4
SEAT HEATER SW
H21
HEADLIGHT BEAM
LEVEL CONTROL SW
R 6
REAR FOG LIGHT SW
M 6
MIRROR RETRACTION SW
C 9
CIGARETTE LIGHTER
ILLUMINATION
R 7
REMOTE CONTROL MIRROR SW
A21
A/T SHIFT POSITION
ILLUMINATION
E11
ECT PATTERN SELECT SW
V 4
VSC OFF SW
J17
JUNCTION
CONNECTOR
J13
JUNCTION
CONNECTOR
From Daytime Running Light Relay <6–3>
To Daytime Running Light Relay <6–4>
To Combination Meter <31–6>
To Rear Door RH ECU <1–28>
A37
ASHTRAY
ILLUMINATION REAR RH
To Rear Door LH ECU <1–26>
A36
ASHTRAY
ILLUMINATION REAR LH
7.5A
PANEL
TAIL
RELAY
D 1
DAYTIME RUNNING
LIGHT RELAY
B 6
BODY ECU
NO. 2
C13
LIGHT CONTROL SW
[COMB. SW]
OFF
TAIL
HEAD
J10
JUNCTION
CONNECTOR
J 8
JUNCTION
CONNECTOR
Left kick panel
120A ALT
BATTERY