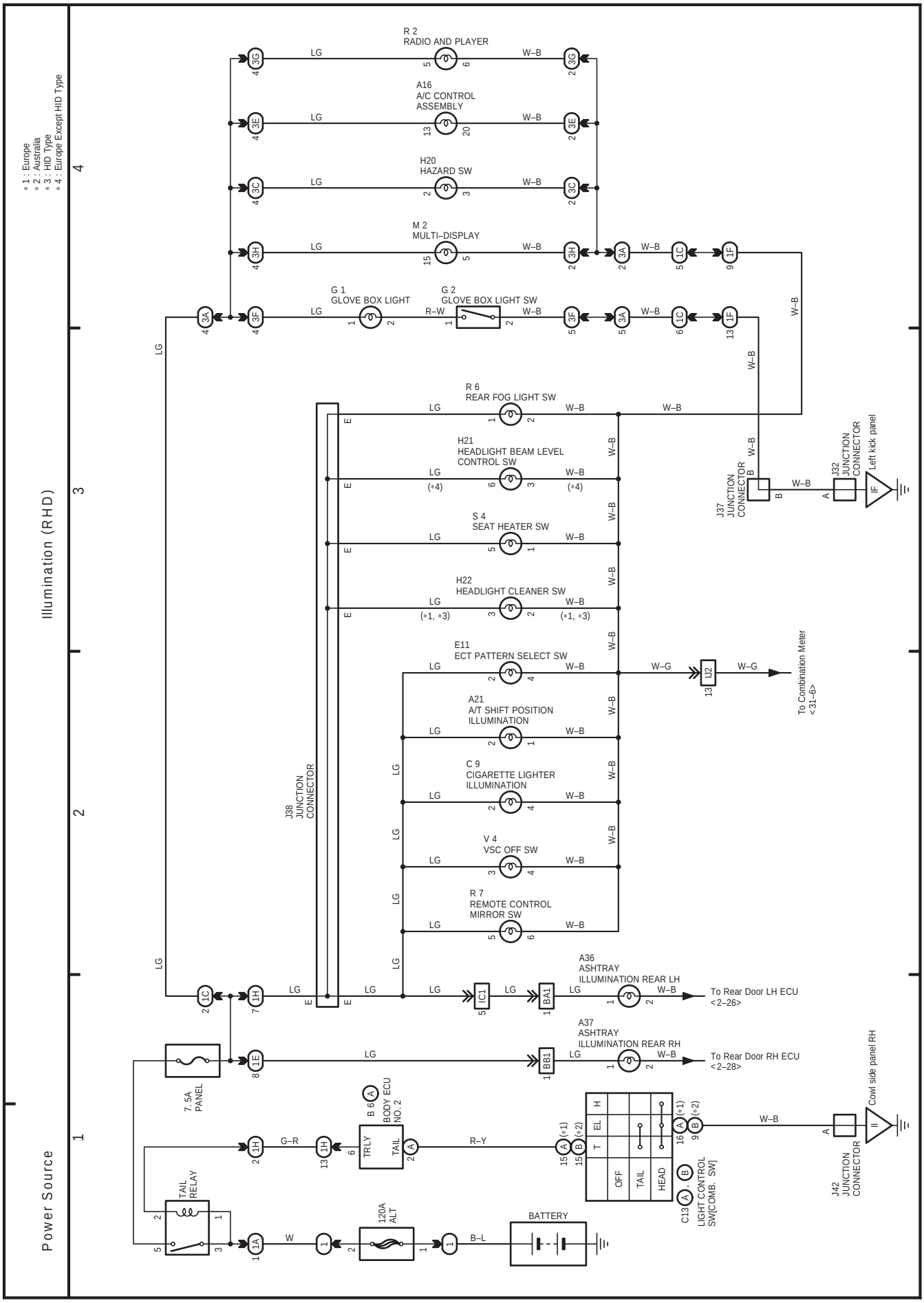
Power Source
Illumination (RHD)
∗1 : Europe
∗2 : Australia
∗3 : HID Type
∗4 : Europe Except HID Type
R 2
RADIO AND PLAYER
A16
A/C CONTROL
ASSEMBLY
H20
HAZARD SW
M 2
MULTI–DISPLAY
G 1
GLOVE BOX LIGHT
G 2
GLOVE BOX LIGHT SW
R 6
REAR FOG LIGHT SW
H21
HEADLIGHT BEAM LEVEL
CONTROL SW
S 4
SEAT HEATER SW
H22
HEADLIGHT CLEANER SW
E11
ECT PATTERN SELECT SW
A21
A/T SHIFT POSITION
ILLUMINATION
C 9
CIGARETTE LIGHTER
ILLUMINATION
V 4
VSC OFF SW
R 7
REMOTE CONTROL
MIRROR SW
J38
JUNCTION
CONNECTOR
J37
JUNCTION
CONNECTOR
J32
JUNCTION
CONNECTOR
Left kick panel
To Combination Meter
<31–6>
A36
ASHTRAY
ILLUMINATION REAR LH
To Rear Door LH ECU
<2–26>
A37
ASHTRAY
ILLUMINATION REAR RH
To Rear Door RH ECU
<2–28>
7.5A
PANEL
TAIL
RELAY
B 6
BODY ECU
NO. 2
TRLY
TAIL
120A
ALT
BATTERY
LIGHT CONTROL
SW[COMB. SW]
OFF
TAIL
HEAD
J42
JUNCTION
CONNECTOR
Cowl side panel RH
LG
W–B
W–G
G–R
R–Y
W
B–L
R–W