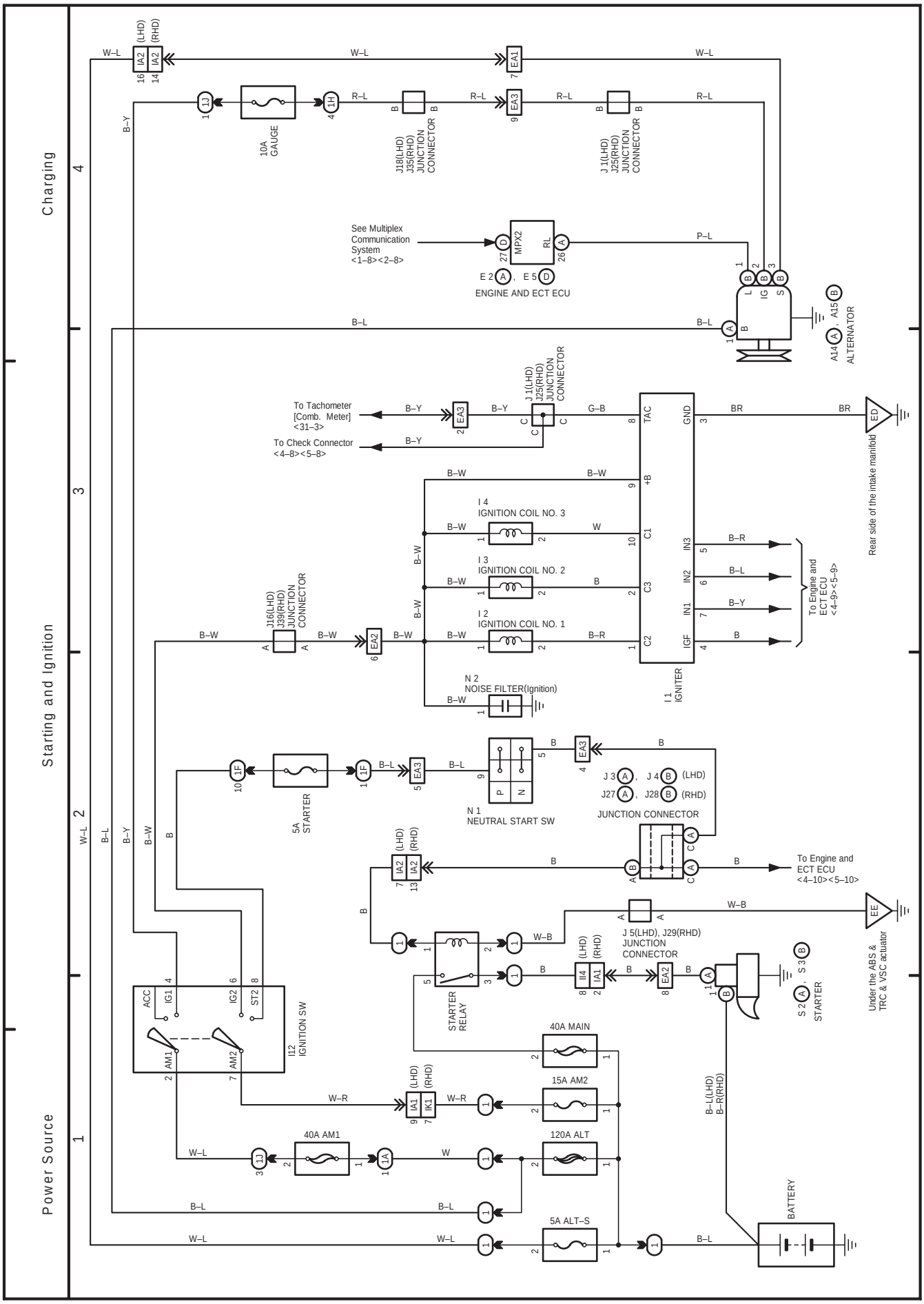
Charging
Starting and Ignition
Power Source
10A GAUGE
J18(LHD) J35(RHD) JUNCTION CONNECTOR
J 1(LHD) J25(RHD) JUNCTION CONNECTOR
See Multiplex Communication System <1–8><2–8>
MPX2
ENGINE AND ECT ECU
ALTERNATOR
To Tachometer [Comb. Meter] <31–3>
To Check Connector <4–8><5–8>
J 1(LHD) J25(RHD) JUNCTION CONNECTOR
Rear side of the intake manifold
I 4 IGNITION COIL NO. 3
I 3 IGNITION COIL NO. 2
I 2 IGNITION COIL NO. 1
J16(LHD) J39(RHD) JUNCTION CONNECTOR
N 2 NOISE FILTER(Ignition)
I 1 IGNITER
To Engine and ECT ECU <4–9><5–9>
5A STARTER
N 1 NEUTRAL START SW
JUNCTION CONNECTOR
To Engine and ECT ECU <4–10><5–10>
J 5(LHD), J29(RHD) JUNCTION CONNECTOR
Under the ABS & TRC & VSC actuator
STARTER RELAY
STARTER
I12 IGNITION SW
40A MAIN
15A AM2
40A AM1
120A ALT
5A ALT–S
BATTERY