(Cont. next page)

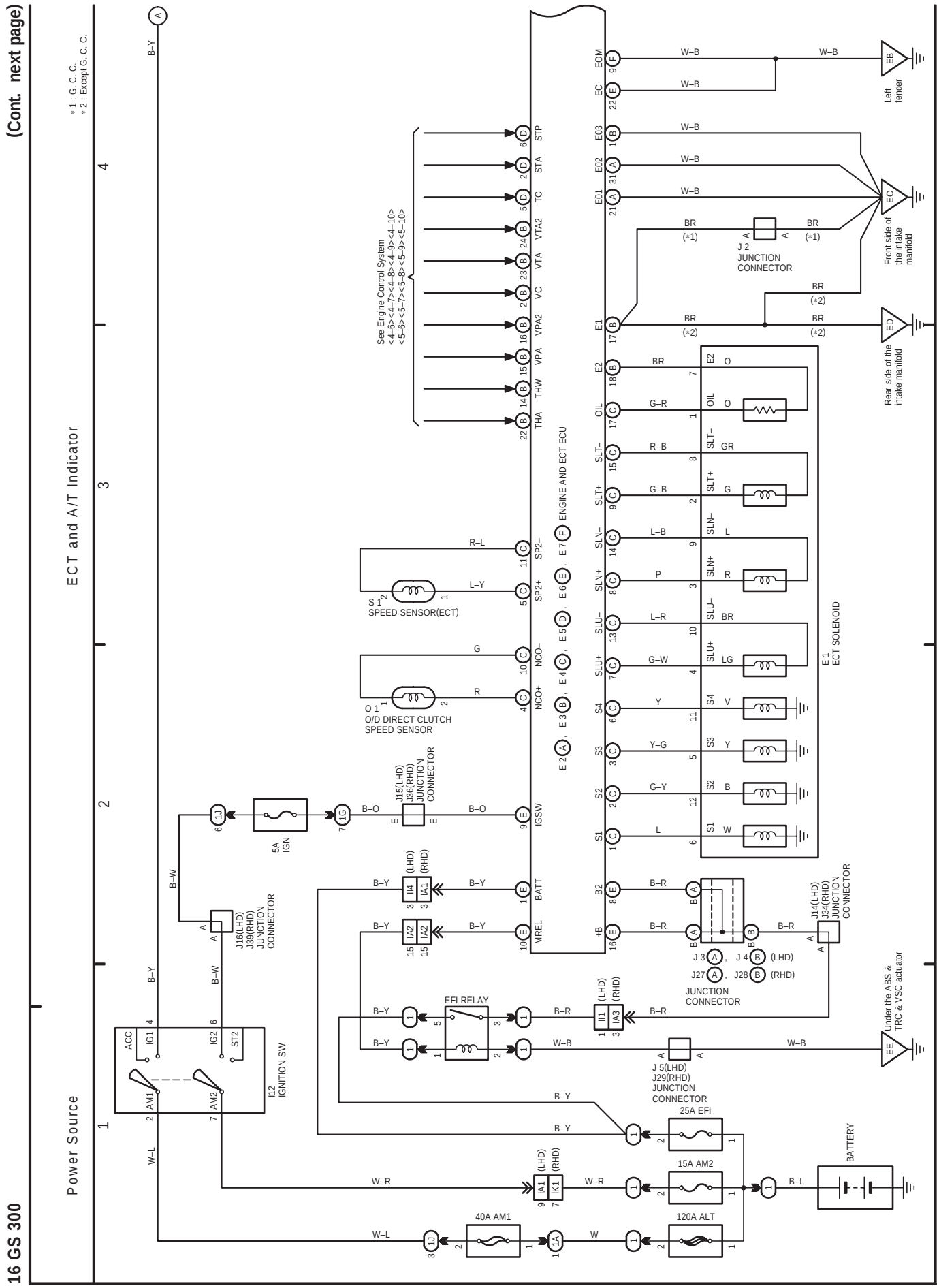

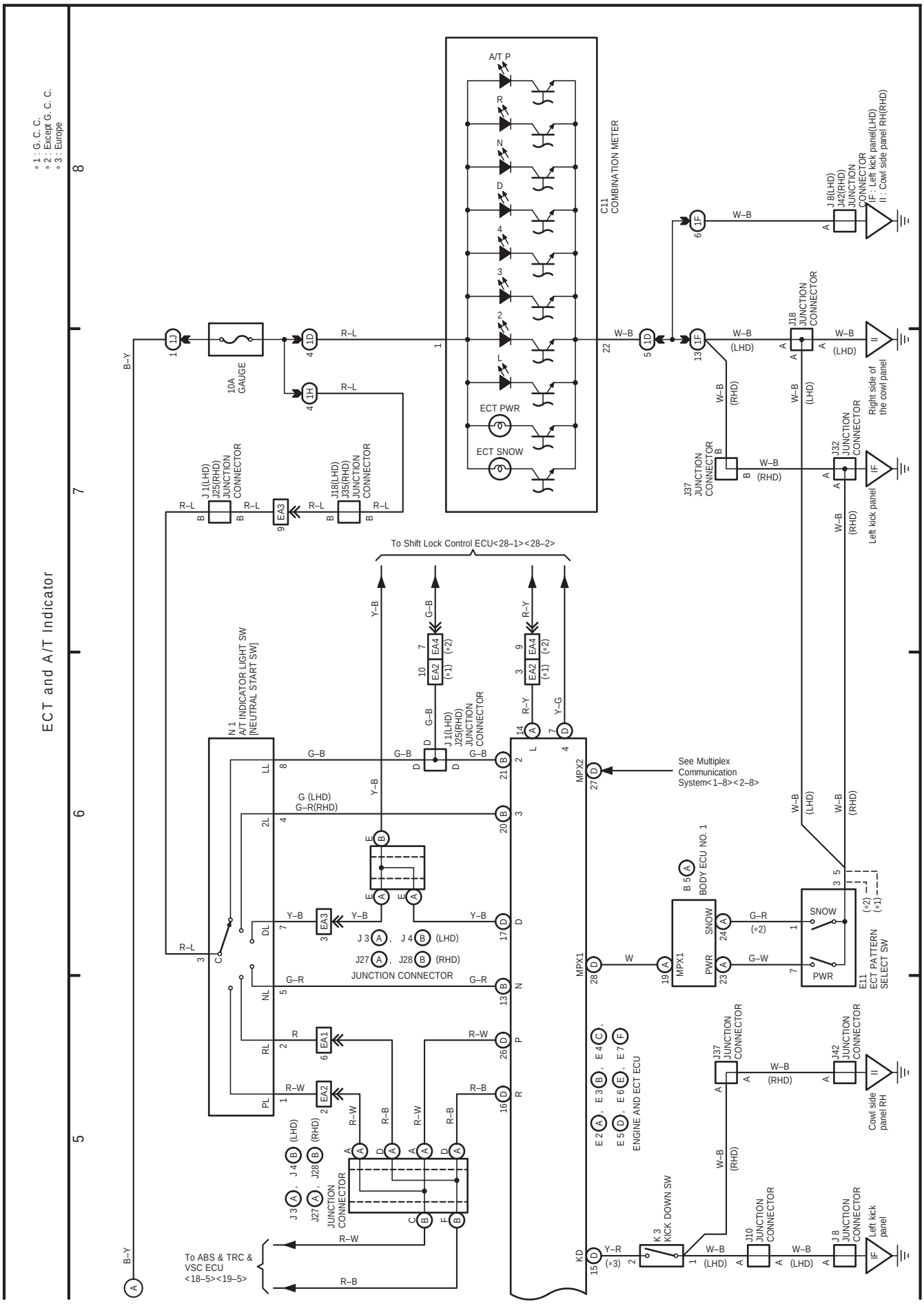
ECT and A/T Indicator
* 1 : G. C. C.
* 2 : Except G. C. C.
* 3 : Europe
C11
COMBINATION METER
A/T P
R
N
D
4
3
2
L
ECT PWR
ECT SNOW
10A
GAUGE
J 8(LHD)
J42(RHD)
JUNCTION
CONNECTOR
IF : Left kick panel(LHD)
II : Cowl side panel RH(RHD)
J18
JUNCTION
CONNECTOR
Right side of
the cowl panel
J32
JUNCTION
CONNECTOR
Left kick panel
J37
JUNCTION
CONNECTOR
J 1(LHD)
J25(RHD)
JUNCTION
CONNECTOR
J18(LHD)
J35(RHD)
JUNCTION
CONNECTOR
To Shift Lock Control ECU<28–1><28–2>
N 1
A/T INDICATOR LIGHT SW
[NEUTRAL START SW]
G (LHD)
G–R(RHD)
See Multiplex
Communication
System<1–8><2–8>
B 5
BODY ECU NO. 1
MPX1
MPX2
SNOW
PWR
E11
ECT PATTERN
SELECT SW
J 3 , J 4 (LHD)
J27 , J28 (RHD)
JUNCTION CONNECTOR
E 2 , E 3 , E 4 ,
E 5 , E 6 , E 7
ENGINE AND ECT ECU
K 3
KICK DOWN SW
J10
JUNCTION
CONNECTOR
J 8
JUNCTION
CONNECTOR
Left kick
panel
Cowl side
panel RH
To ABS & TRC &
VSC ECU
<18–5><19–5>