(Cont next page)

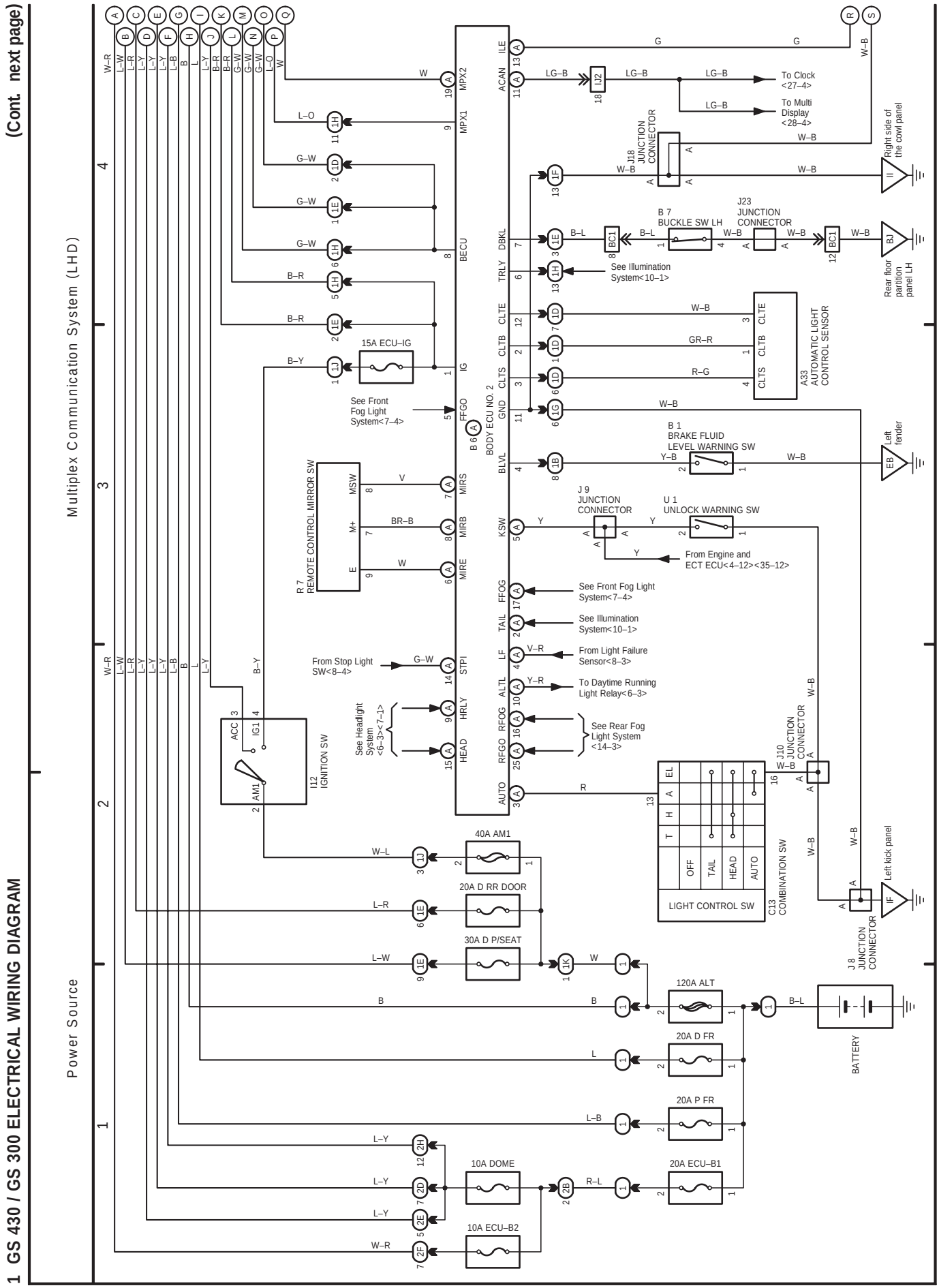

(Cont. next page)

Multiplex Communication System (LHD)

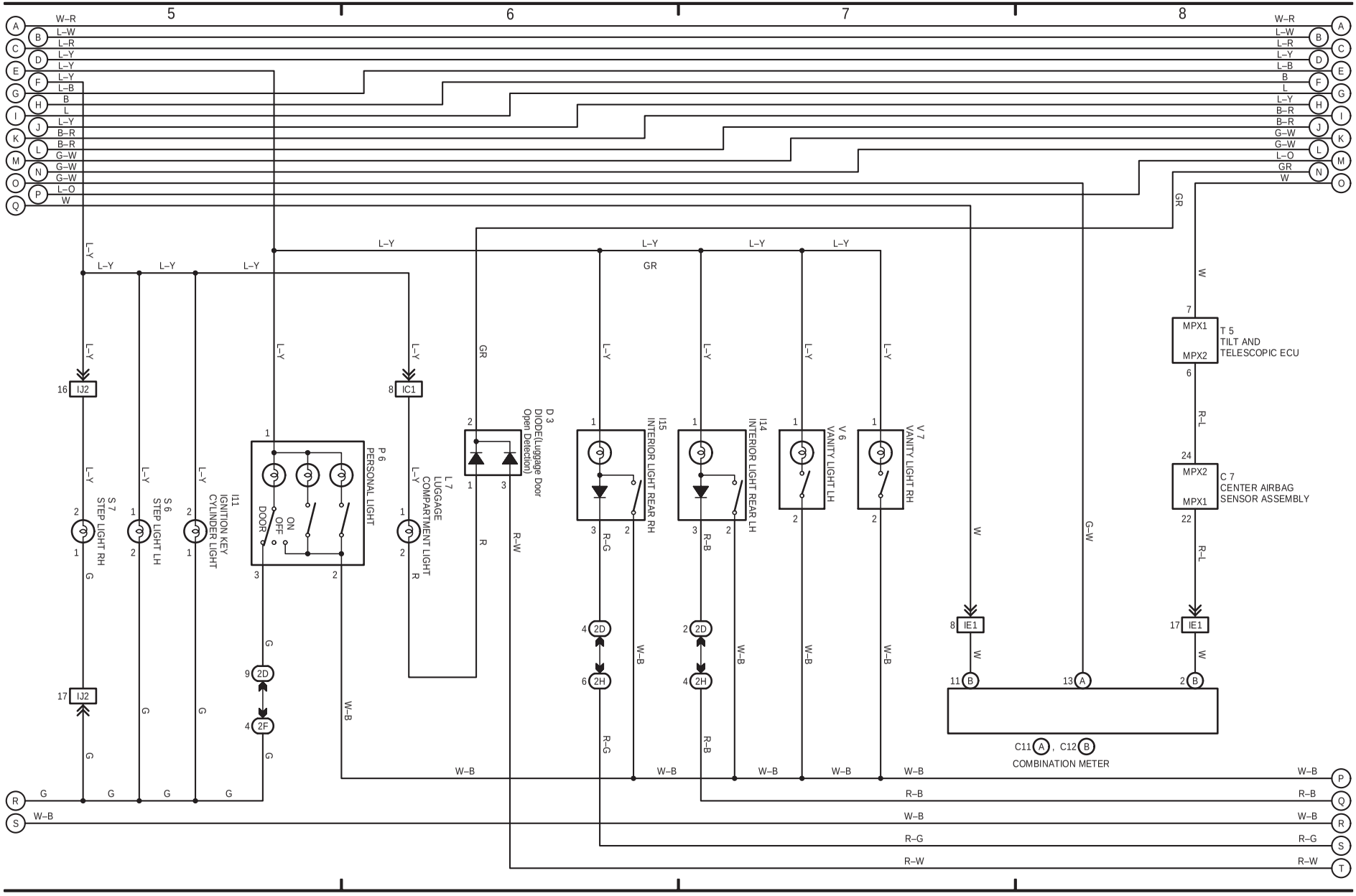

(Cont. next page)

Multiplex Communication System (LHD)

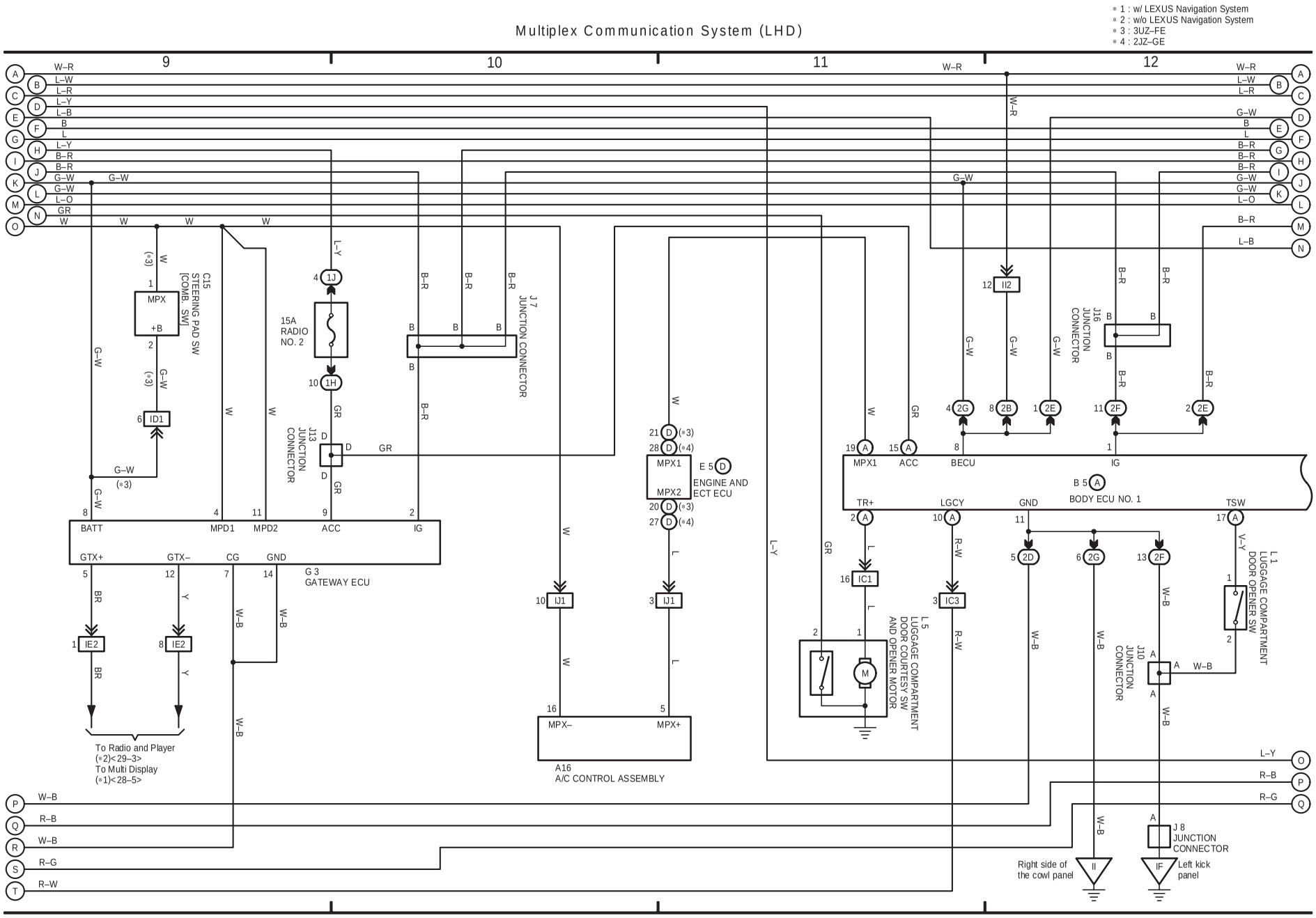

(Cont. next page)

Multiplex Communication System (LHD)

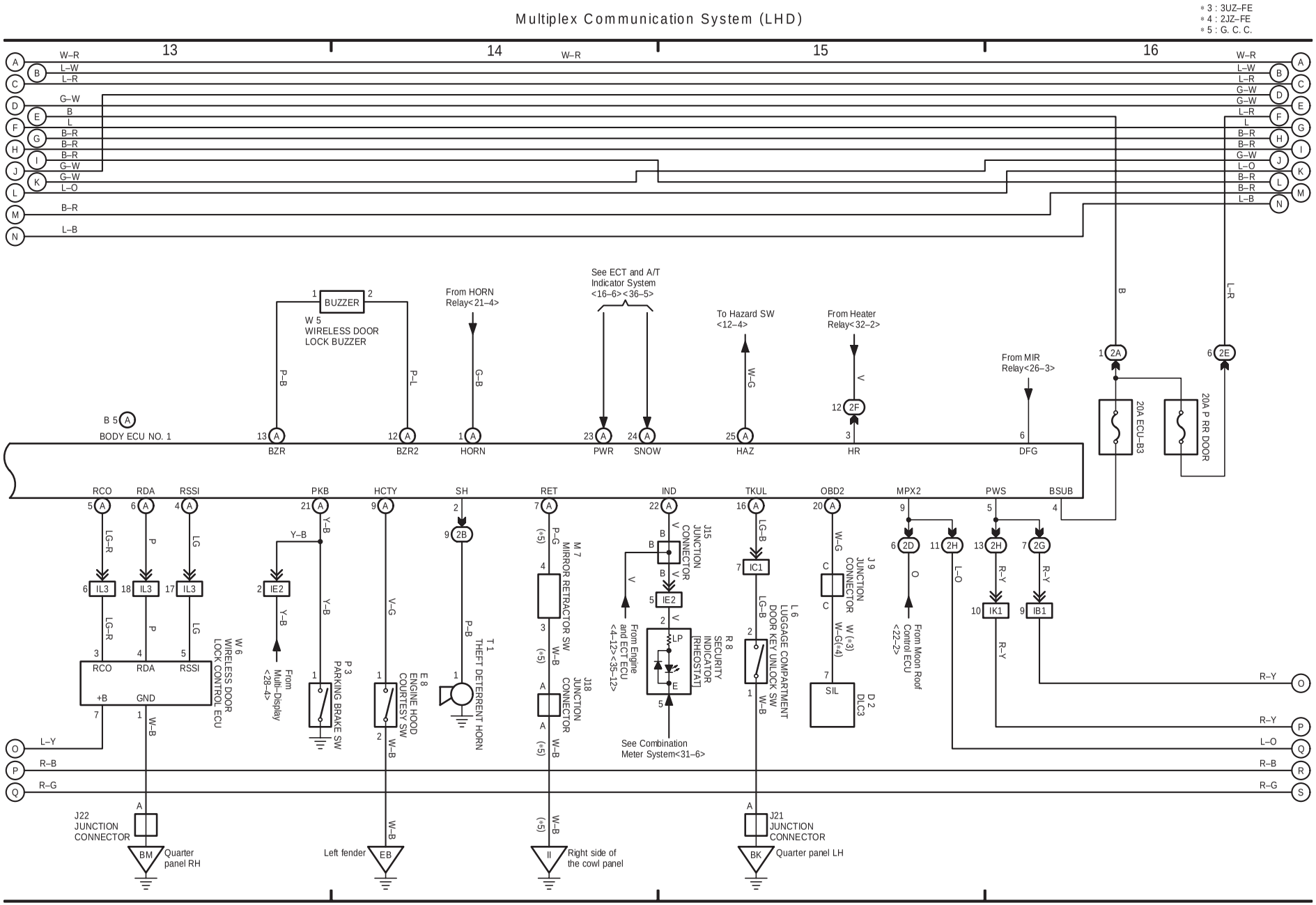

(Cont. next page)

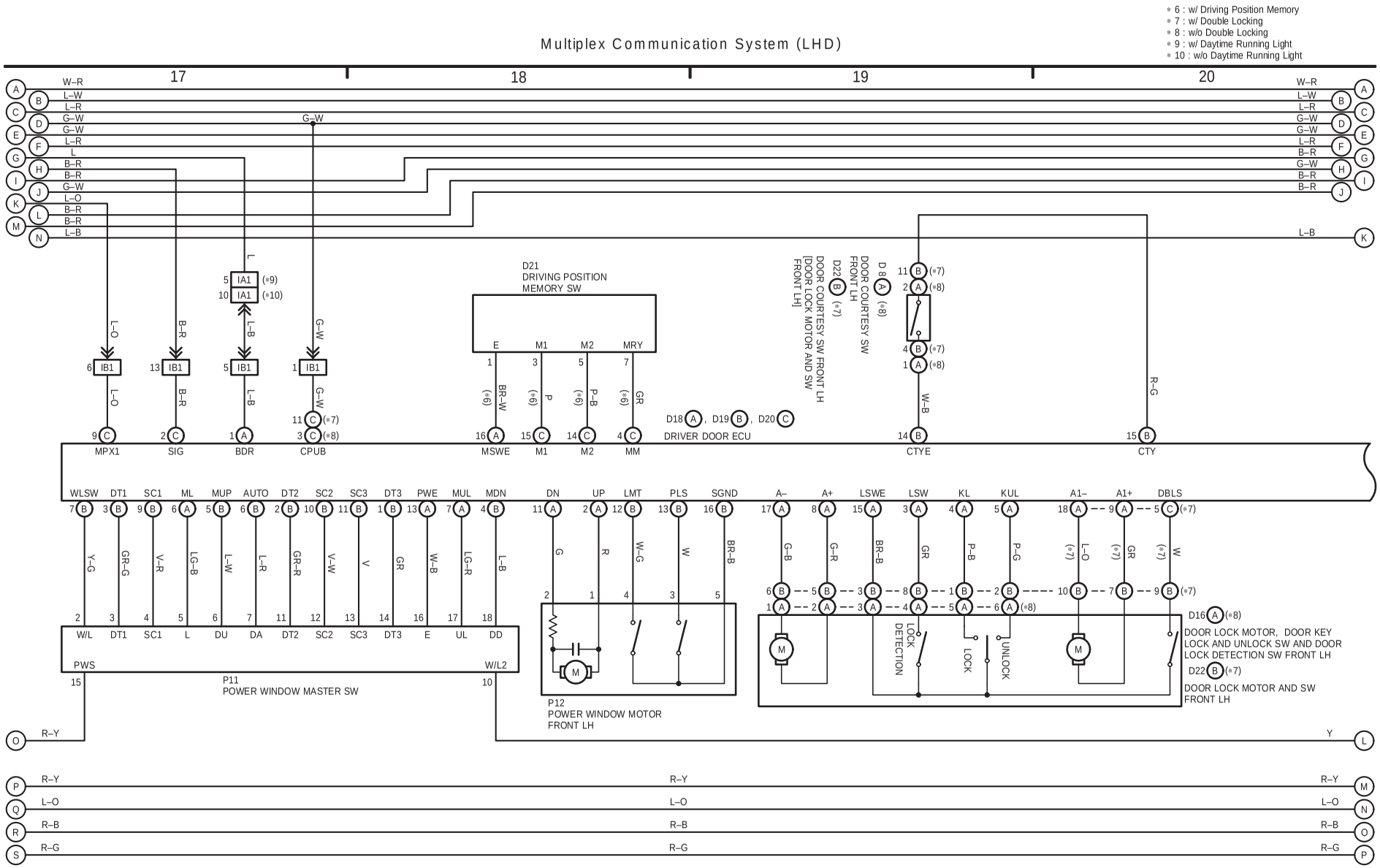

(Cont. next page)

Multiplex Communication System (LHD)

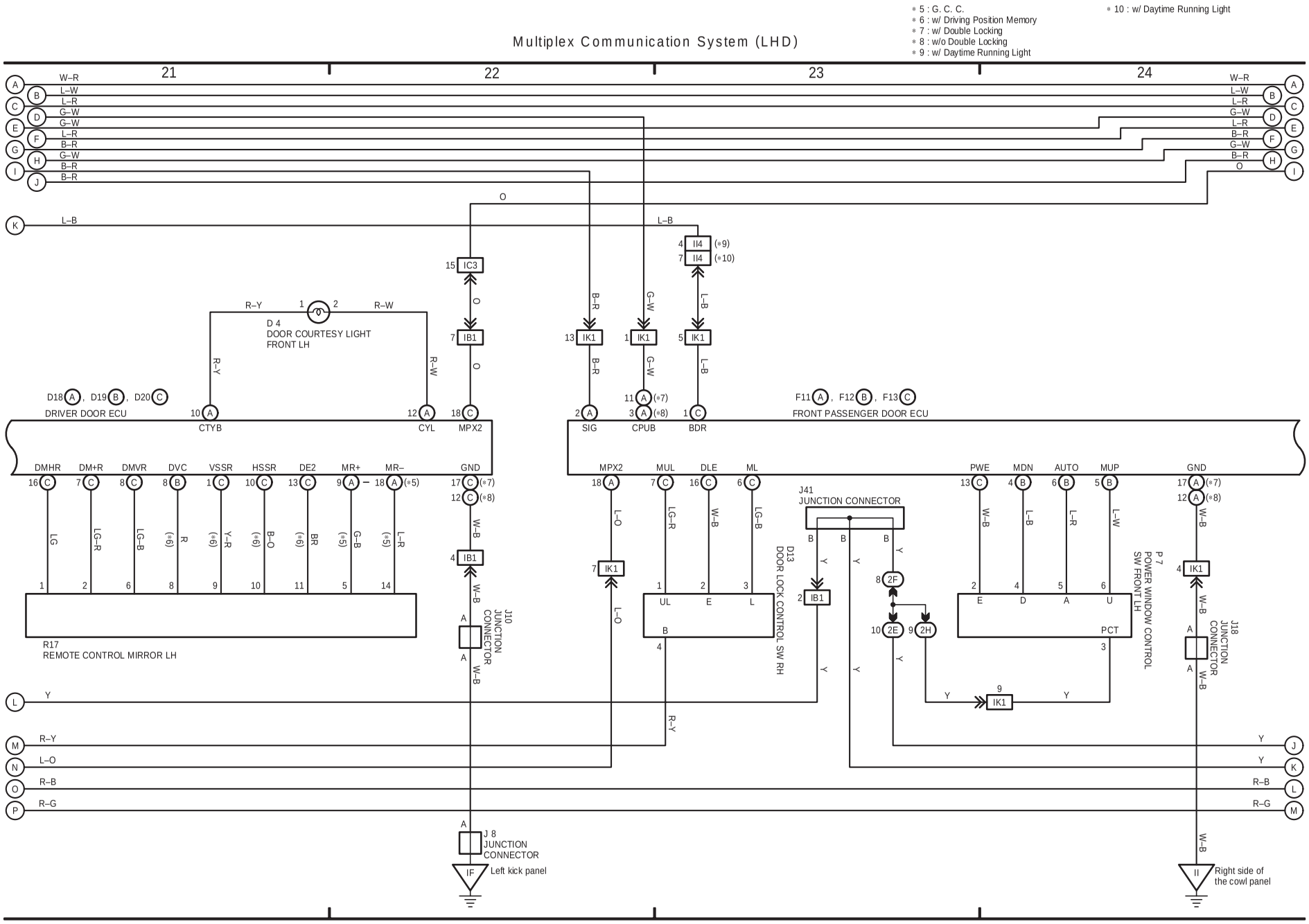

(Cont. next page)

* 5 : G. C. C.
* 6 : w/ Driving Position Memory
* 7 : w/ Double Locking
* 8 : w/o Double Locking

Multiplex Communication System (LHD)

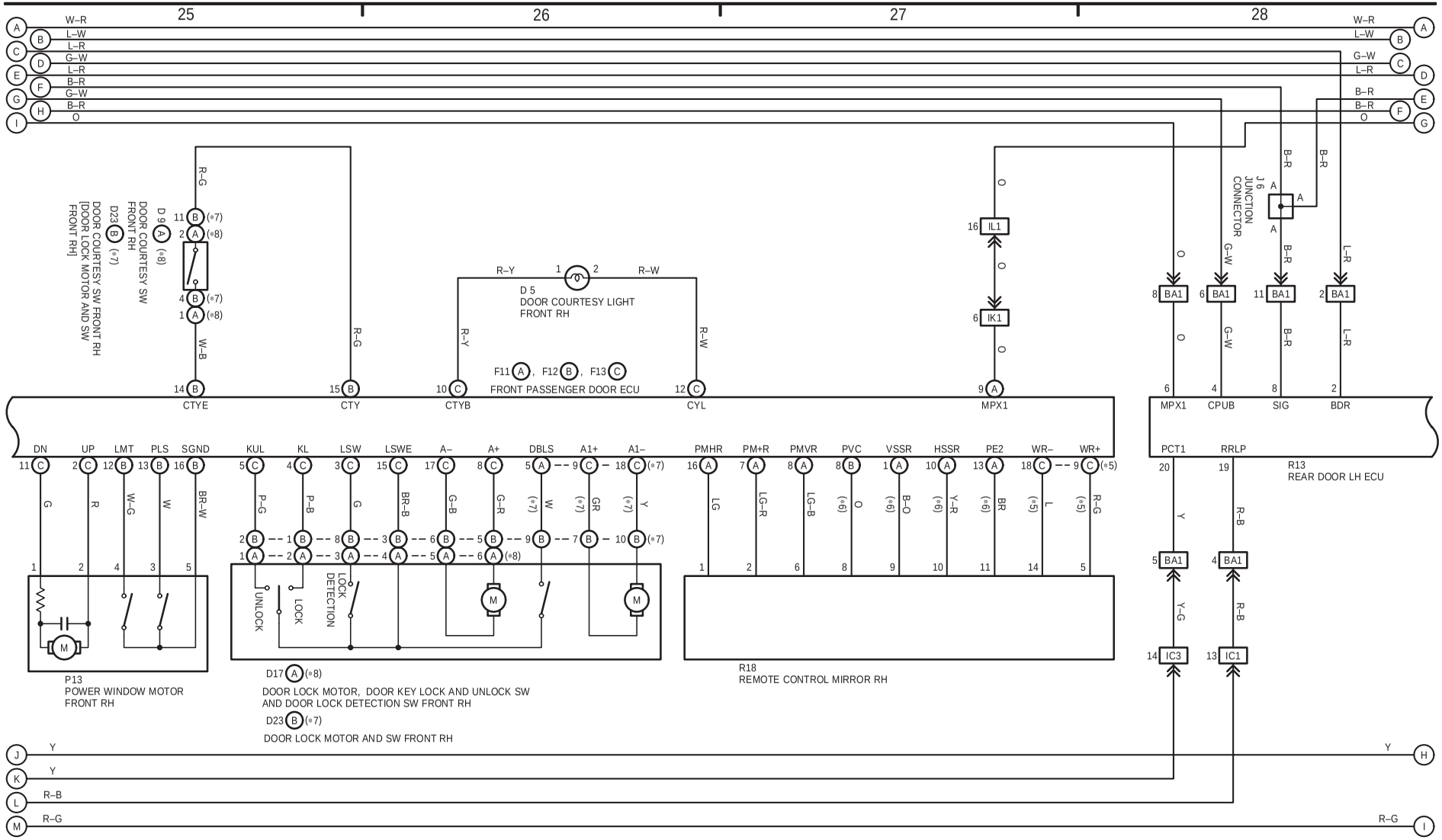

(Cont. next page)

Multiplex Communication System (LHD)

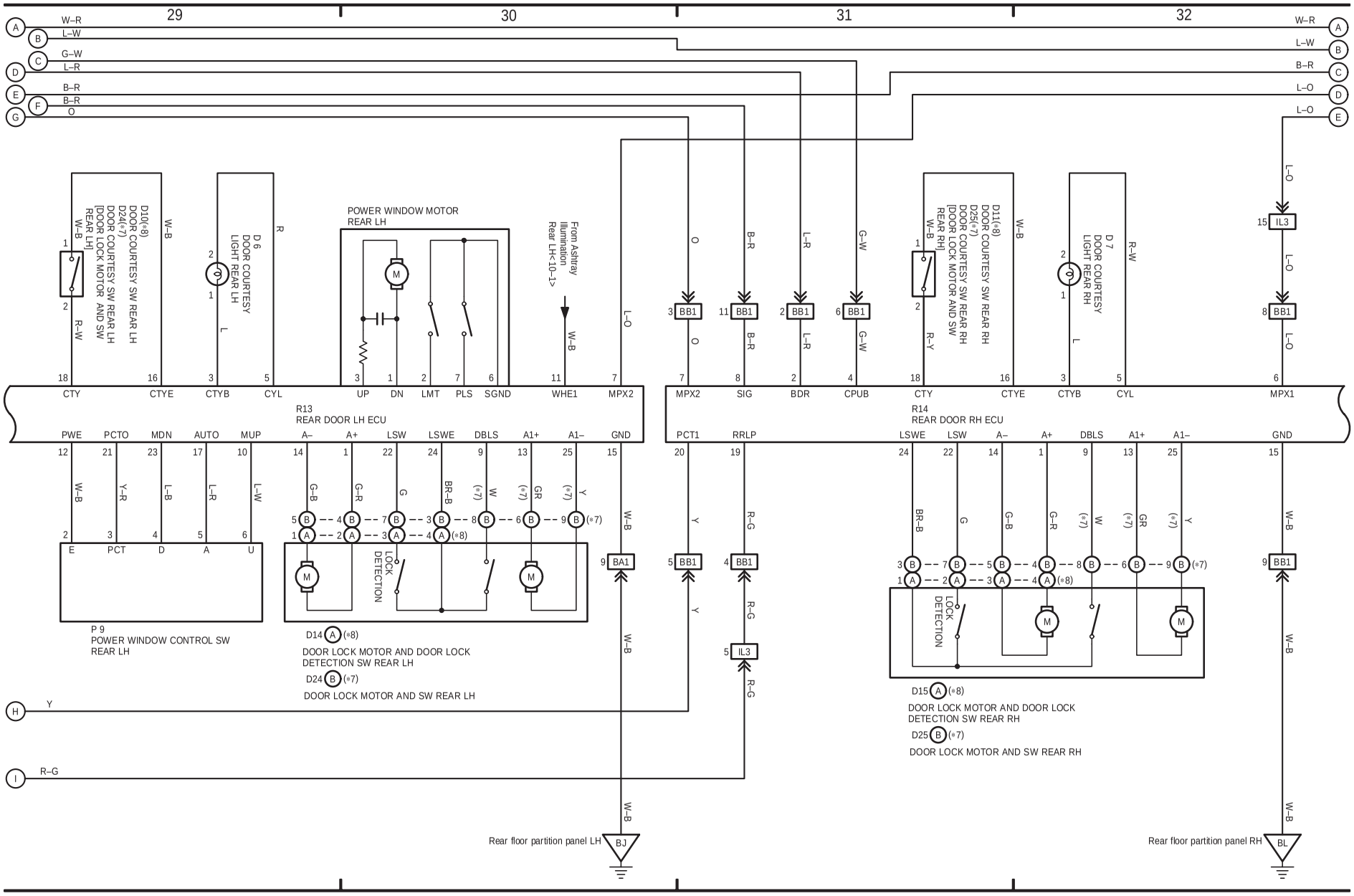

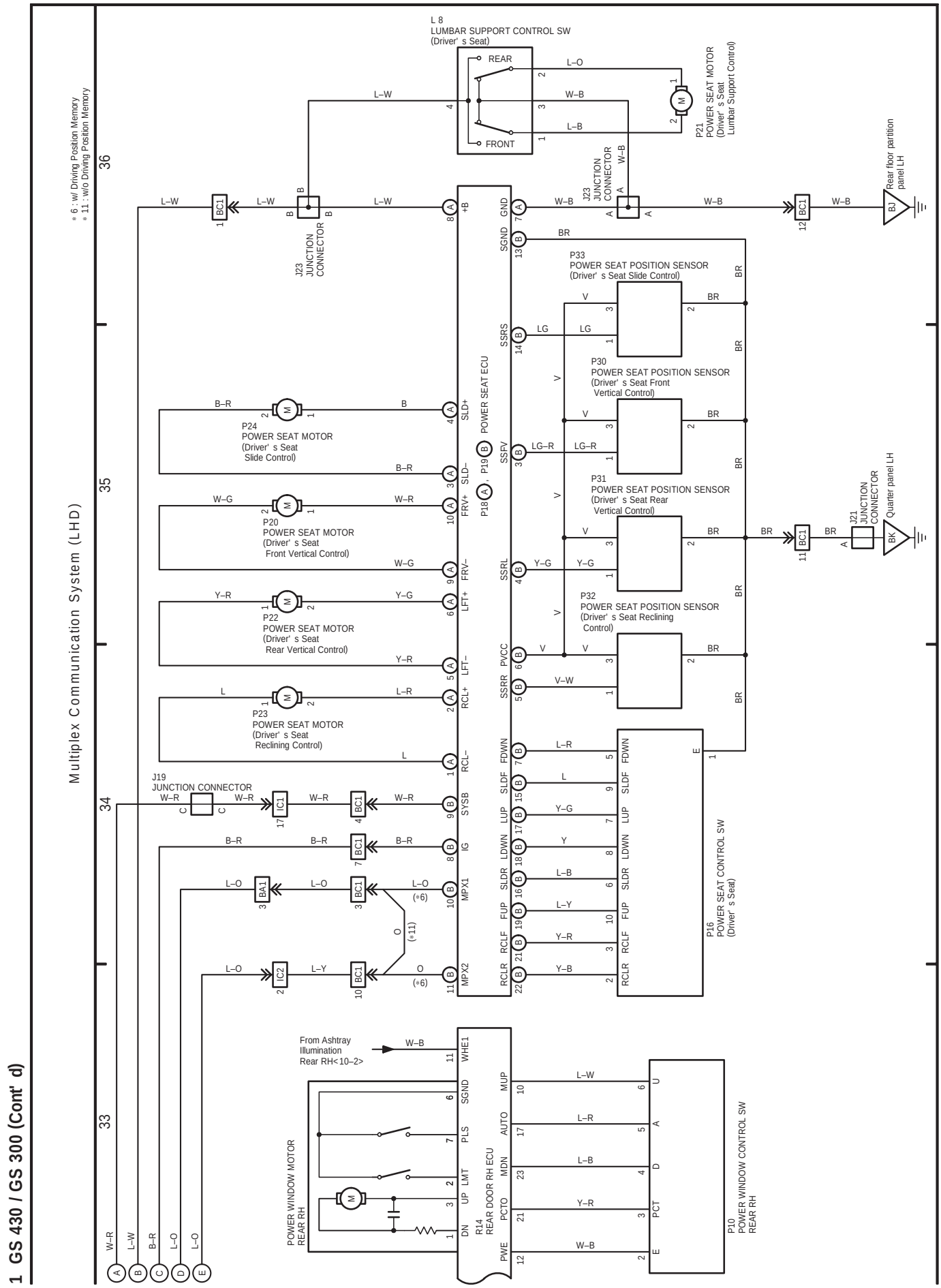
Multiplex Communication System (LHD)
* 6 : w/ Driving Position Memory
* 11 : w/o Driving Position Memory
L 8
LUMBAR SUPPORT CONTROL SW
(Driver' s Seat)
REAR
FRONT
P21
POWER SEAT MOTOR
(Driver' s Seat
Lumbar Support Control)
J23
JUNCTION
CONNECTOR
Rear floor partition
panel LH
P33
POWER SEAT POSITION SENSOR
(Driver' s Seat Slide Control)
P30
POWER SEAT POSITION SENSOR
(Driver' s Seat Front
Vertical Control)
P31
POWER SEAT POSITION SENSOR
(Driver' s Seat Rear
Vertical Control)
P32
POWER SEAT POSITION SENSOR
(Driver' s Seat Reclining
Control)
P24
POWER SEAT MOTOR
(Driver' s Seat
Slide Control)
P20
POWER SEAT MOTOR
(Driver' s Seat
Front Vertical Control)
P22
POWER SEAT MOTOR
(Driver' s Seat
Rear Vertical Control)
P23
POWER SEAT MOTOR
(Driver' s Seat
Reclining Control)
POWER SEAT ECU
P19
P18
J21
JUNCTION
CONNECTOR
Quarter panel LH
J19
JUNCTION CONNECTOR
P16
POWER SEAT CONTROL SW
(Driver' s Seat)
From Ashtray
Illumination
Rear RH<10–2>
POWER WINDOW MOTOR
REAR RH
R14
REAR DOOR RH ECU
P10
POWER WINDOW CONTROL SW
REAR RH
36
35
34
33