(Cont next page)

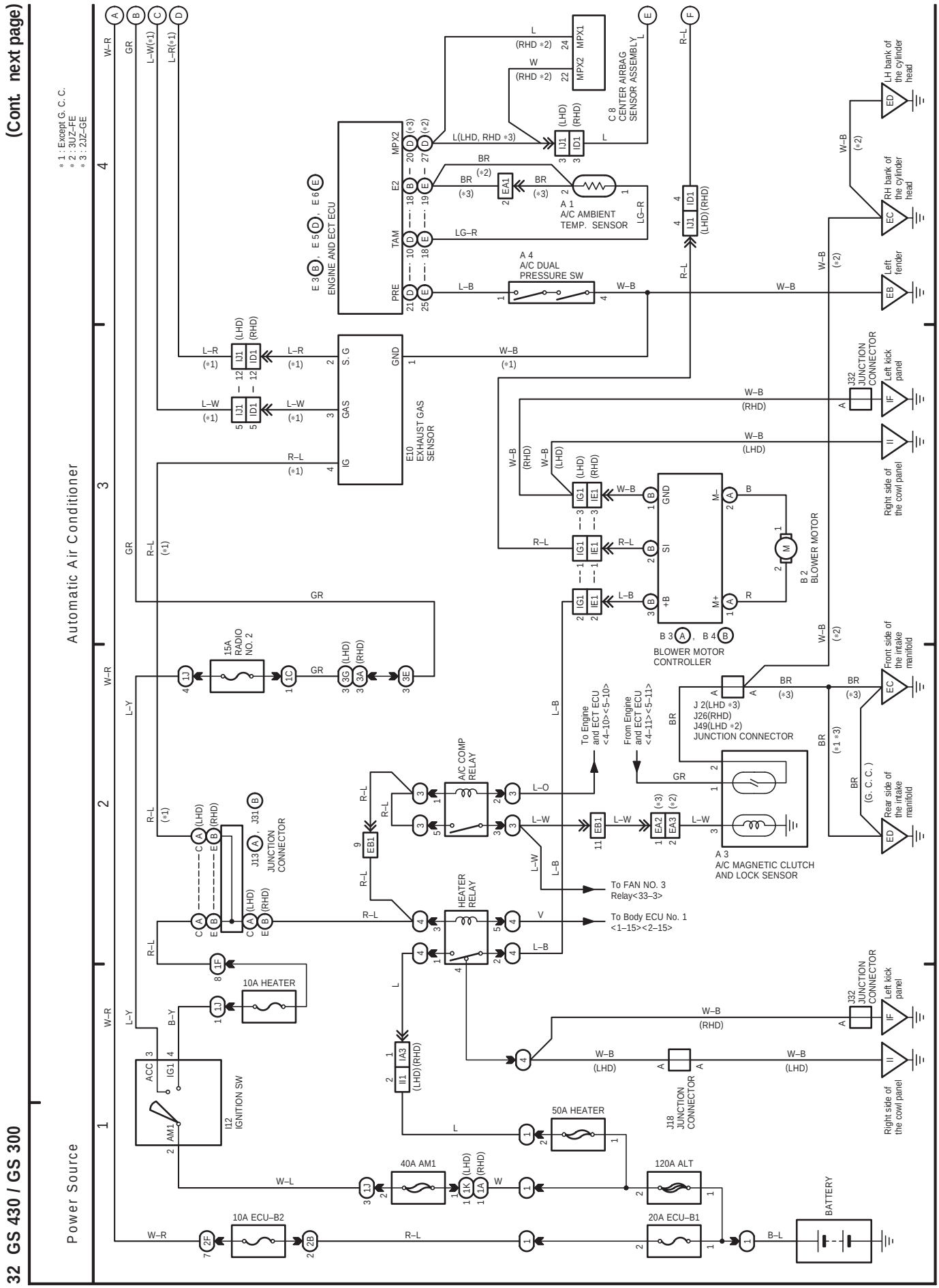

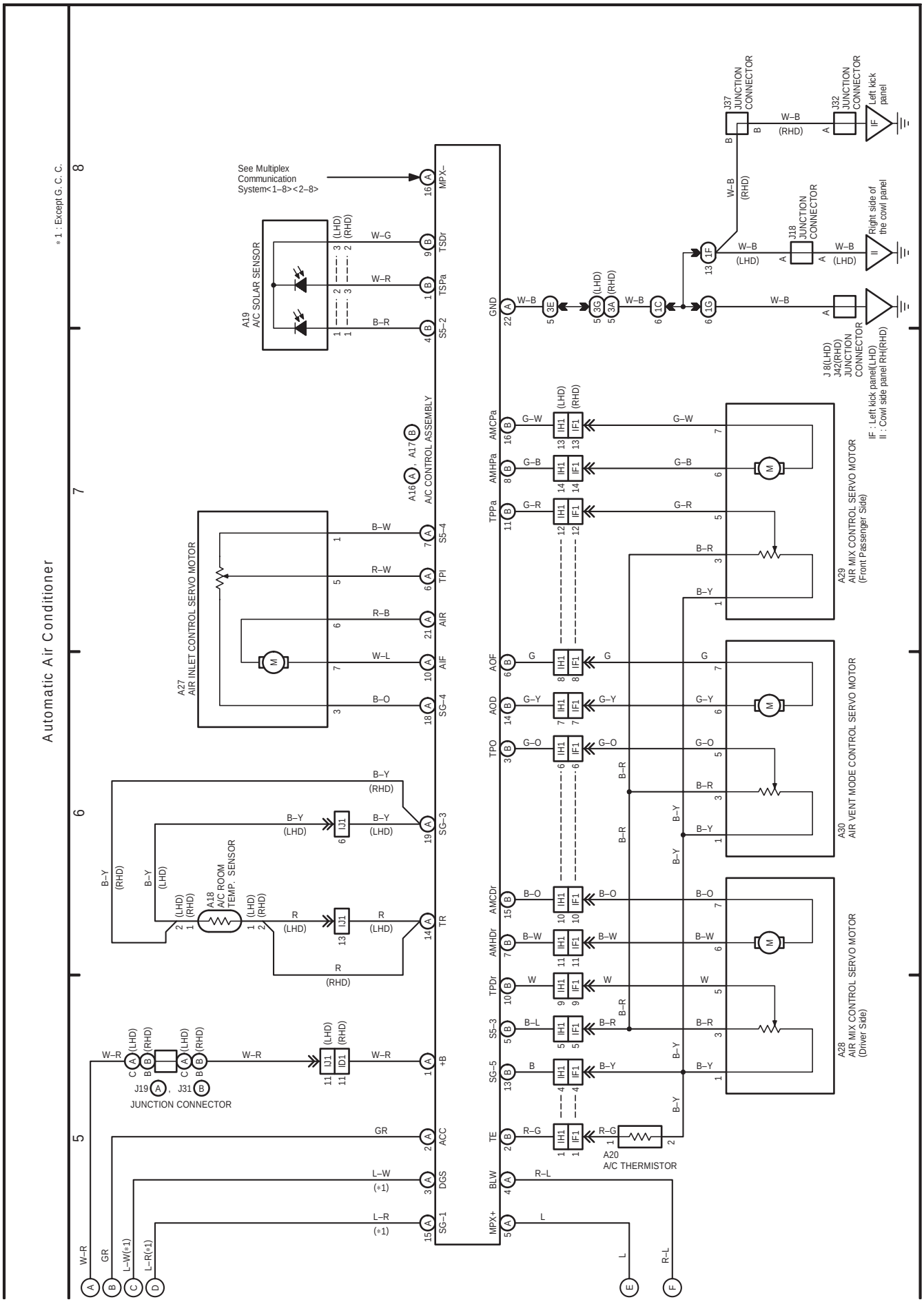
Automatic Air Conditioner
* 1 : Except G. C. C.
See Multiplex Communication System<1–8><2–8>
A19 A/C SOLAR SENSOR
A27 AIR INLET CONTROL SERVO MOTOR
A16 A, A17 B A/C CONTROL ASSEMBLY
A18 A/C ROOM TEMP. SENSOR
J19 A, J31 B JUNCTION CONNECTOR
A20 A/C THERMISTOR
A29 AIR MIX CONTROL SERVO MOTOR (Front Passenger Side)
A30 AIR VENT MODE CONTROL SERVO MOTOR
A28 AIR MIX CONTROL SERVO MOTOR (Driver Side)
J37 JUNCTION CONNECTOR
J32 JUNCTION CONNECTOR
J18 JUNCTION CONNECTOR
J8(LHD) J42(RHD) JUNCTION CONNECTOR
Left kick panel
Right side of the cowl panel
IF : Left kick panel(LHD)
II : Cowl side panel RH(RHD)
MPX–
TSDr
TSPa
S5–2
GND
AMCPa
AMHPa
TPPa
S5–4
TPI
AIR
AIF
SG–4
AOF
AOD
TPO
SG–3
TR
AMCDr
AMHDr
TPDr
S5–3
SG–5
TE
+B
ACC
DGS
SG–1
BLW
MPX+