OVERALL ELECTRICAL WIRING DIAGRAM

(Cont. next page)

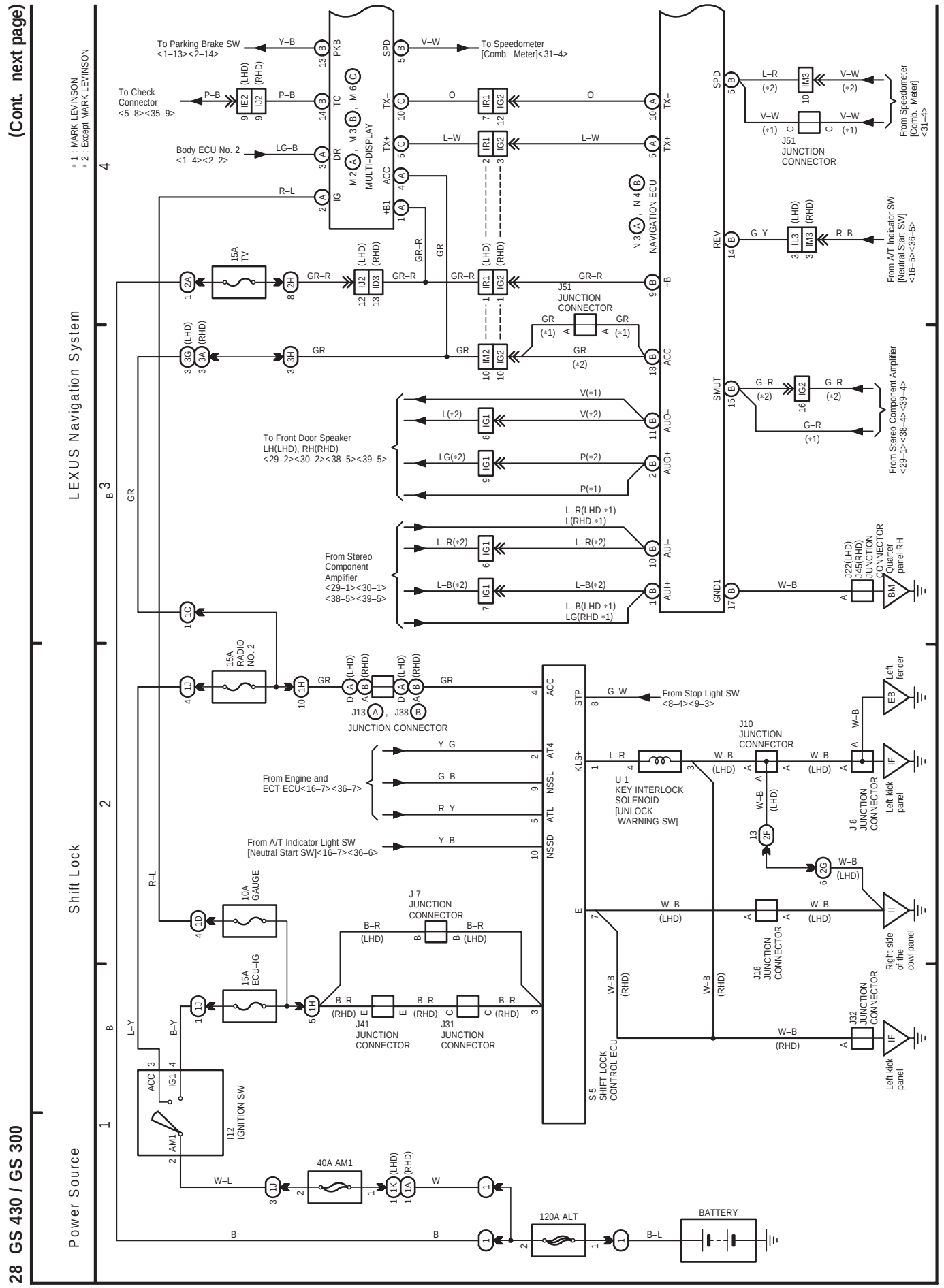

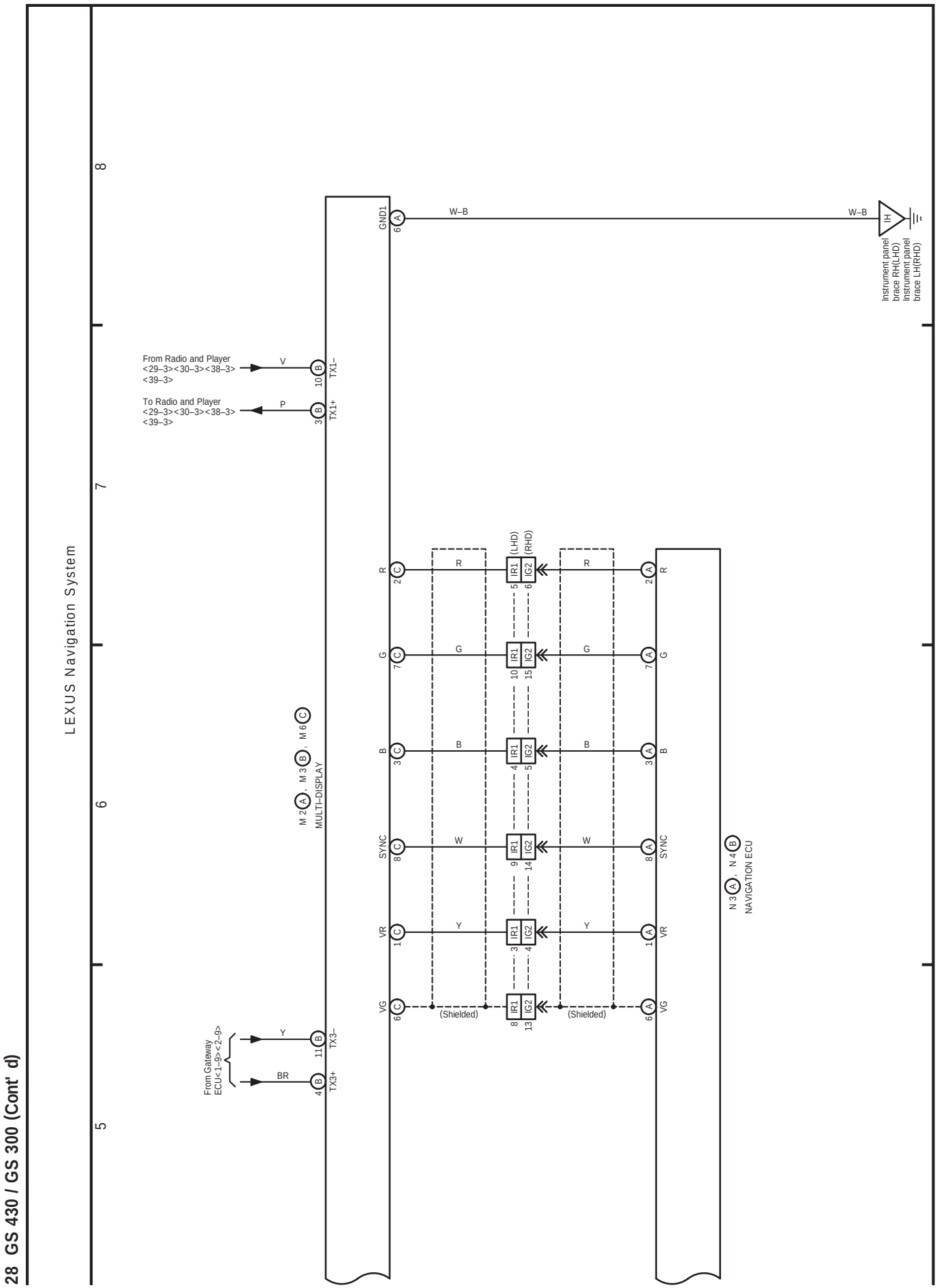
28 GS 430 / GS 300 (Cont' d)
LEXUS Navigation System
5
6
7
8
From Gateway ECU<1–9><2–9>
Y
BR
11 B
4 B
TX3–
TX3+
From Radio and Player <29–3><30–3><38–3><39–3>
V
10 B
TX1–
To Radio and Player <29–3><30–3><38–3><39–3>
P
3 B
TX1+
M 2 A , M 3 B , M 6 C
MULTI–DISPLAY
GND1
6 A
W–B
W–B
IH
Instrument panel brace RH(LHD)
Instrument panel brace LH(RHD)
R
2 C
G
7 C
B
3 C
SYNC
8 C
VR
1 C
VG
6 C
R
G
B
W
Y
(Shielded)
(Shielded)
IR1
IG2
(LHD)
(RHD)
5
6
10
15
4
5
9
14
3
4
8
13
2 A
7 A
3 A
8 A
1 A
6 A
N 3 A , N 4 B
NAVIGATION ECU