DI26L–02

ACC Power Source Circuit

CIRCUIT DESCRIPTION

This is the power source for A/C control assembly and servomotors, etc.

WIRING DIAGRAM

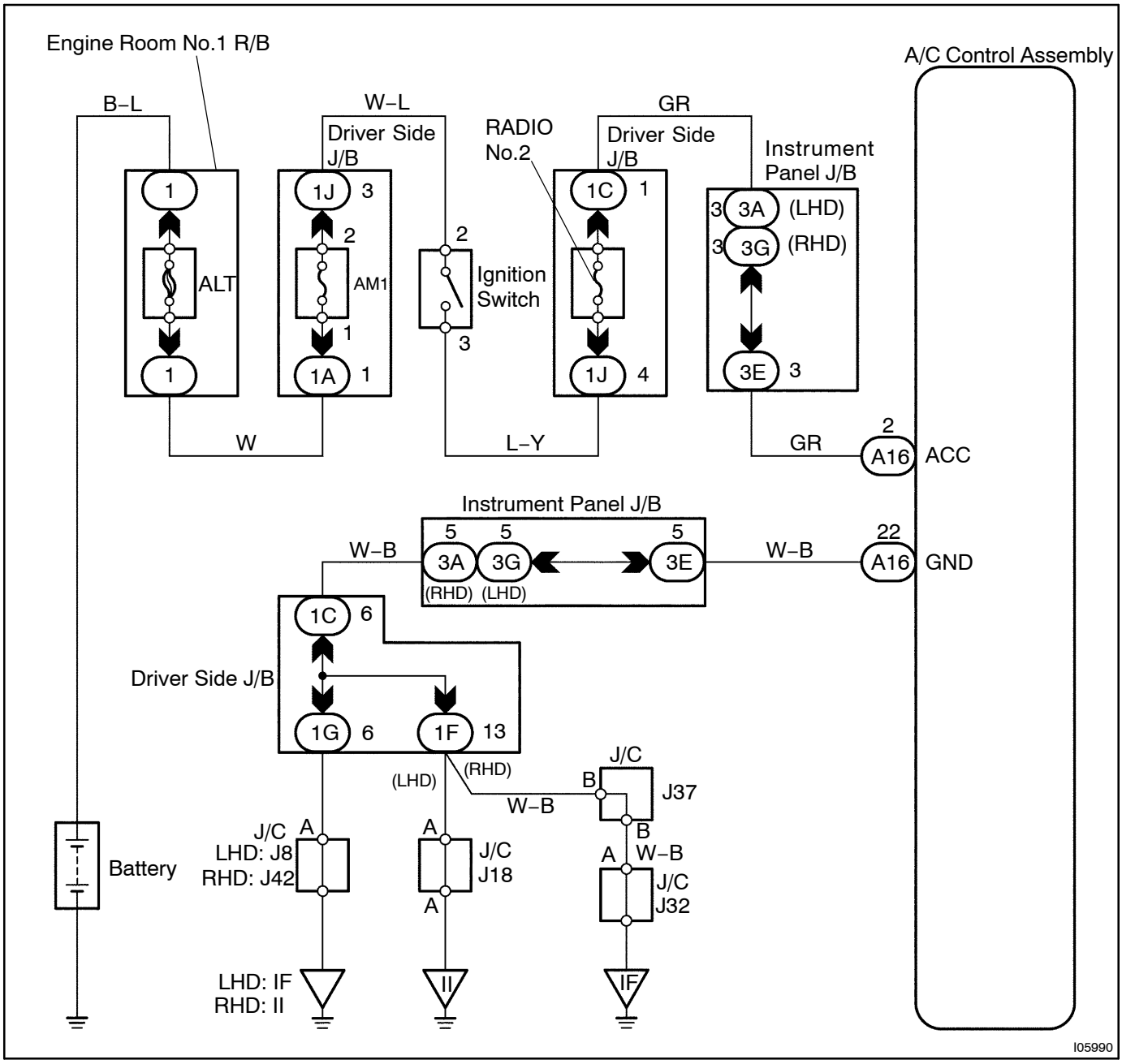

INSPECTION PROCEDURE

1	**Check voltage between terminals ACC and GND of A/C control assembly connector.**

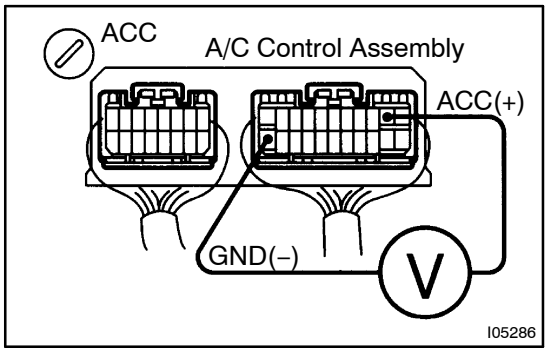

PREPARATION:
Remove A/C control assembly with connectors still connected.
CHECK:
(a) Turn ignition switch ON.
(b) Measure voltage between terminals ACC and GND of A/C control assembly.
OK:
Voltage : Battery positive voltage

OK → **Proceed to next circuit inspection shown on problem symptoms table (See page DI–912).**

NG

2	**Check continuity between terminal GND of A/C control assembly and body ground.**

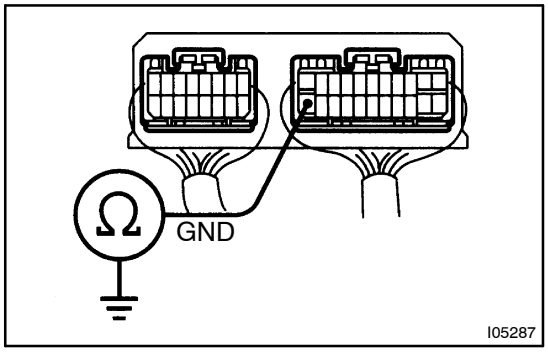

CHECK:
Measure resistance between terminal GND of A/C control assembly and body ground.
OK:
Resistance : 0 Ω (continuity)

NG → **Repair or replace harness or connector.**

OK

3	**Check RADIO No.2 fuse.**

Driver Side J/B

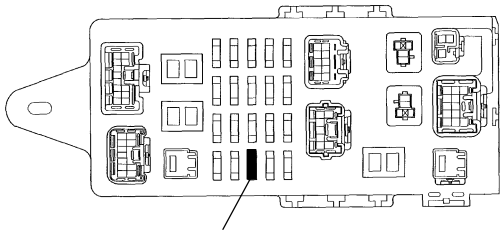

PREPARATION:

Remove RADIO No.2 fuse from driver side J/B.

CHECK:

Check continuity of RADIO No.2.

OK:

Continuity

NG → **Check for short in all the harness and components connected to the RADIO No.2 fuse (See attached wiring diagram).**

OK

Check and repair harness and connector between A/C control assembly and battery.