DI25R–03

DTC	P0770	Shift Solenoid ”E” Malfunction (SLU Shift Solenoid Valve)

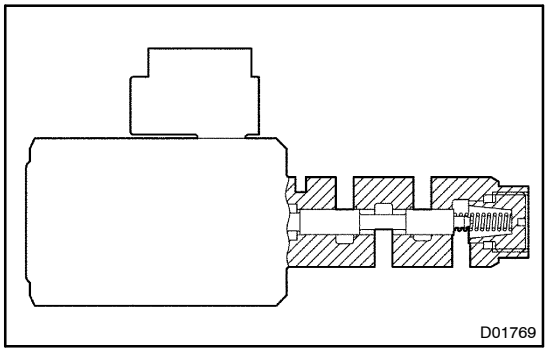

SYSTEM DESCRIPTION

The Engine & ECT ECU uses the signals from the Throttle Position Sensor and Air–flow Meter to monitor the engagement condition of the lock–up clutch.
Then the Engine & ECT ECU compares the engagement condition of the lock–up clutch with the lock–up schedule in the Engine & ECT ECU memory to detect mechanical trouble of the SLU solenoid valve SLU, valve body, torque converter and automatic transmission assembly (clutch, brake or gear etc.).

DTC No.	DTC Detecting Condition	Trouble Area
P0770	Lock–up does not occur when driving in the lock–up range (normal driving at 80 km/h [50 mph]), or lock–up remains ON in the lock–up OFF range. (2–trip detection logic)	• SLU solenoid valve is stuck open or closed • Valve body blocked up or stuck • Lock–up clutch • Automatic transmission assembly

INSPECTION PROCEDURE

HINT:
In case of using hand–held tester, start the inspection from step 1 and in case of not using the hand–held tester, start from step 2.

1	**Active test.**

PREPARATION:
(a) Remove the DLC3 cover.
(b) Connect a hand–held tester.
(c) Turn the ignition switch ON and hand–held tester main switch ON.

CHECK:
Using active test, check the lock–shift operation.

OK:
Lock–up ON

NG → **Replace the torque converter.**

OK

2	**Check SLU solenoid valve resistance.**

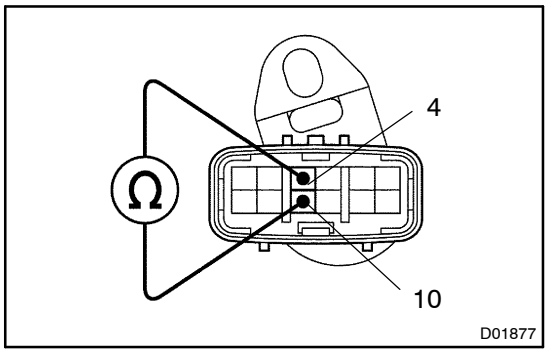

PREPARATION:
Disconnect the solenoid wire connector.
CHECK:
Measure the resistance between terminals 4 and 10 of solenoid connector.
OK:
Resistance: 5.0 – 5.6 Ω at 20 °C (68 °F)

NG → **Replace the SLU solenoid valve.**

OK

3	**Check SLU solenoid valve operation.**

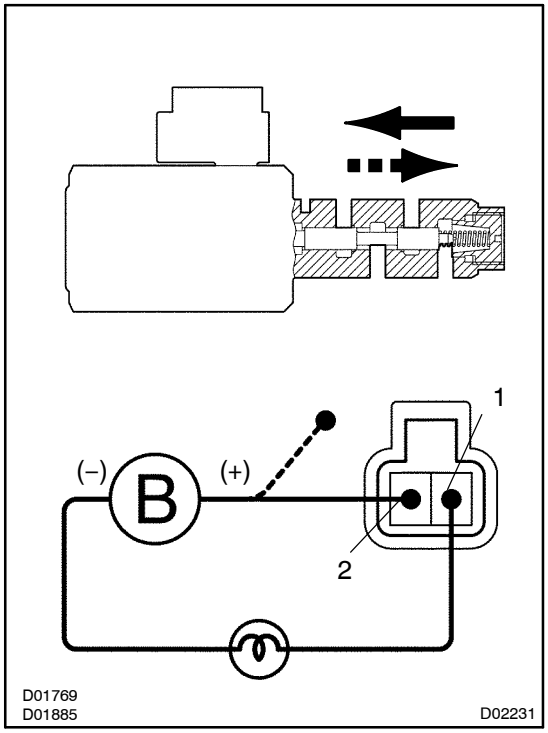

PREPARATION:
(a) Remove the oil pan.
(b) Remove the SLU solenoid valve.
CHECK:
Connect the positive (+) lead from the battery to terminal 2 and the negative (–) lead to terminal 1.
OK:

When B^+ is applied.	Valve moves in ➡ direction in illustration on the left.
When B^+ is cut off.	Valve moves in ⬅ direction in illustration on the left.

NG → **Replace the SLU solenoid valve.**

OK

4	**Check valve body (See page DI–294).**

NG → **Repair or replace the valve body.**

OK

Replace the torque converter (See page AT–26).