D16P7–08

DTC	B0105/53	Short in P Squib Circuit

CIRCUIT DESCRIPTION

The P squib circuit consists of the airbag sensor assembly and front passenger airbag assembly.
It causes the SRS to deploy when the SRS deployment conditions are satisfied.
For details of the function of each component, see OPERATION on page RS–2.
DTC B0105/53 is recorded when a short is detected in the P squib circuit.

DTC No.	DTC Detecting Condition	Trouble Area
B0105/53	• Short circuit in P squib wire harness • P squib malfunction • Airbag sensor assembly malfunction	• Front passenger airbag assembly (P squib) • Airbag sensor assembly • Wire harness

WIRING DIAGRAM

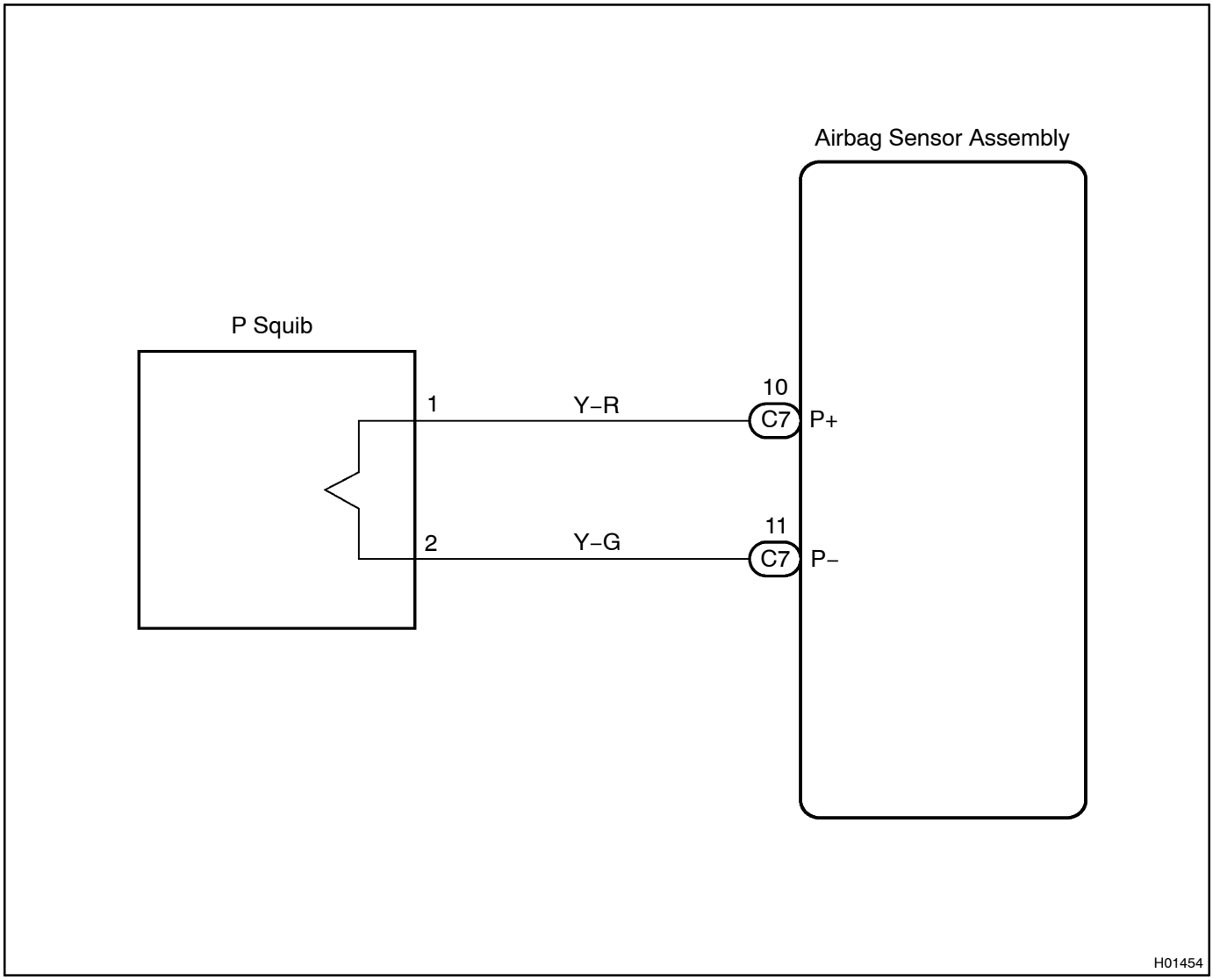

INSPECTION PROCEDURE

1	**Prepare for inspection (See step 1 on page DI–540).**

2	**Check P squib circuit.**

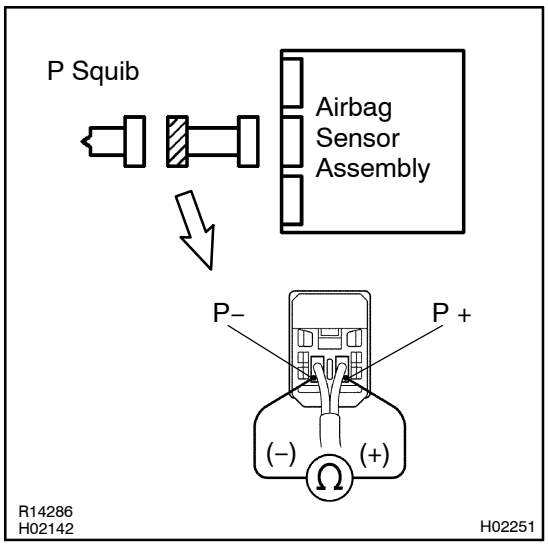

PREPARATION:

Release the airbag activation prevention mechanism of the connector (on the airbag sensor assembly side) between the front passenger airbag assembly and the airbag sensor assembly (See page DI–369).

CHECK:

For the connector (on the front passenger airbag assembly side) between the front passenger airbag assembly and the airbag sensor assembly, measure the resistance between P+ and P–.

OK:

Resistance: 1 MΩ or Higher

NG	**Repair or replace harness or connector between front passenger airbag assembly and airbag sensor assembly.**

OK

3	**Check airbag sensor assembly.**

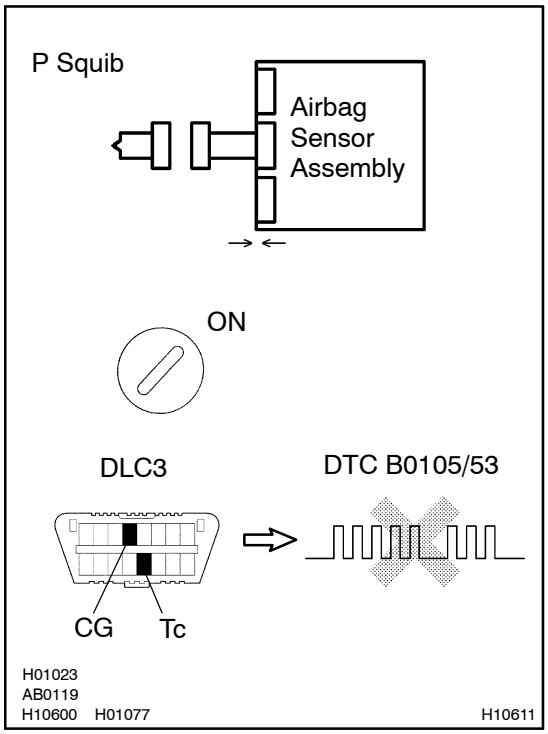

PREPARATION:

(a) Connect the connector to the airbag sensor assembly.

(b) Connect negative (–) terminal cable to the battery, and wait at least for 2 seconds.

CHECK:

(a) Turn the ignition switch to ON and wait at least for 20 seconds.

(b) Clear the DTC stored in memory (See page DI–369).

(c) Turn the ignition switch to LOCK, and wait at least for 20 seconds.

(d) Turn the ignition switch to ON, and wait at least for 20 seconds.

(e) Check the DTC (See page DI–369).

OK:

DTC B0105/53 is not output.

HINT:

Codes other than code B0105/53 may be output at this time, but they are not relevant to this check.

NG	**Replace airbag sensor assembly.**

OK

4	**Check P squib.**

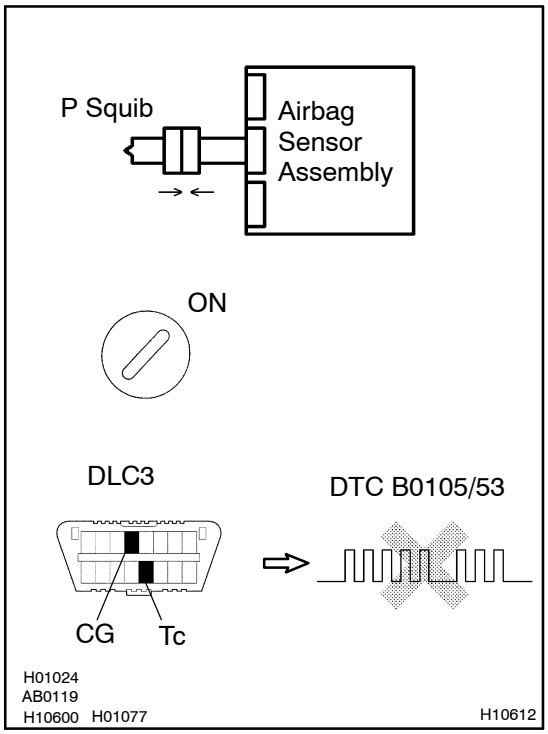

PREPARATION:

(a) Turn the ignition switch to LOCK.
(b) Disconnect negative (–) terminal cable from the battery, and wait at least for 90 seconds.
(c) Connect the front passenger airbag assembly connector.
(d) Connect negative (–) terminal cable to the battery, and wait at least for 2 seconds.

CHECK:

(a) Turn the ignition switch to LOOK, and wait at least for 20 seconds.
(b) Turn the ignition switch to ON, and wait at least for 20 seconds.
(c) Clear the DTC stored in memory (See page DI–369).
(d) Turn the ignition switch to LOCK, and wait at least for 20 seconds.
(e) Turn the ignition switch to ON, and wait at least for 20 seconds.
(f) Check the DTC (See page DI–369).

OK:

DTC B0105/53 is not output.

HINT:
Codes other than code B0105/53 may be output at this time, but they are not relevant to this check.

NG	**Replace front passenger airbag assembly.**

OK

From the results of the above inspection, the malfunctioning part can now be considered normal. To make sure of this, use the simulation method to check.