DI6PD–04

DTC	B0112/41	Short in Side Squib (RH) Circuit (to Ground)

CIRCUIT DESCRIPTION

The side squib (RH) circuit consists of the airbag sensor assembly and side airbag assembly (RH).
It causes the SRS to deploy when the SRS deployment conditions are satisfied.
For details of the function of each component, see OPERATION on page RS–2.
DTC B0112/41 is recorded when ground short is detected in the side squib (RH) circuit.

DTC No.	DTC Detecting Condition	Trouble Area
B0112/41	• Short circuit in side squib (RH) wire harness (to ground) • Side squib (RH) malfunction • Airbag sensor assembly malfunction	• Side airbag assembly (RH) • Airbag sensor assembly • Wire harness

WIRING DIAGRAM

See page DI–412.

INSPECTION PROCEDURE

1	**Prepare for inspection (See step 1 on page DI–540).**

2	**Check side squib (RH) circuit.**

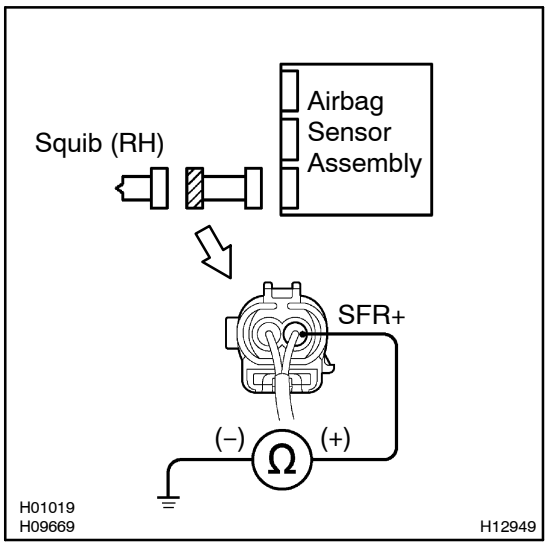

CHECK:
For the connector (on the side airbag assembly side) between the side airbag assembly (RH) and the airbag sensor assembly, measure the resistance between SFR+ and body ground.
OK:
Resistance: 1 MΩ or Higher

NG → **Repair or replace harness or connector between side airbag assembly (RH) and airbag sensor assembly.**

OK

3	**Check airbag sensor assembly.**

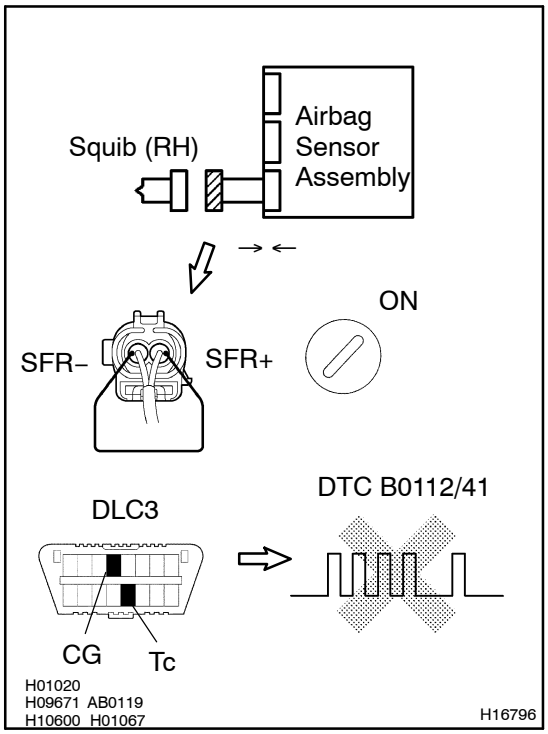

PREPARATION:

(a) Connect the connector to the airbag sensor assembly.

(b) Using a service wire, connect SFR+ and SFR– of the connector (on the side airbag assembly side) between the side airbag assembly (RH) and the airbag sensor assembly.

(c) Connect negative (–) terminal cable to the battery, and wait at least for 2 seconds.

CHECK:

(a) Turn the ignition switch to ON and wait at least for 20 seconds.

(b) Clear the DTC stored in memory (See step 5 on page DI–369).

(c) Turn the ignition switch to LOCK, and wait at least for 20 seconds.

(d) Turn the ignition switch to ON, and wait at least for 20 seconds.

(e) Check the DTC (See page DI–369).

OK:

DTC B0112/41 is not output.

HINT:

Codes other than code B0112/41 may be output at this time, but they are not relevant to this check.

NG	**Replace airbag sensor assembly.**

OK

4	**Check side squib (RH).**

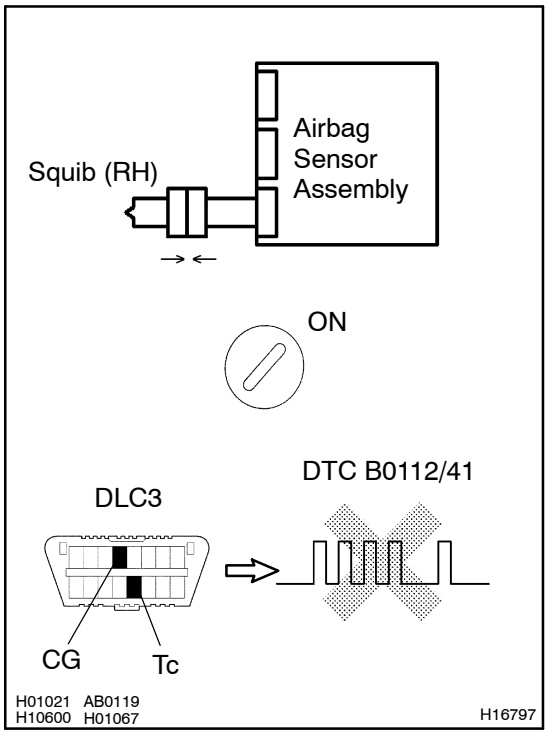

PREPARATION:

(a) Turn the ignition switch to LOCK.

(b) Disconnect negative (–) terminal cable from the battery, and wait at least for 90 seconds.

(c) Connect the side airbag assembly (RH) connector.

(d) Connect negative (–) terminal cable to the battery, and wait at least for 2 seconds.

CHECK:

(a) Turn the ignition switch to ON, and wait at least for 20 seconds.

(b) Clear the DTC stored in memory (See step 5 on page DI–369).

(c) Turn the ignition switch to LOCK, and wait at least for 20 seconds.

(d) Turn the ignition switch to ON, and wait at least for 20 seconds.

(e) Check the DTC (See page DI–369).

OK:

DTC B0112/41 is not output.

HINT:

Codes other than code B0112/41 may be output at this time, but they are not relevant to this check.

NG	**Replace side airbag assembly (RH).**

OK

From the results of the above inspection, the malfunctioning part can now be considered normal. To make sure of this, use the simulation method to check. If the malfunctioning part can not be detected by the simulation method, replace all SRS components including the wire harness.