DI6PN–08

DTC	B0135/73	Short in P/T Squib (LH) Circuit

CIRCUIT DESCRIPTION

The P/T squib (LH) circuit consists of the airbag sensor assembly and seat belt pretensioner (LH).
It causes the SRS to deploy when the SRS deployment conditions are satisfied.
For details of the function of each component, see OPERATION on page RS–2.
DTC B0135/73 is recorded when a short is detected in the P/T squib (LH) circuit.

DTC No.	DTC Detecting Condition	Trouble Area
B0135/73	• Short circuit between PL+ wire harness and PL– wire harness of squib • P/T squib (LH) malfunction • Airbag sensor assembly malfunction	• Seat belt pretensioner (LH) • Airbag sensor assembly • Wire harness

WIRING DIAGRAM

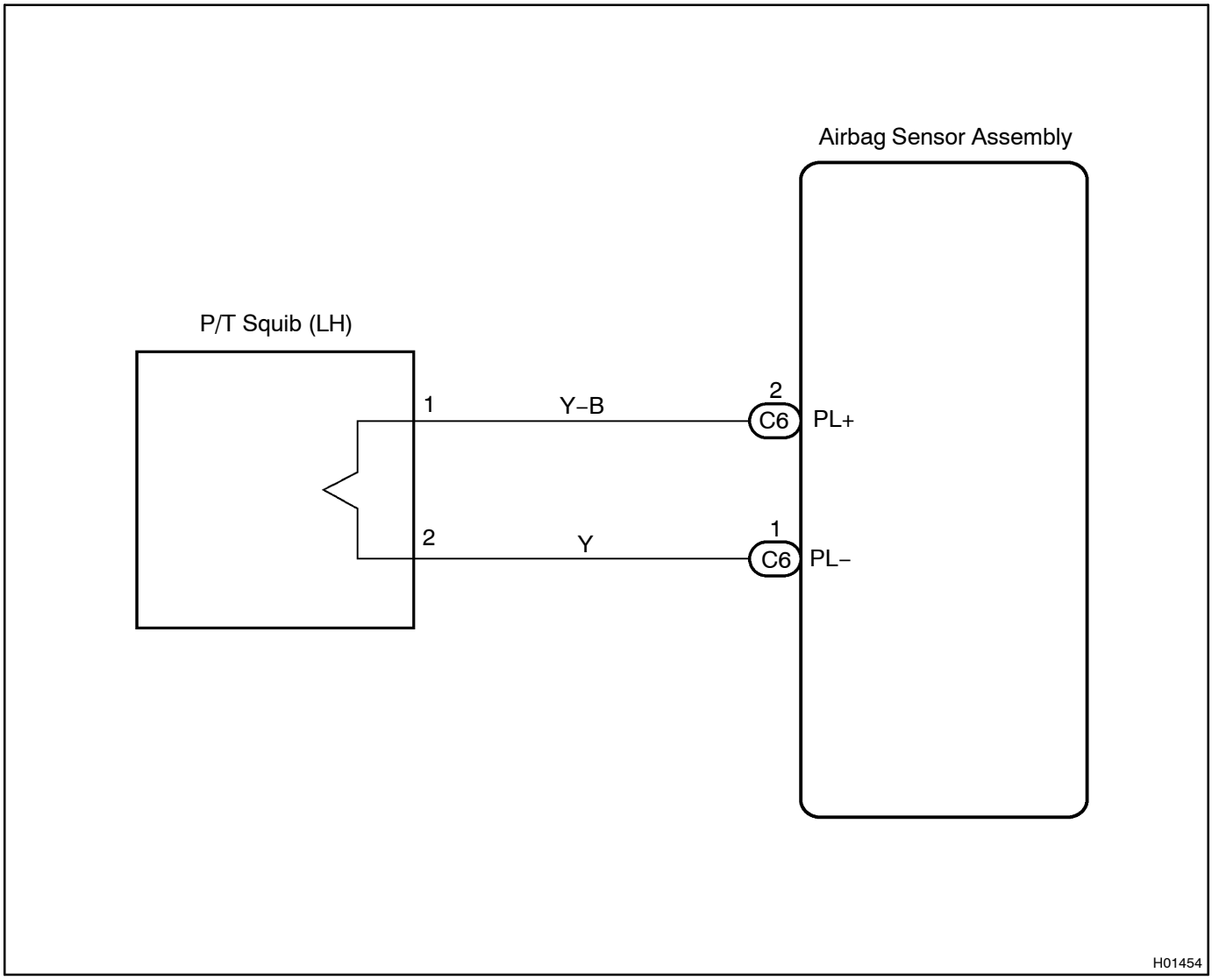

INSPECTION PROCEDURE

1	**Prepare for inspection (See step 1 on page DI–540).**

2	**Check P/T squib (LH) circuit.**

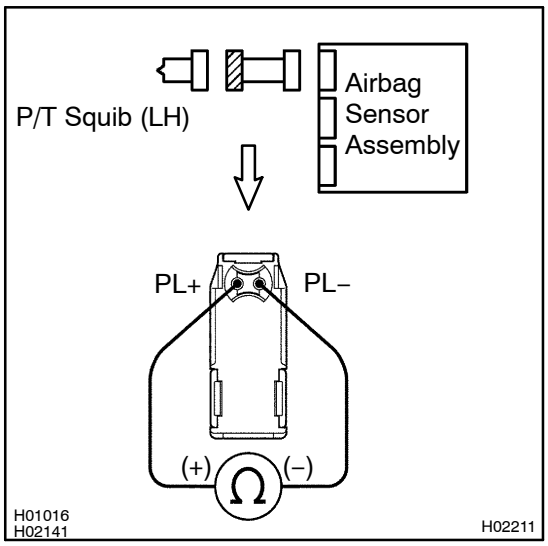

PREPARATION:

Release the airbag activation prevention mechanism of the connector (on the airbag sensor assembly side) between the airbag sensor assembly and the seat belt pretensioner (LH) (See page DI–369).

CHECK:

For the connector (on the seat belt pretensioner side) between the seat belt pretensioner (LH) and the airbag sensor assembly, measure the resistance between PL+ and PL–.

OK:

Resistance: 1 MΩ or Higher

NG → **Repair or replace harness or connector between seat belt pretensioner (LH) and airbag sensor assembly.**

OK

3	**Check airbag sensor assembly.**

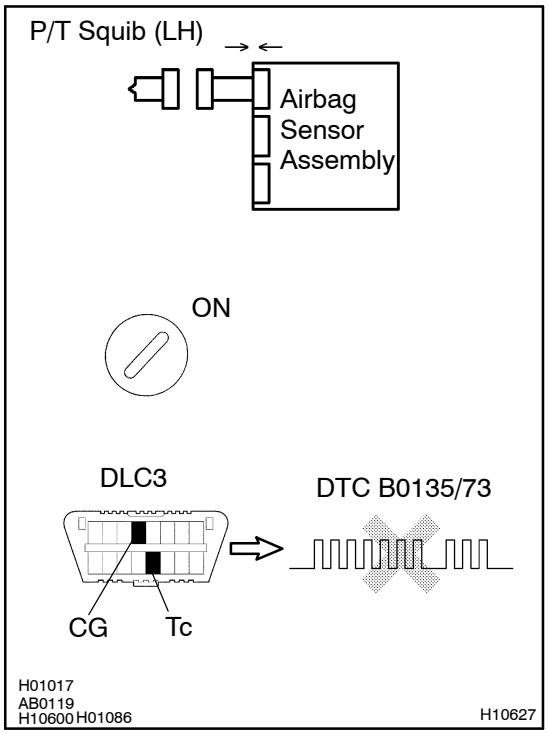

PREPARATION:

(a) Connect the connector to the airbag sensor assembly.

(b) Connect negative (–) terminal cable to the battery, and wait at least for 2 seconds.

CHECK:

(a) Turn the ignition switch to ON and wait at least for 20 seconds.

(b) Clear the DTC stored in memory (See page DI–369).

(c) Turn the ignition switch to LOCK, and wait at least for 20 seconds.

(d) Turn the ignition switch to ON, and wait at least for 20 seconds.

(e) Check the DTC (See page DI–369).

OK:

DTC B0135/73 is not output.

HINT:

Codes other than code B0135/73 may be output at this time, but they are not relevant to this check.

NG	**Replace airbag sensor assembly.**

OK

4	**Check P/T squib (LH).**

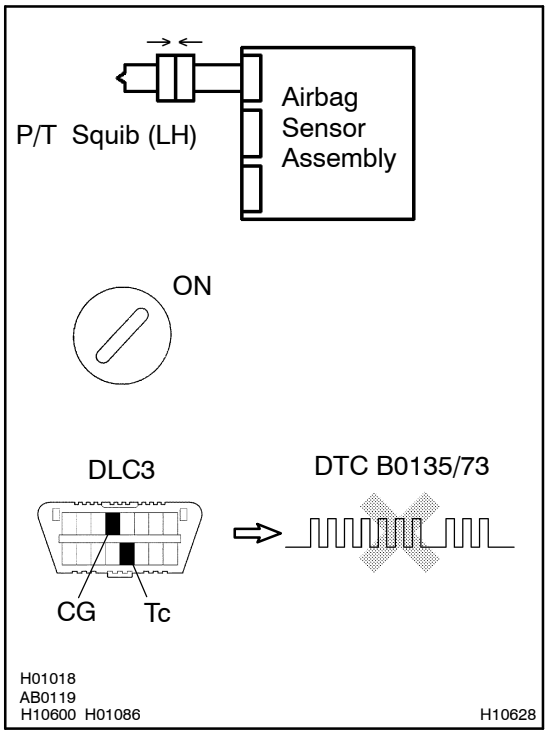

PREPARATION:

(a) Turn the ignition switch to LOCK.
(b) Disconnect negative (–) terminal cable from the battery, and wait at least for 90 seconds.
(c) Connect the seat belt pretensioner (LH) connector.
(d) Connect negative (–) terminal cable to the battery, and wait at least for 2 seconds.

CHECK:

(a) Turn the ignition switch to LOOK, and wait at least for 20 second.
(b) Turn the ignition switch to ON, and wait at least for 20 seconds.
(c) Clear the DTC stored in memory (See page DI–369).
(d) Turn the ignition switch to LOCK, and wait at least for 20 seconds.
(e) Turn the ignition switch to ON, and wait at least for 20 seconds.
(f) Check the DTC (See page DI–369).

OK:

DTC B0135/73 is not output.

HINT:
Codes other than code B0135/73 may be output at this time, but they are not relevant to this check.

NG	**Replace seat belt pretensioner (LH).**

OK

From the results of the above inspection, the malfunctioning part can now be considered normal. To make sure of this, use the simulation method to check.