DI6PD–02

DTC	B1162/81	Short in Curtain Shield Squib (RH) Circuit (to Ground)

CIRCUIT DESCRIPTION

The curtain shield squib (RH) circuit consists of the airbag sensor assembly and curtain shield airbag assembly (RH).
It causes the SRS to deploy when the SRS deployment conditions are satisfied.
For details of the function of each component, see OPERATION on page RS–2.
DTC B1162/81 is recorded when ground short is detected in the curtain shield squib (RH) circuit.

DTC No.	DTC Detecting Condition	Trouble Area
B1162/81	• Short circuit in curtain shield squib (RH) wire harness (to ground) • Curtain shield squib (RH) malfunction • Airbag sensor assembly malfunction	• Curtain shield airbag assembly (RH) • Airbag sensor assembly • Wire harness

WIRING DIAGRAM

See page DI–514.

INSPECTION PROCEDURE

1	**Prepare for inspection (See step 1 on page DI–540).**

2	**Check curtain shield squib (RH) circuit.**

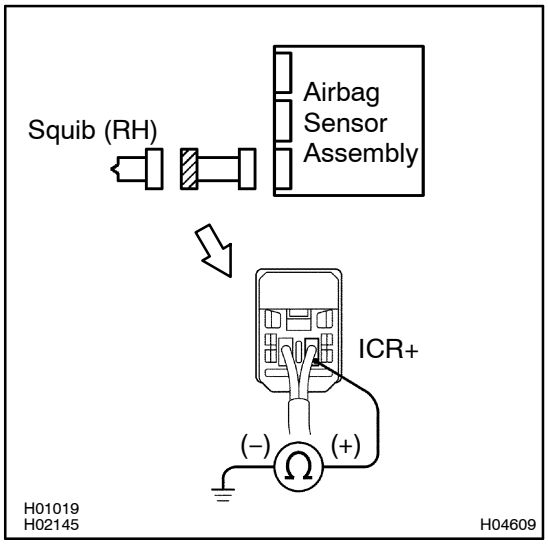

CHECK:
For the connector (on the curtain shield airbag assembly side) between the curtain shield airbag assembly (RH) and the airbag sensor assembly, measure the resistance between ICR+ and body ground.
OK:
Resistance: 1 MΩ or Higher

NG → **Repair or replace harness or connector between curtain shield airbag assembly (RH) and airbag sensor assembly.**

OK

3	**Check airbag sensor assembly.**

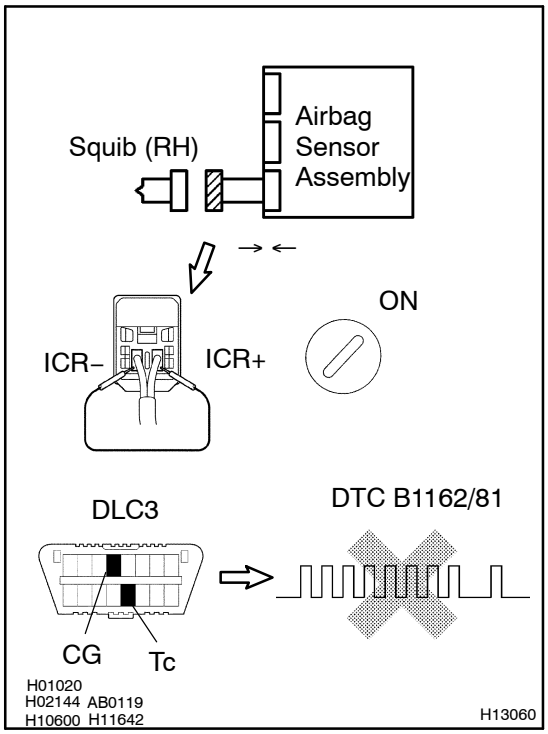

PREPARATION:

(a) Connect the connector to the airbag sensor assembly.

(b) Using a service wire, connect ICR+ and ICR– of the connector (on the curtain shield airbag assembly side) between the curtain shield airbag assembly (RH) and the airbag sensor assembly.

(c) Connect negative (–) terminal cable to the battery, and wait at least for 2 seconds.

CHECK:

(a) Turn the ignition switch to ON and wait at least for 20 seconds.

(b) Clear the DTC stored in memory (See step 5 on page DI–369).

(c) Turn the ignition switch to LOCK, and wait at least for 20 seconds.

(d) Turn the ignition switch to ON, and wait at least for 20 seconds.

(e) Check the DTC (See page DI–369).

OK:

DTC B1162/81 is not output.

HINT:

Codes other than code B1162/81 may be output at this time, but they are not relevant to this check.

NG	**Replace airbag sensor assembly.**

OK

4	**Check curtain shield squib (RH).**

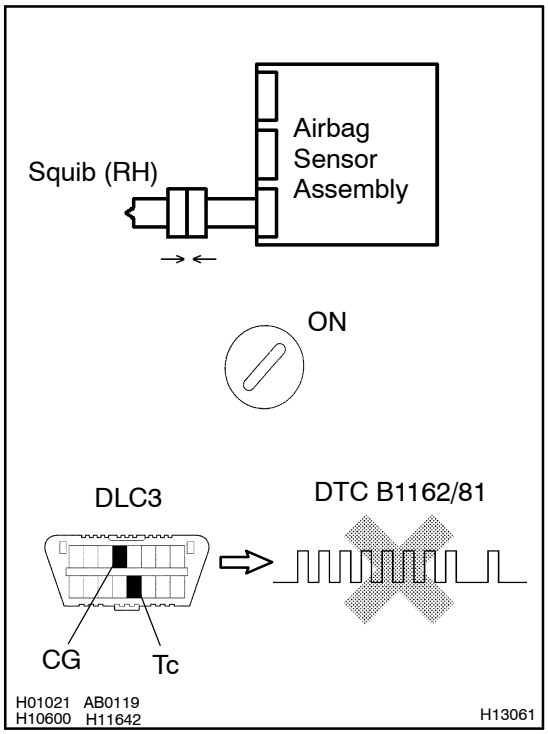

PREPARATION:

(a) Turn the ignition switch to LOCK.

(b) Disconnect negative (–) terminal cable from the battery, and wait at least for 90 seconds.

(c) Connect the curtain shield airbag assembly (RH) connector.

(d) Connect negative (–) terminal cable to the battery, and wait at least for 2 seconds.

CHECK:

(a) Turn the ignition switch to ON, and wait at least for 20 seconds.

(b) Clear the DTC stored in memory (See step 5 on page DI–369).

(c) Turn the ignition switch to LOCK, and wait at least for 20 seconds.

(d) Turn the ignition switch to ON, and wait at least for 20 seconds.

(e) Check the DTC (See page DI–369).

OK:

DTC B1162/81 is not output.

HINT:

Codes other than code B1162/81 may be output at this time, but they are not relevant to this check.

NG	**Replace curtain shield airbag assembly (RH).**

OK

From the results of the above inspection, the malfunctioning part can now be considered normal. To make sure of this, use the simulation method to check. If the malfunctioning part can not be detected by the simulation method, replace all SRS components including the wire harness.