EM0E3–02

REPLACEMENT

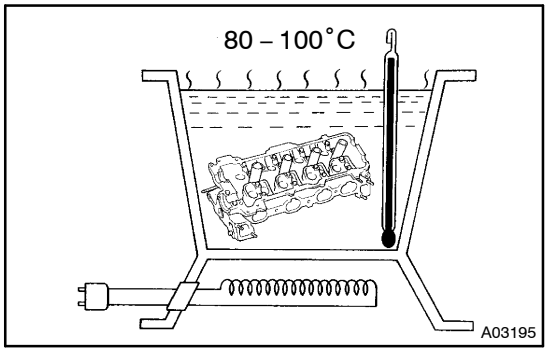

1. REPLACE VALVE GUIDE BUSHINGS

(a) Gradually heat the cylinder head to 80 – 100°C (176 – 212°F).

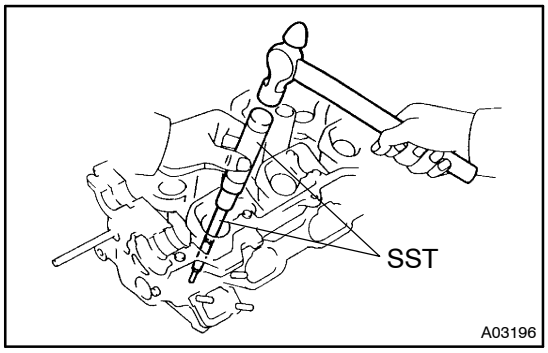

(b) Using SST and a hammer, tap out the guide bushing.
SST 09201–01055, 09950–70010 (09951–07100)

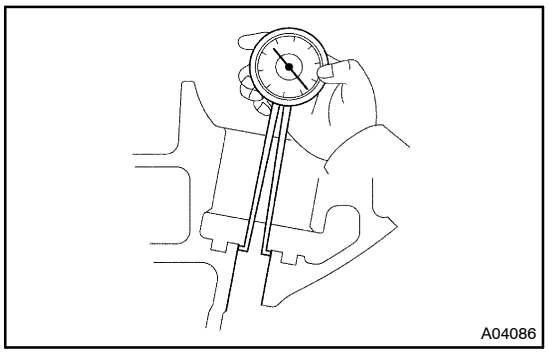

(c) Using a caliper gauge, measure the bushing bore diameter of the cylinder head.

Both intake and exhaust

Bushing bore diameter mm (in.)	Bushing size
10.285 – 10.306 (0.4049 – 0.4057)	Use STD
10.335 – 10.356 (0.4069 – 0.4077)	Use O/S STD

(d) Select a new guide bushing (STD or O/S 0.05).
If the bushing bore diameter of the cylinder head is greater than 10.306 mm (0.4057 in.), machine the bushing bore to this dimension:

10.335 – 10.356 mm (0.4069 – 0.4077 in.)

If the bushing bore diameter of the cylinder head is greater than 10.356 mm (0.4077 in.), replace the cylinder head.

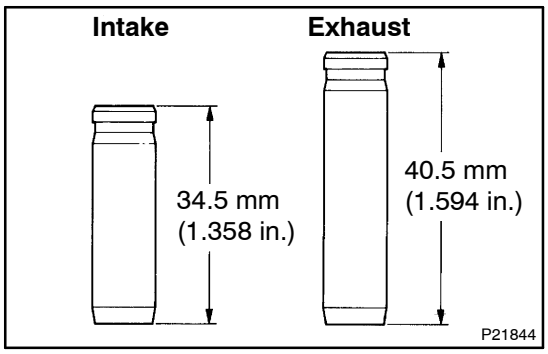

HINT:
Different the bushings are used for the intake and exhaust.

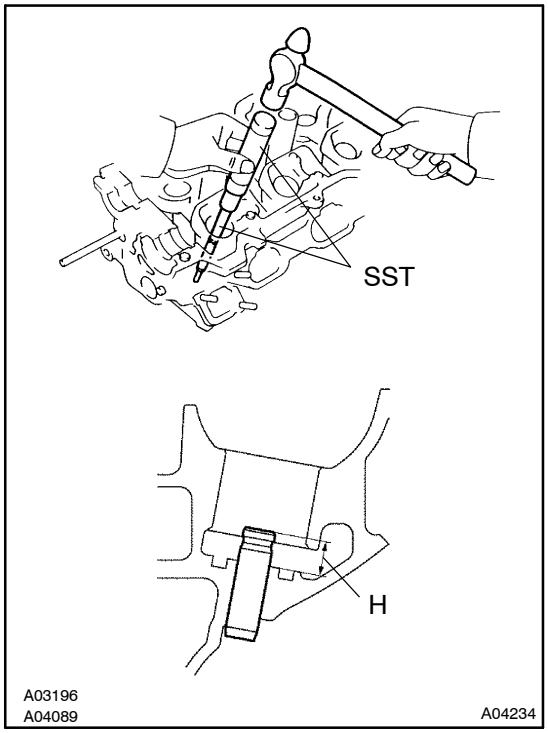

(e) Gradually heat the cylinder head to 80 – 100°C (176 – 212°F).

(f) Using SST and a hammer, tap in a new guide bushing to the specified protrusion height.
SST 09201–01055, 09950–70010 (09951–07100)
Protrusion height (H):

Intake	9.2 – 9.8 mm (0.362 – 0.386 in.)
Exhaust	8.2 – 8.8 mm (0.323 – 0.346 in.)

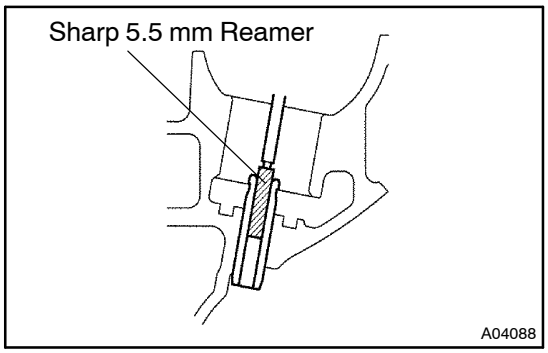

(g) Using a sharp 5.5 mm reamer, ream the guide bushing to obtain the standard specified clearance (See page EM–46) between the guide bushing and valve stem.

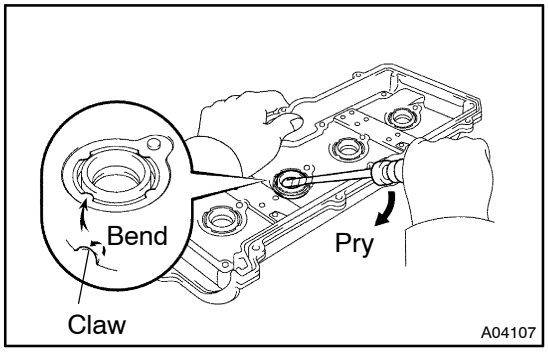

2. REPLACE SPARK PLUG TUBE GASKETS

(a) Bend the 4 ventilation case claws installed on the cylinder head cover to an angle of 90° or more.

(b) Using a screwdriver, pry out the gasket.

NOTICE:

Be careful not to damage the cylinder head cover. Tape the screwdriver tip.

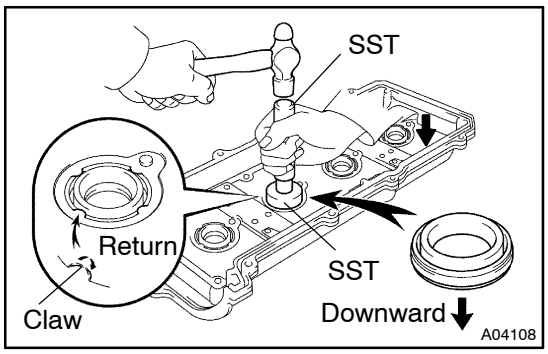

(c) Using SST and a hammer, tap in a new gasket until its surface is flush with the upper edge of the cylinder head cover.
SST 09950–60010 (09551–00240, 09951–00440, 09952–06010), 09950–70010 (09951–07100)

NOTICE:

Be careful of the installation direction.

(d) Apply a light coat of MP grease to the gasket lip.

(e) Return the 4 ventilation case claws to its original position.