FOR ALL OF VEHICLES

IN05V–01

PRECAUTION

1. FOR VEHICLES EQUIPPED WITH SRS AIRBAG AND SEAT BELT PRETENSIONER

(a) The LEXUS GS300 is equipped with an SRS (Supplemental Restraint System), such as the driver airbag, front passenger airbag, side airbags and seat belt pretensioners.

Failure to carry out service operations in the correct sequence could cause the supplemental restraint system to unexpectedly deploy during servicing, possibly leading to a serious accident.

Further, if a mistake is made in servicing the supplemental restraint system, it is possible the SRS may fail to operate when required. Before servicing (including removal or installation of parts, inspection or replacement), be sure to read the following items carefully, then follow the correct procedure described in this manual.

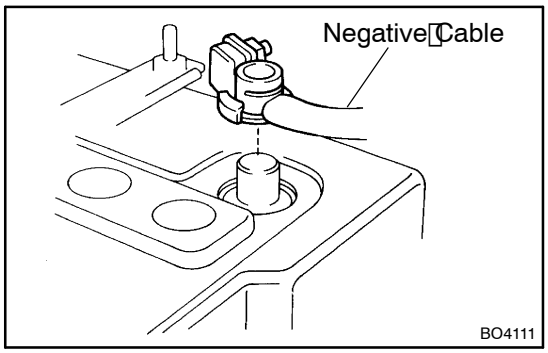

(b) GENERAL NOTICE

(1) Malfunction symptoms of the supplemental restraint system are difficult to confirm, so the diagnostic trouble codes become the most important source of information when troubleshooting. When troubleshooting the supplemental restraint system, always inspect the diagnostic trouble codes before disconnecting the battery (See page DI–386).

(2) Work must be started after 90 seconds from the time the ignition switch is turned to the "LOCK" position and the negative (–) terminal cable is disconnected from the battery.

(The supplemental restraint system is equipped with a back–up power source so that if work is started within 90 seconds of disconnecting the negative (–) terminal cable from the battery, the SRS may deploy.)

When the negative (–) terminal cable is disconnected from the battery, memory of the clock and audio systems will be cancelled. So before starting work, make a record of the contents memorized by the each memory system. Then when work is finished, reset the clock and audio systems as before.

This vehicle has power tilt and power telescopic steering, power seat, power outside rear view mirror and power shoulder belt anchorage, which are all equipped with memory function, it is not possible to make a record of the memory contents. So when the work is finished, therefore it will be necessary to explain this fact to the customer, and ask the cus-

tomer to adjust the features and reset the memory. To avoid erasing the memory of each memory system, never use a back–up power supply from outside the vehicle.

(3) Even in cases of a minor collision where the SRS does not deploy, the steering wheel pad, front passenger airbag assembly, side airbag assemblies and seat belt pretensioners should be inspected (See page RS–15, RS–29, RS–42 and BO–125).

(4) Never use SRS parts from another vehicle. When replacing parts, replace them with new parts.

(5) Before repairs, remove the airbag sensor if shocks are likely to be applied to the sensor during repairs.

(6) Never disassemble and repair the airbag sensor assembly, side airbag sensor assembly, steering wheel pad, front passenger airbag, side airbag or seat belt pretensioner in order to reuse them.

(7) If the airbag sensor assembly, side airbag sensor assembly, steering wheel pad, front passenger airbag, side airbag or seat belt pretensioner have been dropped, or if there are cracks, dents or other defects in the case, bracket or connector, replace them with new ones.

(8) Do not directly expose the airbag sensor assembly, side airbag sensor assembly, steering wheel pad, front passenger airbag, side airbag or seat belt pretensioner to hot air or flames.

(9) Use a volt/ohmmeter with high impedance (10 kΩ/V minimum) for troubleshooting of the electrical circuit.

(10) Information labels are attached to the periphery of the SRS components. Follow the instructions on the notices.

(11) After work on the supplemental restraint system is completed, check the SRS warning light (See page DI–386).

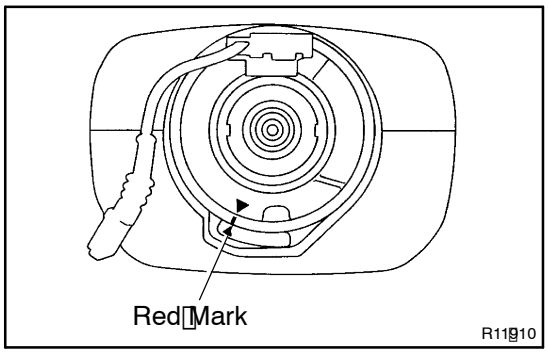

(c) SPIRAL CABLE (in Combination Switch)

The steering wheel must be fitted correctly to the steering column with the spiral cable at the neutral position, otherwise cable disconnection and other troubles may result. Refer to SR–170 of this manual concerning correct steering wheel installation.

(d) STEERING WHEEL PAD (with Airbag)

(1) When removing the steering wheel pad or handling a new steering wheel pad, it should be placed with the pad top surface facing up.
In addition do not store a steering wheel pad on top of another one. Storing the pad with its metallic surface facing upward may lead to a serious accident if the airbag inflates for some reason.

(2) Never measure the resistance of the airbag squib. (This may cause the airbag to deploy, which is very dangerous.)

(3) Grease should not be applied to the steering wheel pad and the pad should not be cleaned with detergents of any kind.

(4) Store the steering wheel pad where the ambient temperature remains below 93°C (200°F), without high humidity and away from electrical noise.

(5) When using electric welding, first disconnect the airbag connector (yellow color and 2 pins) under the steering column near the combination switch connector before starting work.

(6) When disposing of a vehicle or the steering wheel pad alone, the airbag should be deployed using an SST before disposal (See page RS-17).
Carry out the operation in a safe place away from electrical noise.

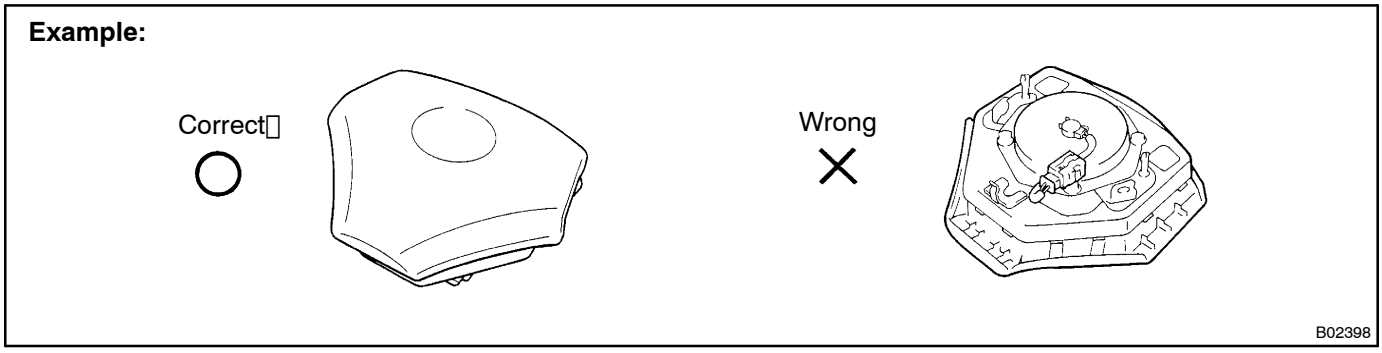

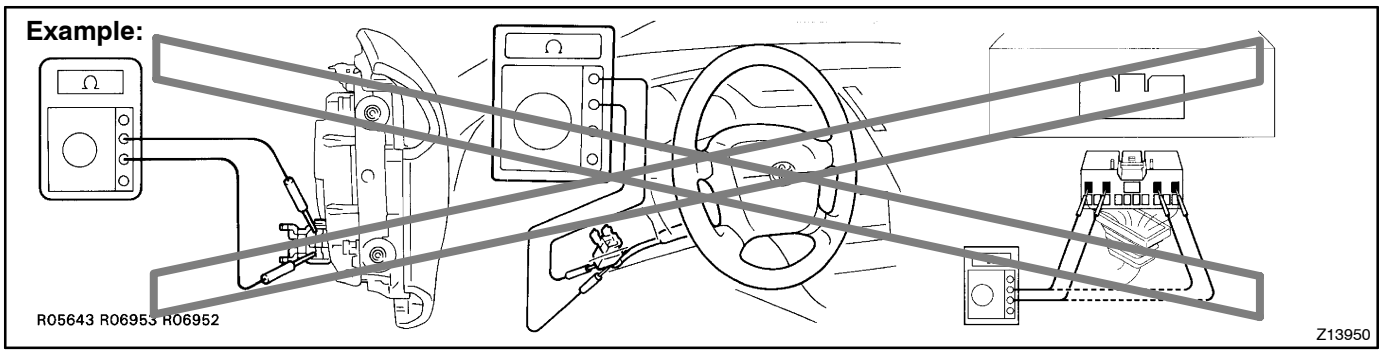

(e) FRONT PASSENGER AIRBAG ASSEMBLY

(1) Always store a removed or new front passenger airbag assembly with the airbag deployment direction facing up.
Storing the airbag assembly with the airbag deployment direction facing down could cause a serious accident if the airbag inflates.

(2) Never measure the resistance of the airbag squib. (This may cause the airbag to deploy, which is very dangerous.)

(3) Grease should not be applied to the front passenger airbag assembly and the airbag door should not be cleaned with detergents of any kind.

(4) Store the airbag assembly where the ambient temperature remains below 93°C (200°F), without high humidity and away from electrical noise.

(5) When using electric welding, first disconnect the airbag connector (yellow color and 2 pins) installed on the assembly before starting work.

(6) When disposing of a vehicle or the airbag assembly alone, the airbag should be deployed using an SST before disposal (See page RS–31).
Perform the operation in a safe place away from electrical noise.

Example:

Correct

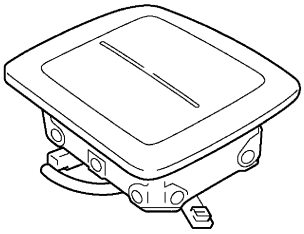

Wrong

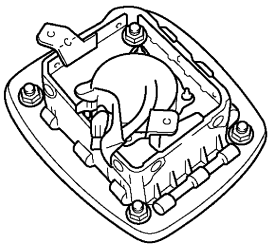

B00696

Example:

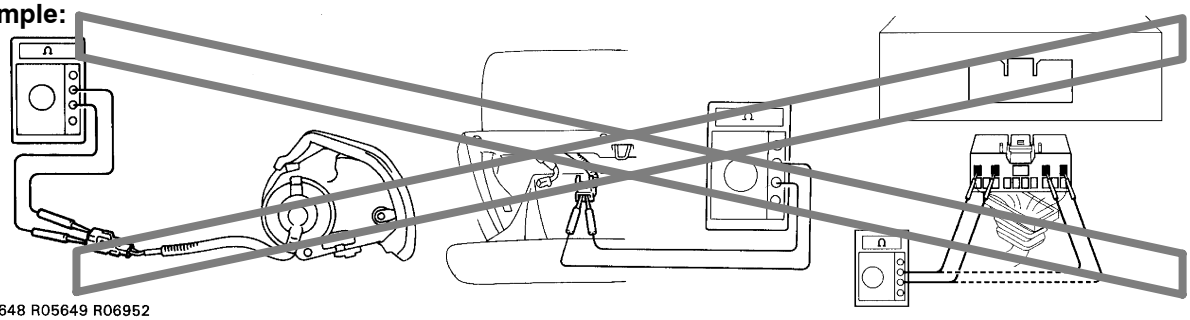

R05648 R05649 R06952

Z13951

(f) SIDE AIRBAG ASSEMBLY

(1) Always store a removed or new side airbag assembly with the airbag deployment direction facing up. Storing the airbag assembly with the airbag deployment direction facing down could cause a serious accident if the airbag inflates.

(2) Never measure the resistance of the airbag squib. (This may cause the airbag to deploy, which is very dangerous.)

(3) Grease should not be applied to the side airbag assembly and the surface should not be cleaned with detergents of any kind.

(4) Store the airbag assembly where the ambient temperature remains below 93°C (200°F), without high humidity and away from electrical noise.

(5) When using electric welding, first disconnect the airbag connector (yellow color and 2 pins) under the seat before starting work.

(6) When disposing of a vehicle or the side airbag assembly alone, the airbag should be deployed using an SST before disposal (See page RS–43).
Perform the operation in a safe place away from electrical noise.

Example:

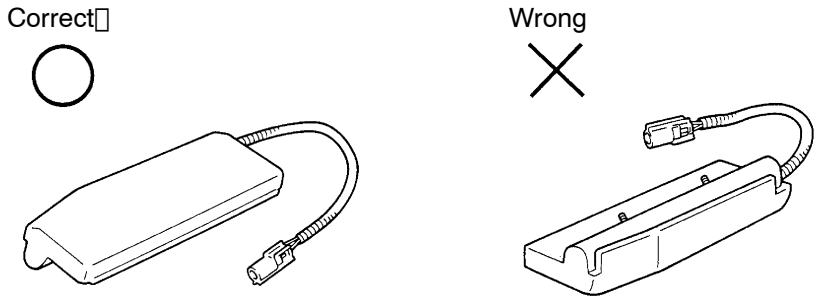

B02129

Example:

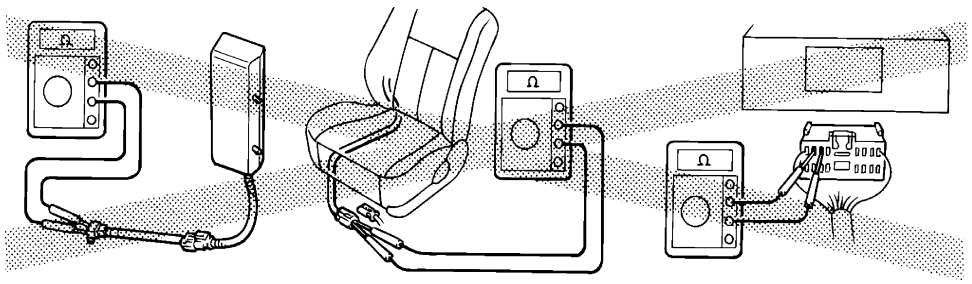

B01546

(g) SEAT BELT PRETENSIONER

(1) Never measure the resistance of the seat belt pretensioner. (This may cause the pretensioner operates, which is very dangerous.)

(2) Oil or water should not be put on the front seat outer belt and the front seat outer belt should not be cleaned with detergents of any kind.

(3) Store the front seat outer belt where the ambient temperature remains below 80°C (176°F), without high humidity and away from electrical noise.

(4) When using electric welding, first disconnect the connector (yellow color and 2 pins) installed at the center pillar lower garnish before work.

(5) When disposing of a vehicle or a front seat outer belt alone, the seat belt pretensioner should be activated before disposal (See page BO–126). Perform the operation in a safe place away from electrical noise.

(h) AIRBAG SENSOR ASSEMBLY

(1) Never reuse the airbag sensor assembly involved in a collision when the SRS has deployed.

(2) The connectors to the airbag sensor assembly should be connected or disconnected with the sensor mounted on the floor. If the connectors are connected or disconnected while the airbag sensor assembly is not mounted to the floor, it could cause undesired ignition of the supplemental restraint system.

(3) Work must be started after 90 seconds from the time the ignition switch is turned to the "LOCK" position and the negative (–) terminal cable is disconnected from the battery, even if only loosing the set bolts of the airbag sensor assembly.

(i) WIRE HARNESS AND CONNECTOR

The SRS wire harness is integrated with the cowl wire harness assembly and floor wire harness assembly. The wires for the SRS wire harness are encased in a yellow corrugated tube. All the connectors for the system are also a standard yellow color. If the SRS wire harness becomes disconnected or the connector becomes broken due to an accident, etc., repair or replace it as shown on page RS–69.

2. FOR VEHICLES EQUIPPED WITH A CATALYTIC CONVERTER

CAUTION:

If large amount of unburned gasoline flows into the converter, it may overheat and create a fire hazard. To prevent this, observe the following precautions and explain them to your customer.

(a) Use only unleaded gasoline.

(b) Avoid prolonged idling.
Avoid running the engine at idle speed for more than 20 minutes.

(c) Avoid spark jump test.
  (1) Perform spark jump test only when absolutely necessary. Perform this test as rapidly as possible.
  (2) While testing, never race the engine.

(d) Avoid prolonged engine compression measurement.
Engine compression tests must be done as rapidly as possible.

(e) Do not run engine when fuel tank is nearly empty.
This may cause the engine to misfire and create an extra load on the converter.

(f) Avoid coasting with ignition turned off and prolonged braking.

(g) Do not dispose of used catalyst along with parts contaminated with gasoline or oil.

3. IF VEHICLE IS EQUIPPED WITH MOBILE COMMUNICATION SYSTEM

For vehicles with mobile communication systems such as two–way radios and cellular telephones, observe the following precautions.

(a) Install the antenna as far as possible away from the ECU and sensors of the vehicle's electronic system.

(b) Install the antenna feeder at least 20 cm (7.87 in.) away from the ECU and sensors of the vehicle's electronic systems. For details about ECU and sensors locations, refer to the section on the applicable component.

(c) Do not wind the antenna feeder together with the other wiring as much as possible, also avoid running the antenna feeder parallel with other wire harnesses.

(d) Check that the antenna and feeder are correctly adjusted.

(e) Do not install powerful mobile communications system.

4. FOR USING HAND–HELD TESTER

CAUTION:

Observe the following items for safety reasons:

- **Before using the hand–held tester, the hand–held tester's operator manual should be read thoroughly.**
- **Be sure to route all cables securely when driving with the hand–held tester connected to the vehicle. (i.e. Keep cables away from feet, pedals, steering wheel and shift lever.)**
- **Two persons are required when test driving with the hand–held tester, one person to drive the vehicle and the other person to operate the hand–held tester.**

5. FOR VEHICLES EQUIPPED WITH VEHICLE STABILITY CONTROL (VSC) SYSTEM

Notice for using 2–wheel drum tester.

When using 2–wheel drum tester such as a speedometer tester or chassis dynamometer, etc., or jacking up the rear wheels and driving the wheels, always push in the VSC OFF switch to turn the TRC & VSC system OFF.

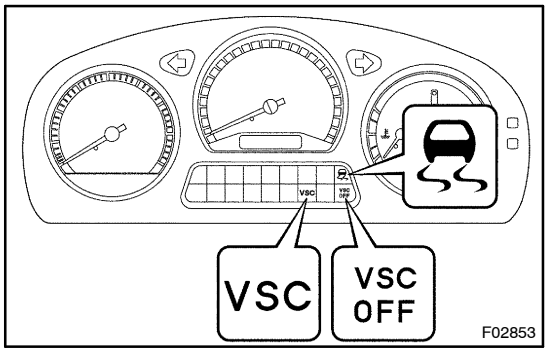

(1) Press the VSC OFF switch.

(2) Check that the VSC OFF indicator light comes ON.

HINT:

The VSC OFF indicator light should be always OFF when the engine is restarted.

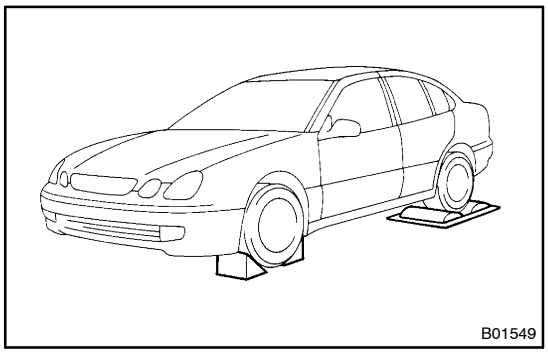

(3) Begin measurements.

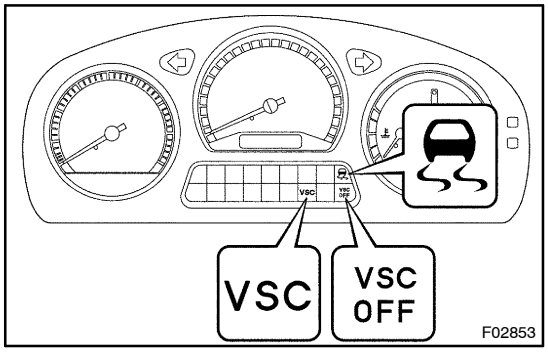

(4) Press the VSC OFF switch again to change the TRC & VSC system to operational condition and check that the VSC OFF indicator light goes off.

HINT:

The SLIP indicator light blinks when the TRC system is operational.

6. INSPECTION AND ADJUSTMENT OF JOINT ANGLE DURING REMOVAL AND INSTALLATION OF PROPELLER SHAFT
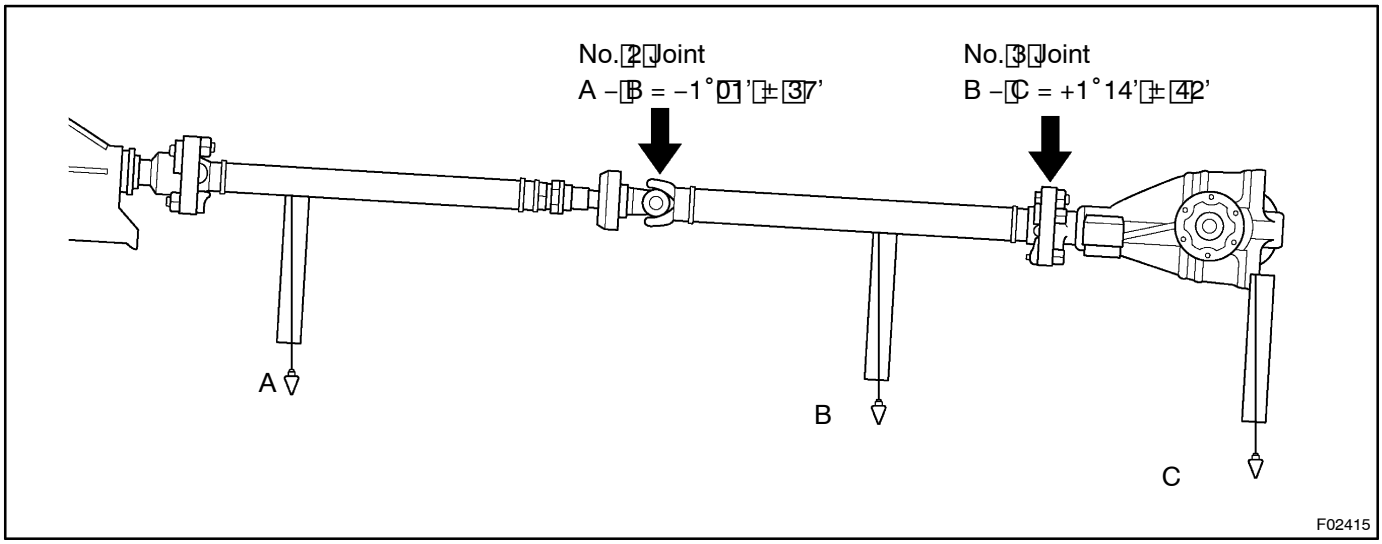
When performing operations which involve the removal and installation of the propeller shaft, always check the joint angle. Make adjustments if necessary (See page PR–12).