AT05T–02

REASSEMBLY

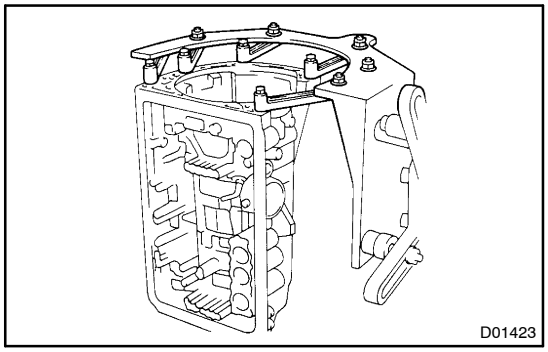

1. INSTALL TRANSMISSION CASE ON OVERHAUL ATTACHMENT

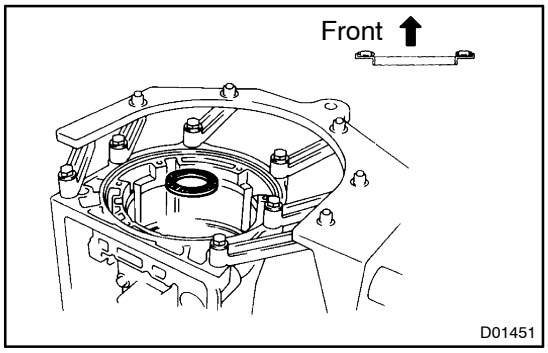

2. INSTALL REAR PLANETARY RING GEAR

(a) Install the assembled bearing & race.

Assembled bearing & race diameter: mm (in.)

	Inside	Outside
Assembled bearing & race	52.9 (2.083)	70.6 (2.780)

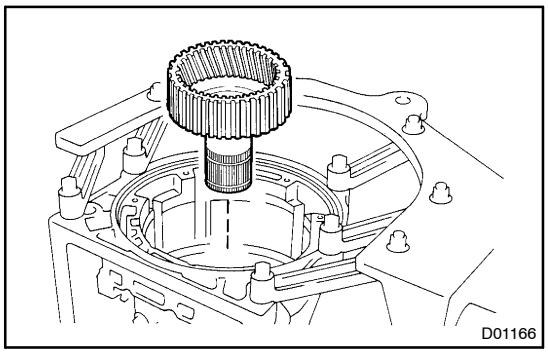

(b) Install the rear planetary ring gear.

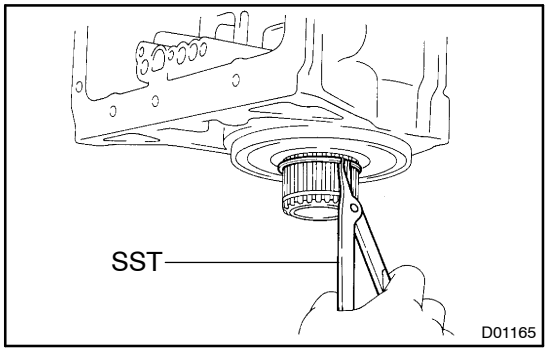

(c) Using SST, install the snap ring.
SST 09350–03002 (09350–07070)

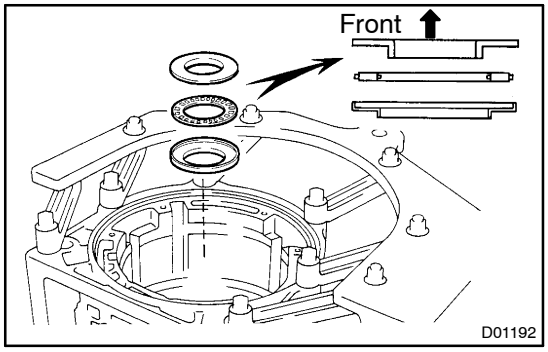

3. INSTALL OUTPUT SHAFT WITH CENTER AND REAR PLANETARY GEAR

(a) Install the 2 races and bearing onto the rear planetary ring gear.

Bearing and race diameter: mm (in.)

	Inside	Outside
Race	39.2 (1.543)	56.8 (2.236)
Bearing	40.7 (1.602)	57.0 (2.244)
Race	41.2 (1.620)	59.8 (2.354)

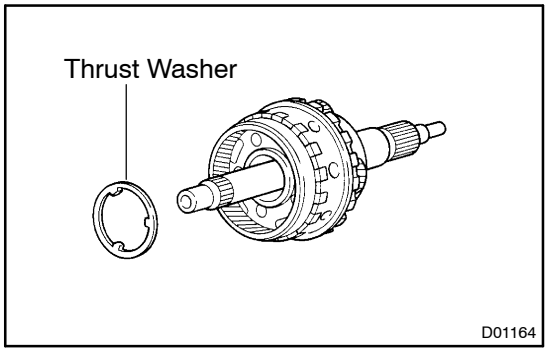

(b) Install the thrust washer to the output shaft with center & rear planetary gear.

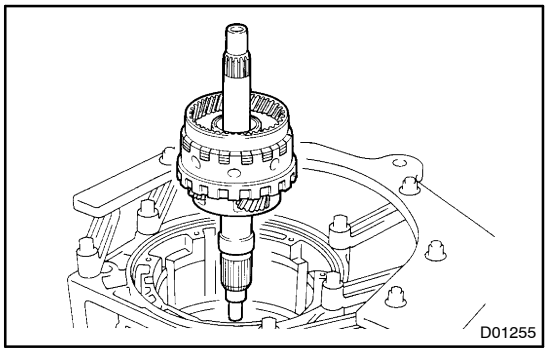

(c) Install the output shaft with center & rear planetary gear.

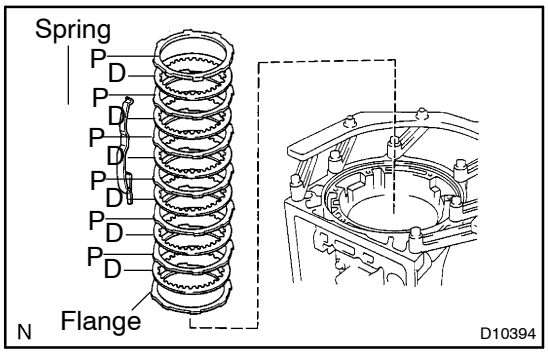

4. INSTALL FRONT PLANETARY GEAR

(a) Install the spring to the case.

(b) Install the 2nd brake pack (6 plates, 6 discs and flange).
Install in order: P = Plate, D = Disc
Flange – D – P – D – P – D – P – D – P – D – P – D – Flange
Flange thickness: mm (in.)

No.	Thickness	No.	Thickness
21	2.1 (0.083)	27	2.7 (0.106)
23	2.3 (0.091)	29	2.9 (0.114)
25	2.5 (0.098)	31	3.1 (0.122)

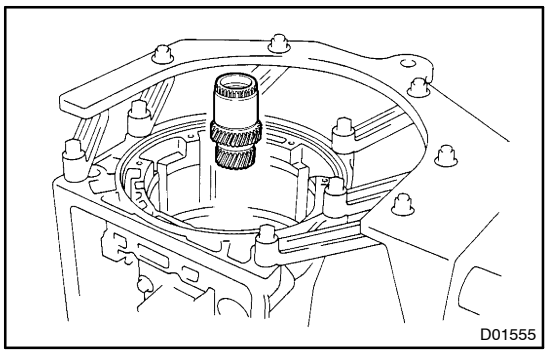

(c) Install the front & center planetary sun gear from the case.

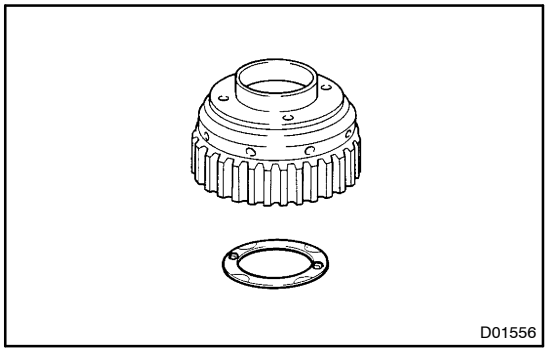

(d) Coat the thrust washer, with petroleum jelly and install it onto front planetary gear.

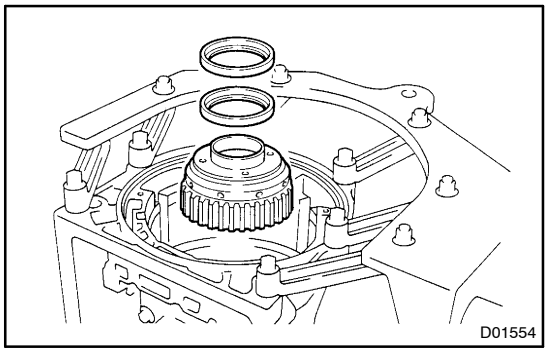

(e) Install the front planetary gear and 2 washers from the case.

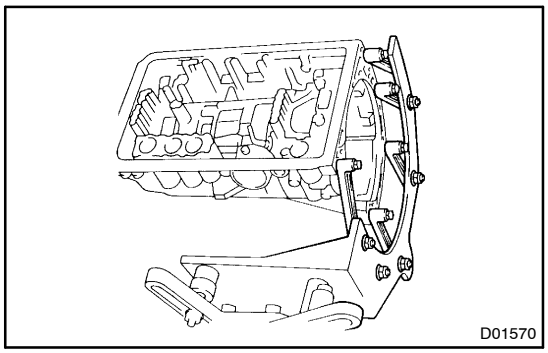

5. INSTALL MULTIPLE DISC BRAKE AND NO.1 ONE–WAY CLUTCH

(a) Lay the transmission case.

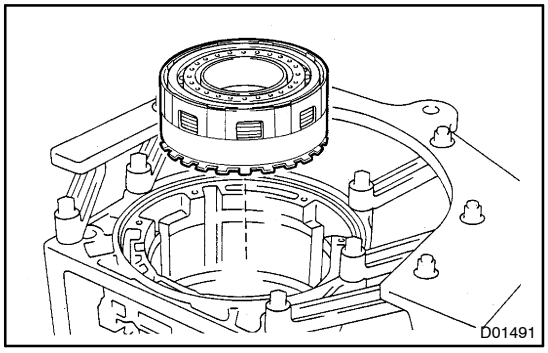

(b) Install the multiple disc brake to the case.

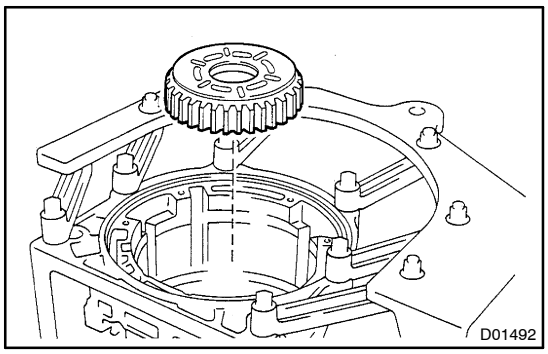

(c) Install the No.1 one–way clutch to the multiple disc brake.

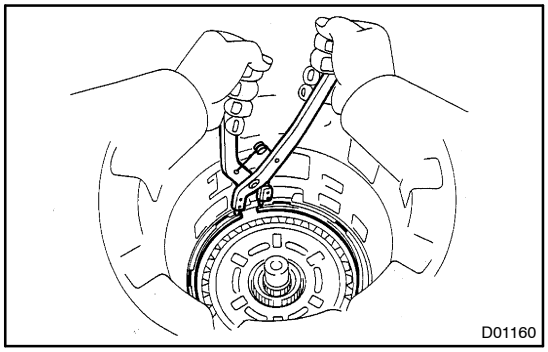

(d) Using SST, install the snap ring.
SST 09350–30020 (09350–07060)

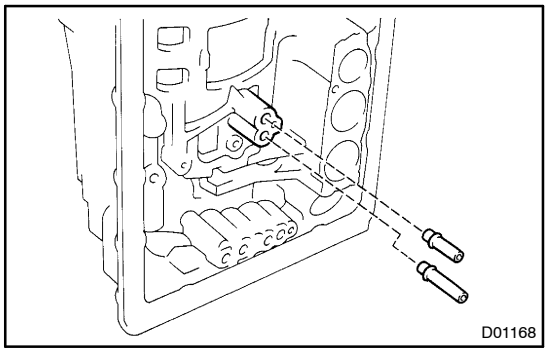

6. INSTALL BRAKE DRUM GASKET

(a) Coat 2 new gaskets with ATF.

(b) Install the 2 brake drum gaskets.

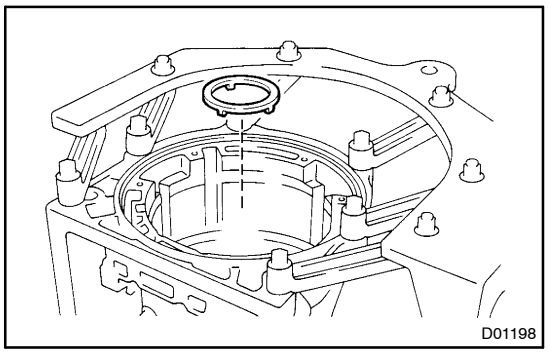

7. INSTALL SUN GEAR INPUT DRUM

(a) Install the thrust washer.

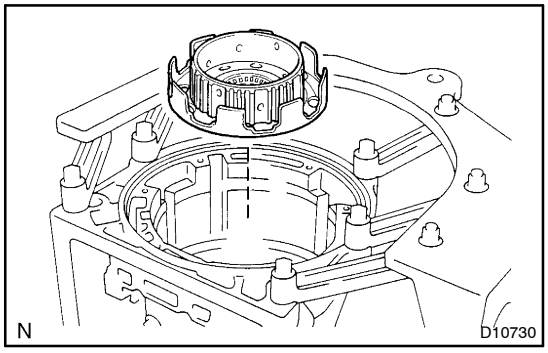

(b) Install the sun gear input drum.

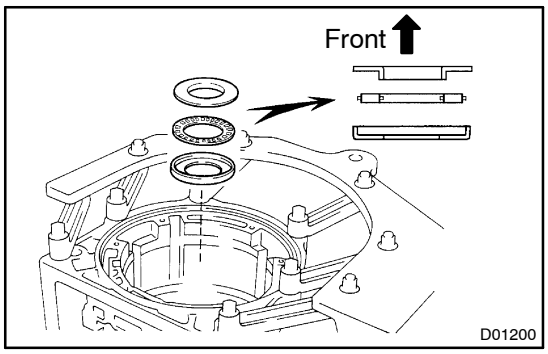

(c) Coat the bearing, 2 races with petroleum jelly and install them onto the sun gear input drum.

Bearing and race diameter: mm (in.)

	Inside	Outside
Race	32.5 (1.280)	59.0 (2.323)
Bearing	43.5 (1.712)	59.8 (2.354)
Race	43.5 (1.712)	61.5 (2.421)

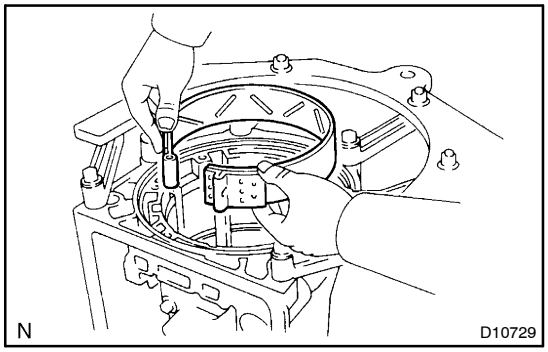

8. INSTALL 3RD COAST BRAKE BAND

(a) Install the 3rd coast brake band to the transmission case.

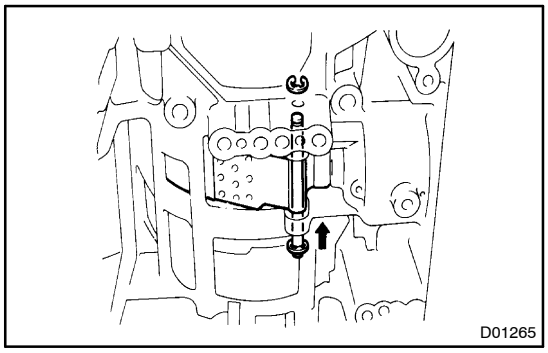

(b) Install the E–ring to the pin.

(c) Install the pin through the brake band.

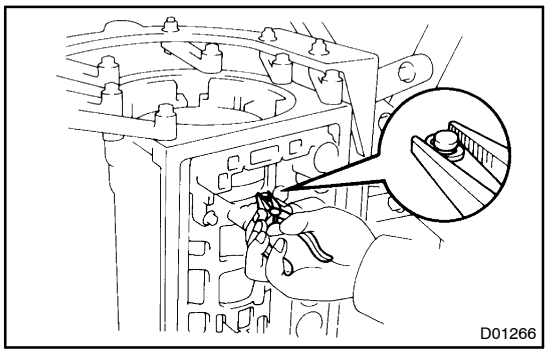

(d) Using a needle nose plier, install the E–ring to the pin.

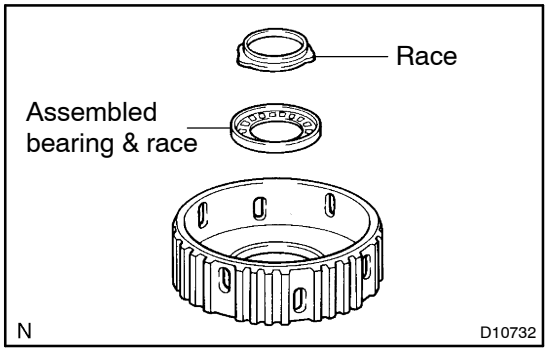

9. INSTALL DIRECT CLUTCH WITH FORWARD CLUTCH

(a) Coat the assembled bearing & race, race with petroleum jelly and install them onto the forward clutch hub.
Assembled bearing & race and diameter: mm (in.)

	Inside	Outside
Assembled bearing & race	26.3 (1.035)	44.0 (1.732)
Race	26.2 (1.031)	41.1 (1.618)

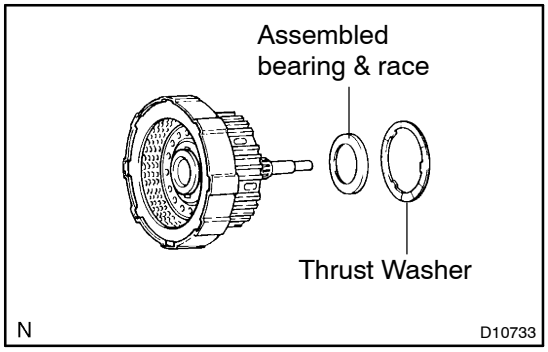

(b) Install the assembled bearing & race and thrust washer to the forward clutch.
Assembled bearing & race diameter: mm (in.)

	Inside	Outside
Assembled bearing & race	33.5 (1.319)	47.8 (1.882)

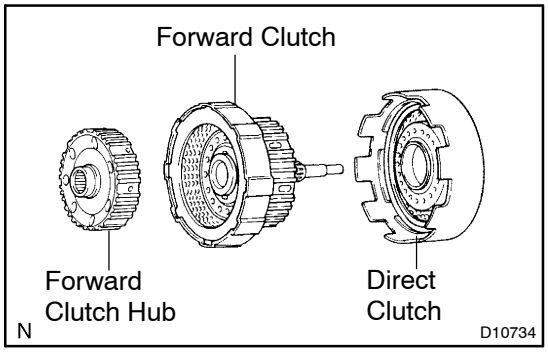

(c) Install the direct clutch and forward clutch hub to the forward clutch.

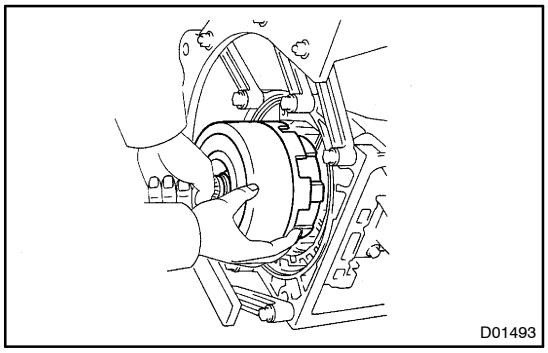

(d) Insert the direct clutch with forward clutch to the case.

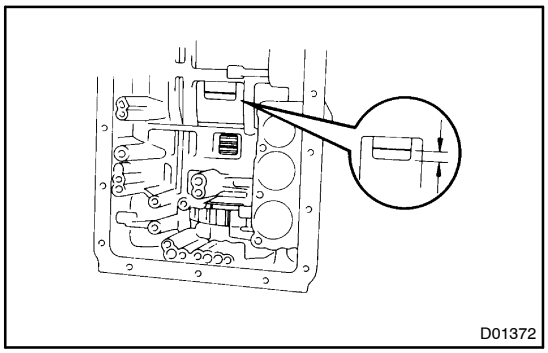

(e) With the case set upright, using vernier calipers, measure the distance between the sun gear input drum and direct clutch drum.
Height: 4.1 – 6.0 mm (0.161 – 0.236 in.)

If the height is non–standard, check for improper installation.

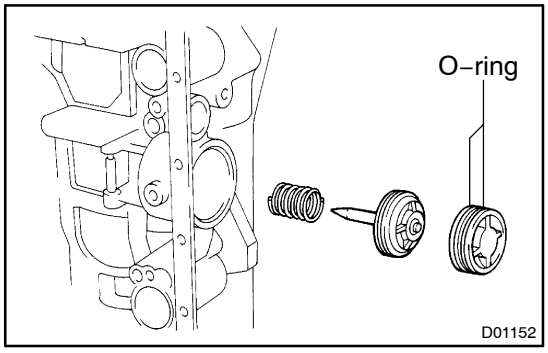

10. INSTALL 3RD COAST BRAKE COVER, PISTON ASSEMBLY AND SPRING

(a) Coat 2 new O–rings with ATF and install them to the cover.

(b) Install the spring, piston assembly and cover to the case.

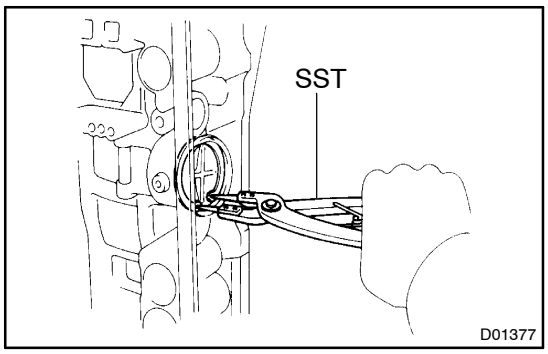

(c) Using SST, install the snap ring.
SST 09350–30020 (09350–07060)

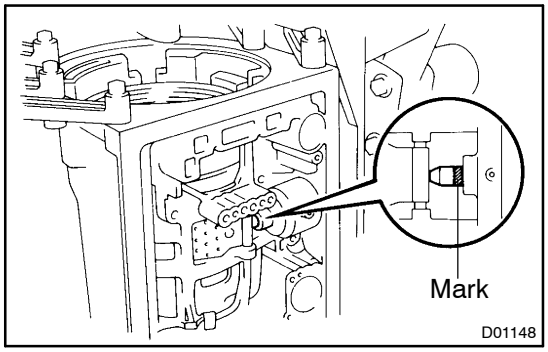

11. CHECK PISTON ROD STROKE OF 3RD COAST BRAKE

(a) Place a mark on the 2nd coast brake piston rod.

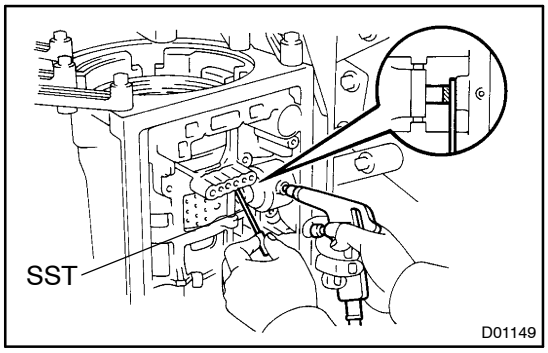

(b) Using SST, measure the stroke while applying and releasing compressed air (392 kPa, 4 kgf/cm^2, 57 psi).
SST 09240–00020
Piston rod stroke: 2.0 – 3.0 mm (0.079 – 0.118 in.)

If the stroke is more than the specified, replace the piston rod with a longer one.

Piston rod length: mm (in.)

77.65 (3.057)	79.90 (3.146)
78.40 (3.086)	
79.15 (3.116)	

If it is still more than standard value, replace the brake band with a new one.

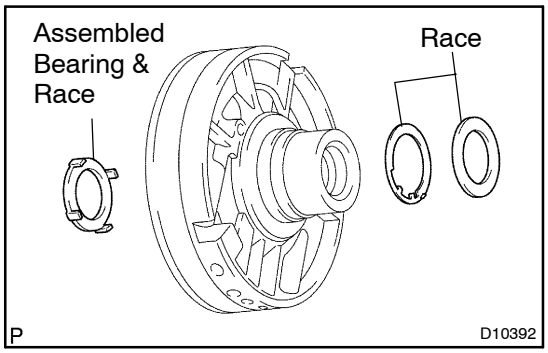

12. INSTALL O/D SUPPORT ASSEMBLY

(a) Coat the assembled bearing & race and race with petroleum jelly and install them onto the O/D support assembly.
Assembled bearing & race and race diameter: mm (in.)

	Inside	Outside
Assembled bearing & race	33.6 (1.323)	50.3 (1.980)
Race	37.0 (1.457)	51.0 (2.008)

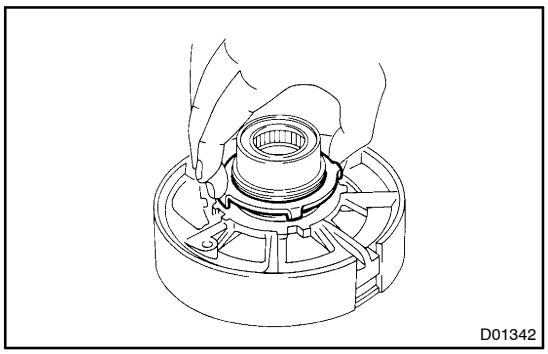

(b) Coat the thrust washer with petroleum jelly and install it onto the O/D support assembly.

HINT:
Make sure that the lug shapes match the holes on the O/D support.

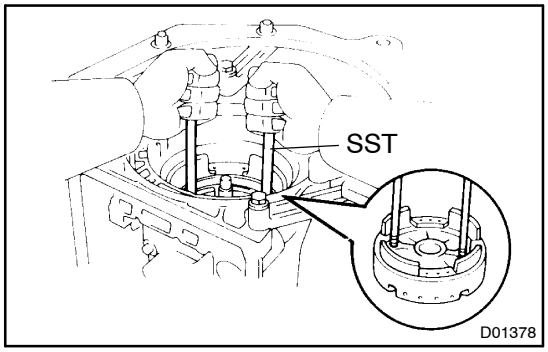

(c) Using 2 bolts of SST, face the bolt and oil holes of the O/D support toward the valve body side, align them with the bolt holes of the transmission case and install the bolts.
SST 09350–30020 (09350–07020)

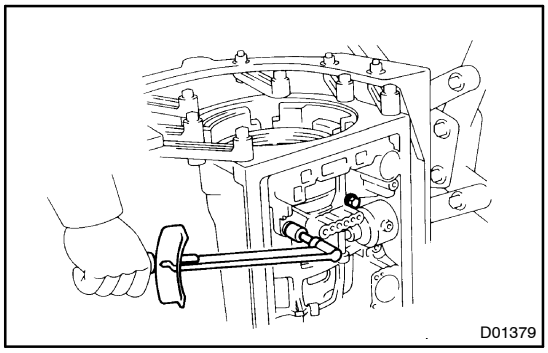

(d) Install the 2 bolts.
Torque: 25 N·m (260 kgf·cm, 19 ft·lbf)

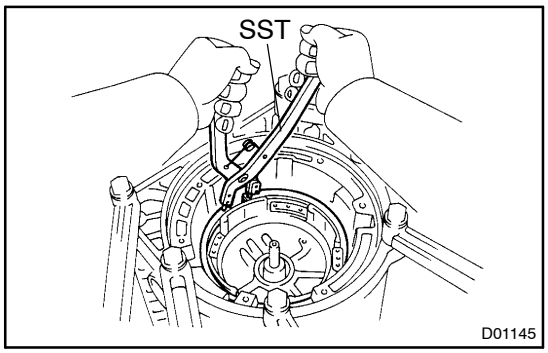

(e) Using SST, install the snap ring.
SST 09350–30020 (09350–07060)

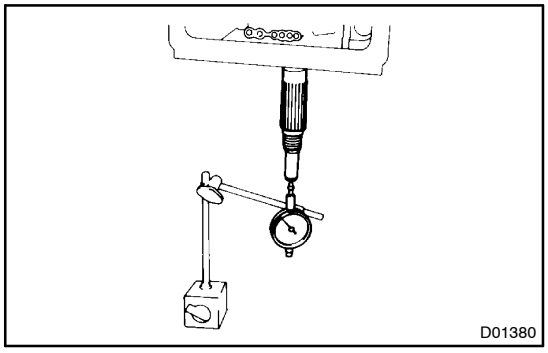

13. CHECK OUTPUT SHAFT

(a) Using a dial indicator, measure the end play of the output shaft with hand.
End play: 1.63 – 2.89 mm (0.064 – 0.114 in.)

If the values are non–standard, check for improper installation.

(b) Check to see that output shaft rotates smoothly.

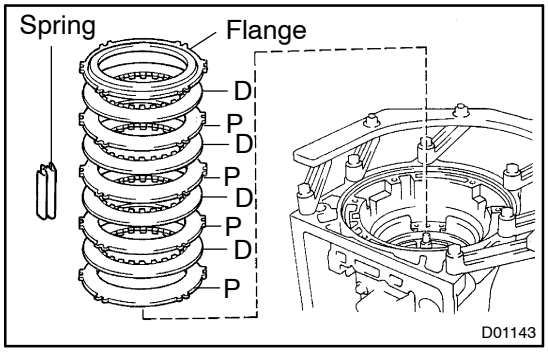

14. INSTALL FLANGES, PLATES AND DISCS OF O/D BRAKE

(a) Install the O/D brake pack (1 flange, 4 discs and 4 plates).
Install in order: P = Plate, D = Disc
P – D – P – D – P – D – P – D

(b) Install the flange (stepped ring) with the flat side of the flange facing the disc.

(c) Install the spring to the case.

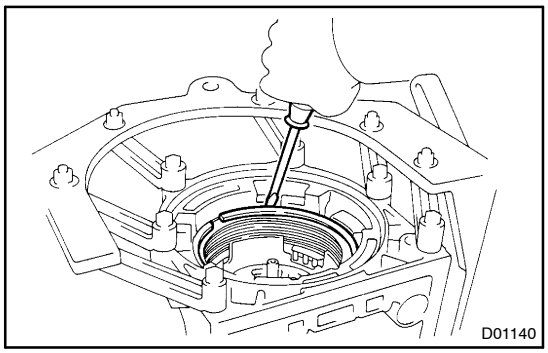

(d) Using a screwdriver, install the snap ring.

NOTICE:

Be sure the end gap of the snap ring is not aligned with cut-out portion of the brake drum.

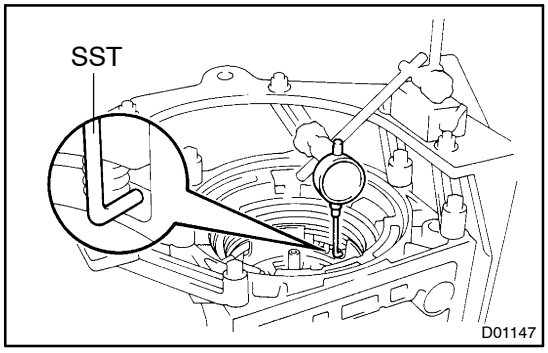

15. CHECK PISTON STROKE OF O/D BRAKE

(a) Place SST and a dial indicator onto the O/D brake piston.
SST 09350–30020 (09350–06120)

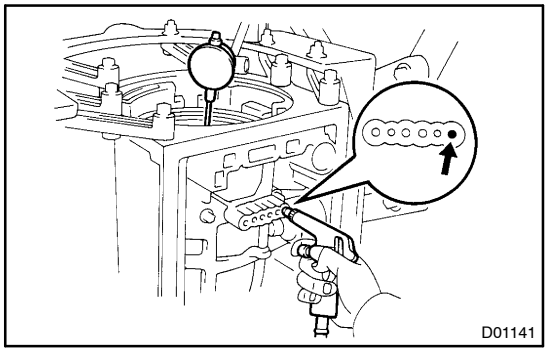

(b) Measure the stroke while applying and releasing compressed air (392 kPa, 4 kgf/cm^2, 57 psi).
Piston Stroke: 1.40 – 1.70 mm (0.055 – 0.067 in.)

If the piston stroke is less than the limit, parts may have been assembled incorrectly, so check and reassemble again.
If the piston stroke is non–standard, select another flange.
HINT:
There are 7 different thickness for the flange.
Flange thickness: mm (in.)

No.	Thickness	No.	Thickness
77	3.3 (0.130)	81	3.8 (0.150)
78	3.5 (0.138)	82	3.9 (0.154)
79	3.6 (0.142)	83	4.0 (0.157)
80	3.7 (0.146)	–	–

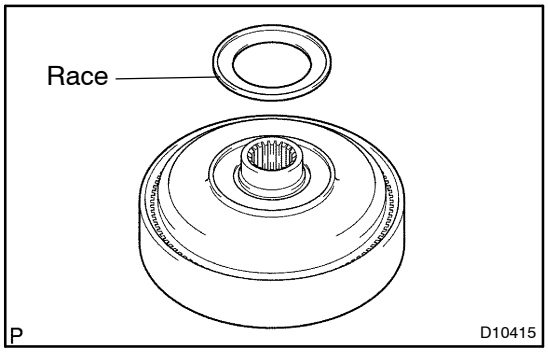

16. INSTALL O/D PLANETARY GEAR UNIT WITH O/D DIRECT CLUTCH & O/D ONE–WAY CLUTCH

(a) Coat the race with petroleum jelly and install it onto the O/D planetary ring gear.
Race diameter: mm (in.)

	Inside	Outside
Race	37.1 (1.461)	59.0 (2.323)

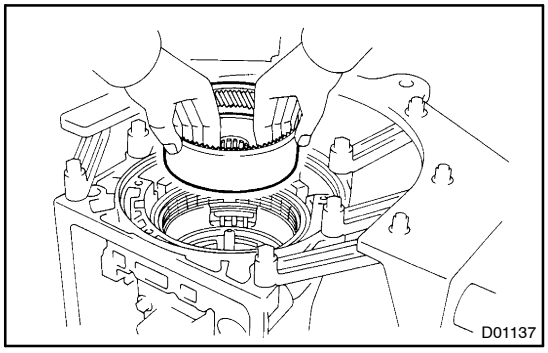

(b) Install the O/D planetary ring gear.

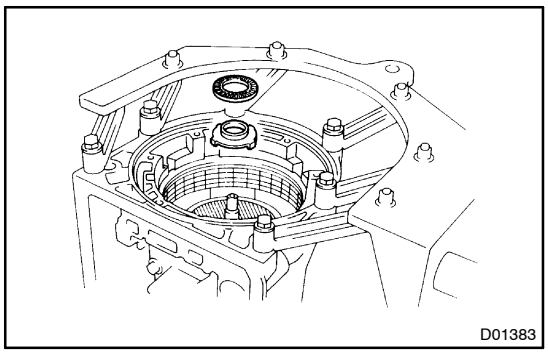

(c) Install the bearing and race onto the O/D planetary ring gear.
Bearing and race diameter: mm (in.)

	Inside	Outside
Bearing	25.9 (1.020)	47.0 (1.850)
Race	24.0 (0.945)	48.0 (1.890)

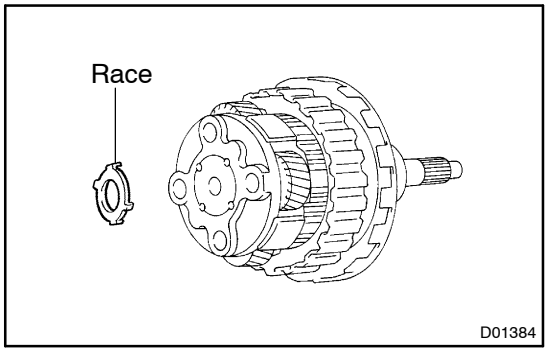

(d) Coat the race with petroleum jelly and install it onto the O/D planetary gear.
Race diameter: mm (in.)

	Inside	Outside
Race	27.2 (1.071)	42.0 (1.654)

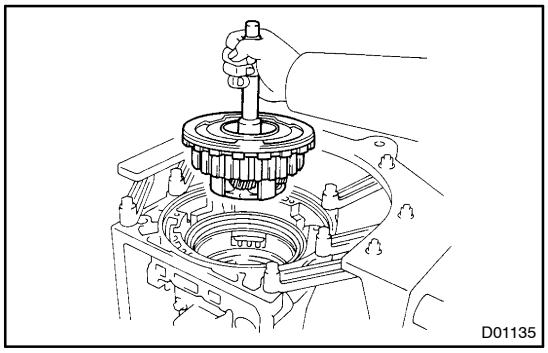

(e) Install the O/D planetary gear with the O/D direct clutch & O/D one–way clutch.

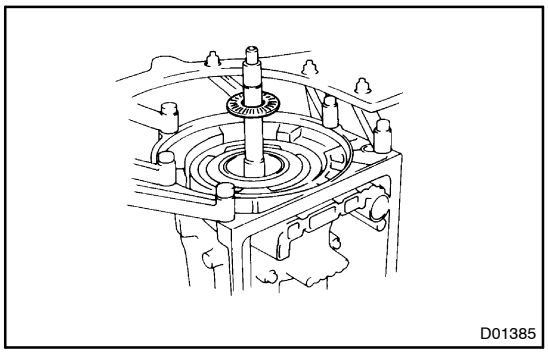

(f) Install the assembled bearing & race onto the O/D direct clutch.
Assembled bearing & race diameter: mm (in.)

	Inside	Outside
Assembled bearing & race	28.8 (1.134)	50.4 (1.984)

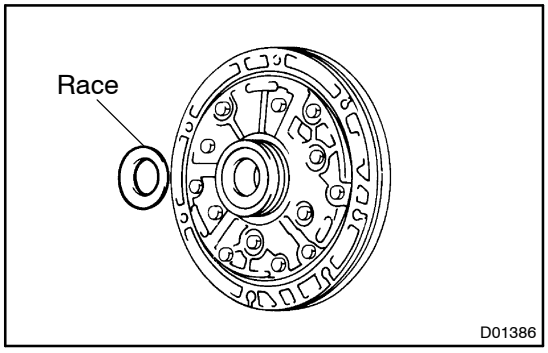

17. INSTALL OIL PUMP INTO CASE

(a) Coat the race with petroleum jelly and install it onto the oil pump.
Race diameter: mm (in.)

	Inside	Outside
Race	28.1 (1.106)	47.5 (1.870)

(b) Coat a new O–ring with ATF and install it around the pump body.

(c) Place the oil pump through the input shaft, and align the bolt holes of the pump body with the transmission case.

(d) Hold the input shaft, and lightly press the oil pump body to slide the oil seal rings into the overdrive direct clutch drum.

NOTICE:
Do not push on the oil pump strongly, or the oil seal ring will stick to the direct clutch drum.

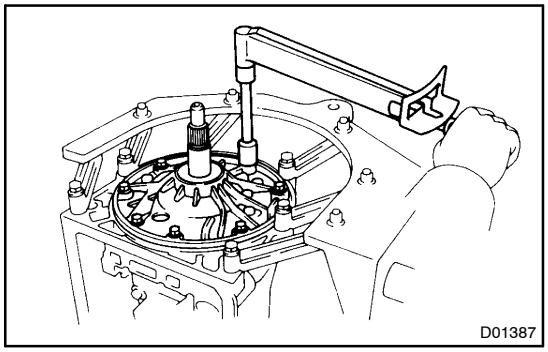

(e) Install the 7 bolts.
Torque: 21 N·m (215 kgf·cm, 16 ft·lbf)

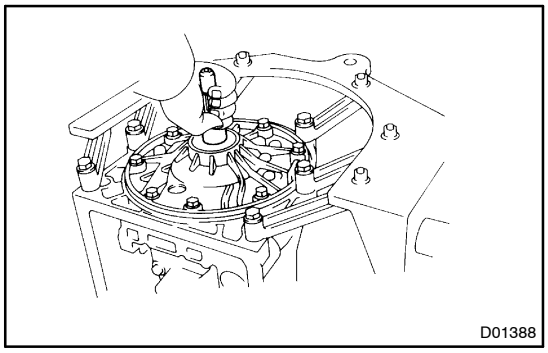

18. CHECK INPUT SHAFT ROTATION

Make sure the input shaft rotates smoothly.

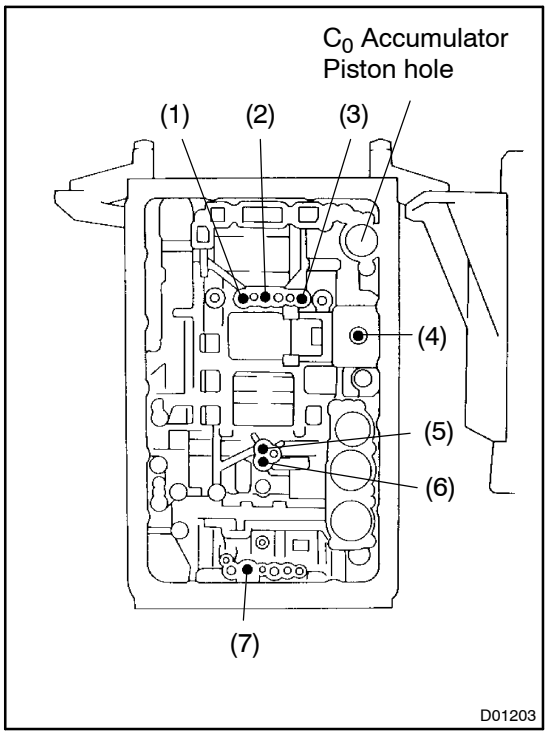

19. INDIVIDUAL PISTON OPERATION INSPECTION

Check for the sound of operation while applying compressed air into the oil holes indicated in the illustration.

HINT:

When inspecting the O/D direct clutch, check with the C_0 accumulator piston hole closed.

If there is no noise, disassemble and check the installation condition of the parts.

(1) Forward clutch
(2) Direct clutch
(3) O/D brake
(4) 3rd coast brake
(5) 3rd brake
(6) 2nd brake
(7) 1st & reverse brake

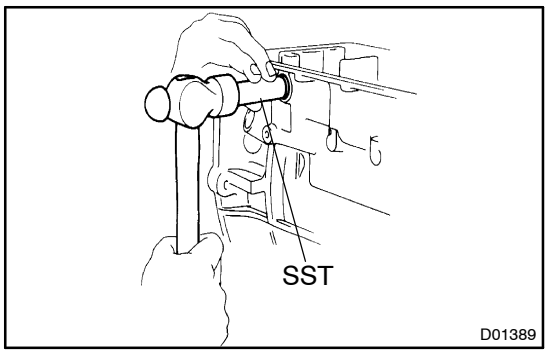

20. INSTALL MANUAL VALVE LEVER, SHAFT AND OIL SEAL

(a) Using SST, drive in a 2 new oil seals.
SST 09350–30020 (09350–07110)

(b) Coat the oil seal lip with MP grease.

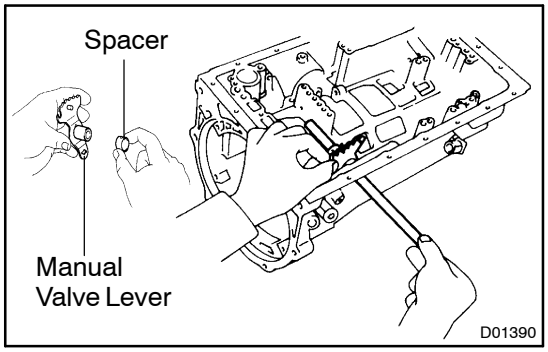

(c) Install a new spacer to the manual valve lever.
(d) Install the manual valve lever shaft to the transmission case through the manual valve lever.

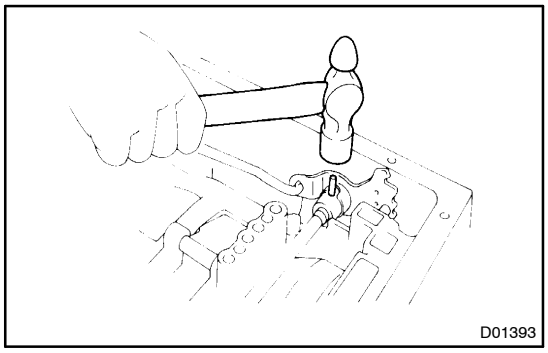

(e) Using a hammer, drive in a new spring pin.

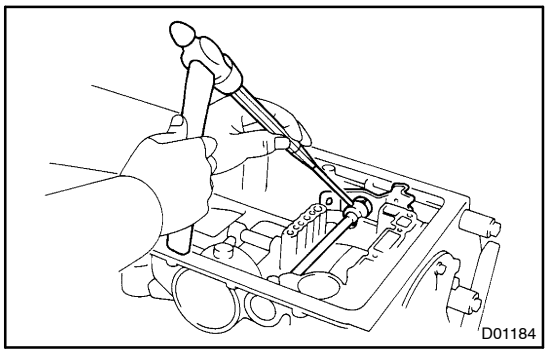

(f) Match the manual valve lever indentation with the spacer hole and stake them together with the punch.
(g) Make sure the shaft rotates smoothly.

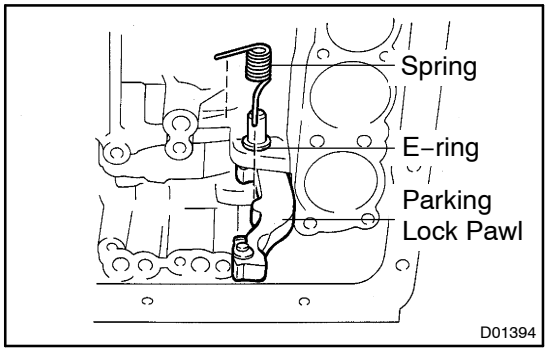

21. INSTALL PARKING LOCK PAWL AND ROD

(a) Install the E–ring to the shaft.
(b) Install the parking lock pawl, shaft and spring.

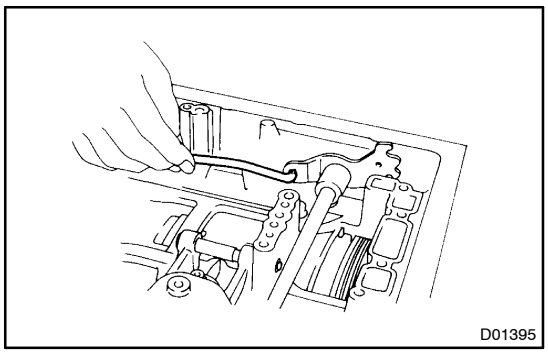

(c) Connect the parking lock rod to the manual valve lever.

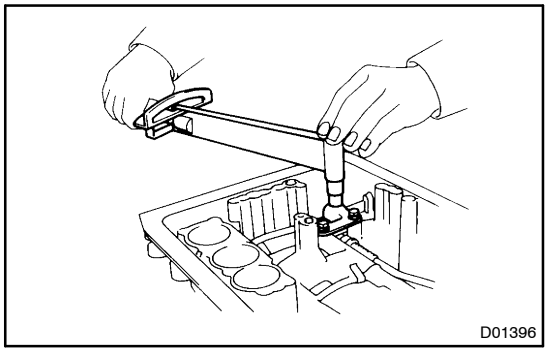

(d) Place the parking lock pawl bracket onto the transmission case and torque the 3 bolts.
Torque: 7.4 N·m (75 kgf·cm, 65 in.·lbf)

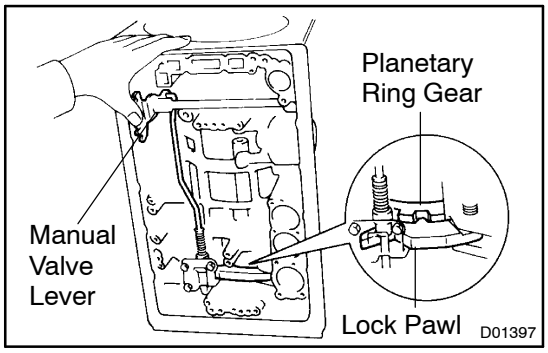

(e) Shift the manual valve lever to the P position, and confirm the planetary ring gear is correctly locked up by the lock pawl.

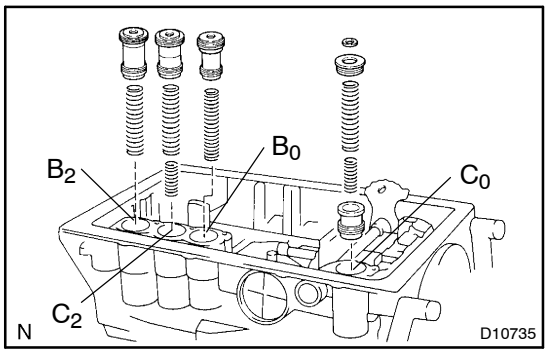

22. INSTALL ACCUMULATOR SPRINGS AND PISTONS

(a) Coat new O–rings with ATF and install them to the pistons.

(b) Install the 4 springs and 4 accumulator pistons to the holes.

HINT:
The pistons are marked in relief with either C_0, B_0, C_2 or B_2 to discriminate each other.

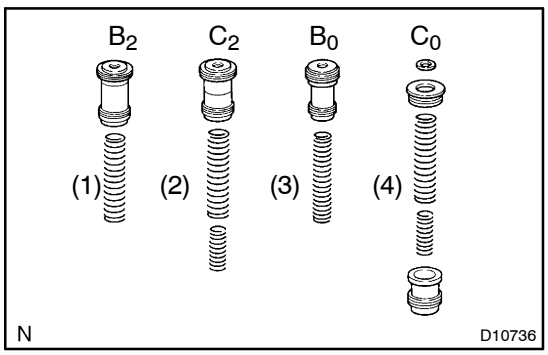

Accumulator spring:

Spring		Free length Outer diameter mm (in.)	Color
(1) B_2		80.91 (3.185) 19.97 (0.786)	Pink & white
(2) C_2	Inner	41.00 (1.614) 14.10 (0.555)	Orange
	Outer	75.20 (2.960) 20.10 (0.791)	White & Blue
(4) B_0		69.40 (2.732) 16.25 (0.640)	White
(5) C_0	Inner	32.92 (1.296) 14.03 (0.552)	Red
	Outer	56.00 (2.204) 20.59 (0.811)	Light green

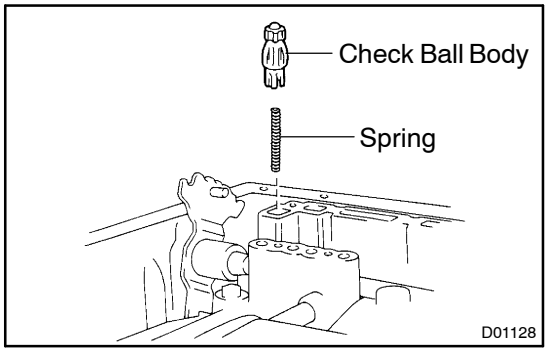

23. INSTALL SPRING AND CHECK BALL BODY

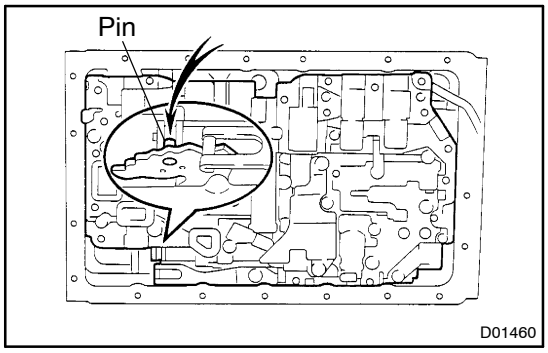

24. INSTALL VALVE BODY

(a) Align the groove of the manual valve with the pin of the lever.

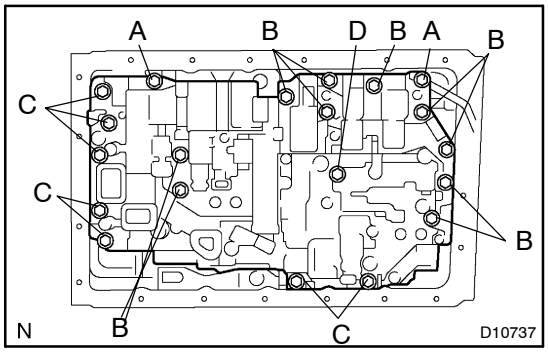

(b) Install the 20 bolts.
Torque: 9.8 N·m (100 kgf·cm, 7 ft·lbf)

HINT:
Each bolt length is indicated below.
Blot length:
Bolt A: 23 mm (0.866 in.)
Bolt B: 28 mm (1.102 in.)
Bolt C: 36 mm (1.417 in.)
Bolt D: 55 mm (2.165 in.)

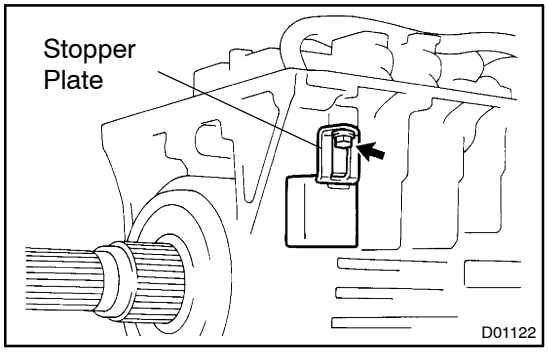

25. INSTALL TRANSMISSION WIRE

(a) Coat a new O–ring with ATF and install it to the transmission wire.

(b) Insert the transmission wire to the case and install the stopper plate with the bolt.
Torque: 5.4 N·m (55 kgf·cm, 48 in.·lbf)

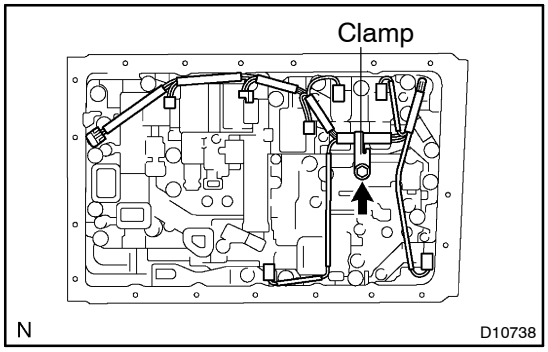

(c) Connect the 7 solenoid connectors.

(d) Install the ATF temperature sensor.

(e) Install the clamp and bolt.
Torque: 6.4 N·m (65 kgf·cm, 56 in.·lbf)

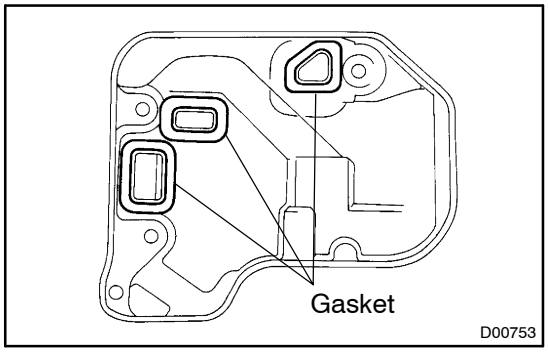

26. INSTALL OIL STRAINER AND GASKET

(a) Install 3 new gaskets to oil strainer.

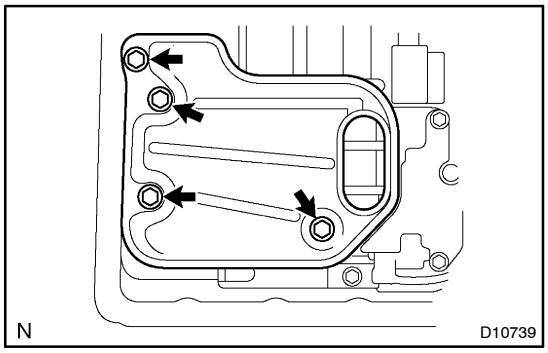

(b) Install the oil strainer with the 4 bolts.
Torque: 9.8 N·m (100 kgf·cm, 7 ft·lbf)

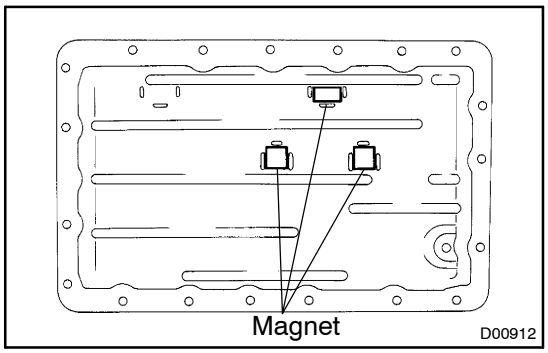

27. INSTALL OIL PAN

(a) Install the 3 magnets in the oil pan.

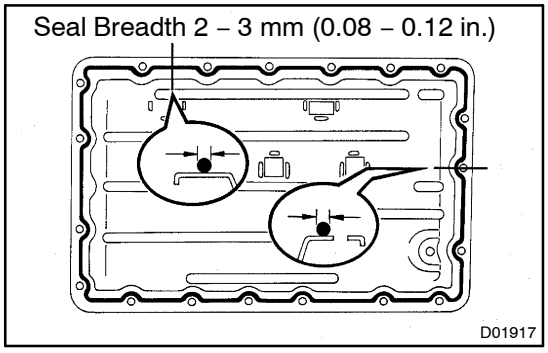

(b) Remove any FIPG material and be careful not to drop oil on the contacting surfaces of the transmission case and oil pan.

(c) Apply FIPG to the oil pan.
FIPG:
Part No.08826–00090, THREE BOND 1281 or equivalent

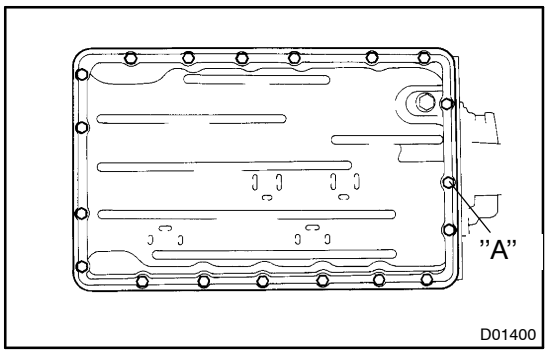

(d) Install and torque the 19 bolts.
Torque: 7.4 N·m (75 kgf·cm, 65 in.·lbf)

HINT:
Replace the only "A" bolt with a new one.

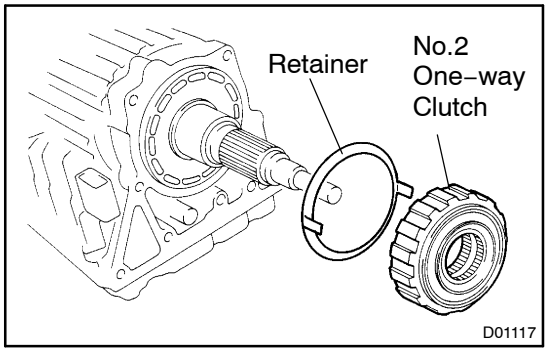

28. INSTALL ONE–WAY CLUTCH

(a) Install the retainer and the No.2 one–way clutch.

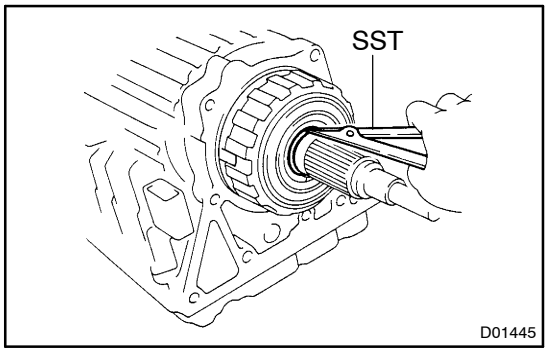

(b) Using SST, install the snap ring.
SST 09350–30020 (09350–07070)

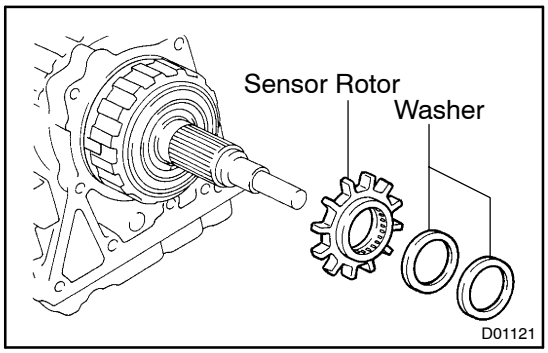

29. INSTALL VEHICLE SPEED SENSOR ROTOR

Install the vehicle speed sensor rotor and 2 washers.

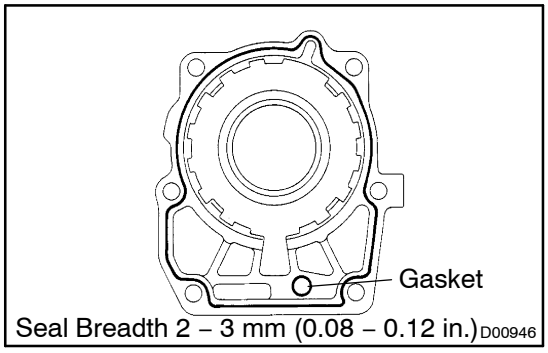

30. INSTALL EXTENSION HOUSING

(a) Install the gasket from the extension housing.

HINT:

Take care not to drop the gasket.

(b) Clean the threads of the bolts and case with white gasoline.

(c) Apply FIPG to the extension housing.
FIPG:
Part No.08826–00090, THREE BOND 1281 or equivalent

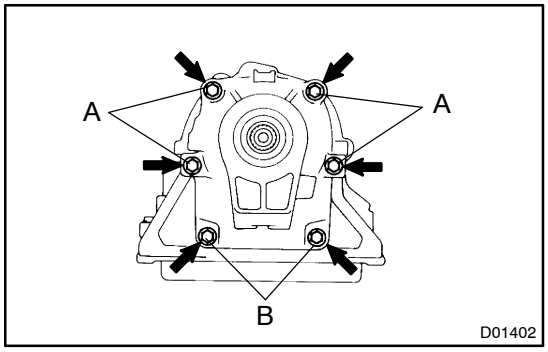

(d) Install the extension housing with new 6 bolts.
Torque: 34 N·m (345 kgf·cm, 25 ft·lbf)

HINT:

Each blot length is indicated below.

Bolt length:
Bolt A: 45 mm (1.772 in.)
Bolt B: 35 mm (1.378 in.)

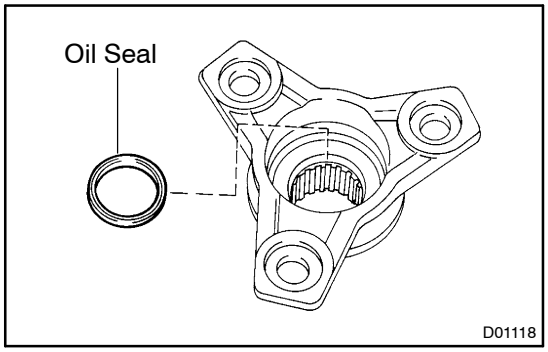

31. INSTALL TRANSMISSION OUTPUT FLANGE

(a) Using SST, install a new oil seal to the output flange.
SST 09950–60010 (09951–00350)
09950–70010 (09951–07100)

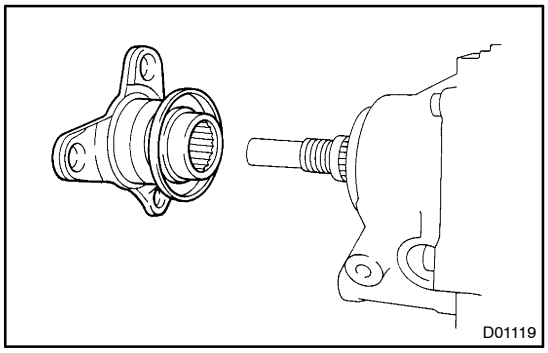

(b) Install the output flange.

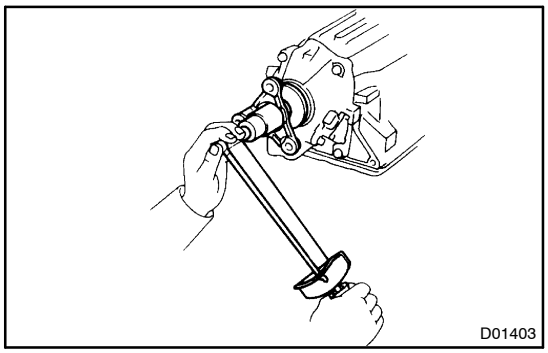

(c) Using a deeper socket wrench of 30 mm, install a new nut.
Torque: 126 N·m (1,280 kgf·cm, 92 ft·lbf)

HINT:
Shift the manual valve lever to the P position.

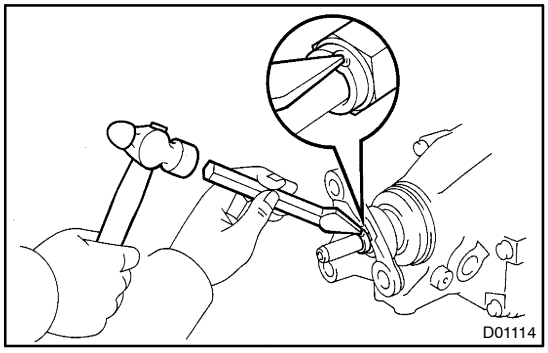

(d) Using a hammer and chisel, stake the nut.

32. REMOVE TRANSMISSION CASE FROM OVERHAUL ATTACHMENT

33. INSTALL TRANSMISSION HOUSING

(a) Clean the threads of the bolts and case with white gasoline.

(b) Apply seal packing or equivalent to the 6 bolts.
Seal packing:
Part No. 08833–00070, THREE BOND 1324 or equivalent.

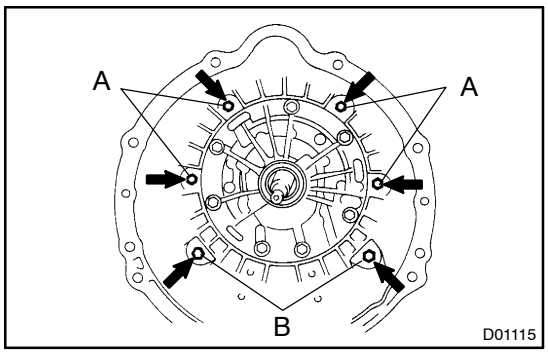

(c) Install the transmission housing with the 6 bolts.
Torque:
A (14 mm bolt): 34 N·m (345 kgf·cm, 25 ft·lbf)
B (17 mm bolt): 57 N·m (580 kgf·cm, 42 ft·lbf)

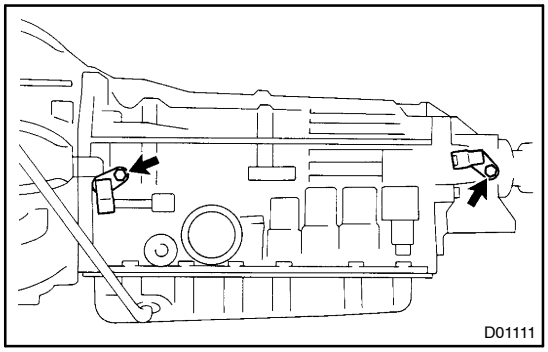

34. INSTALL VEHICLE SPEED SENSORS

(a) Coat 2 new O–rings with ATF and install it to the speed sensor.

(b) Install the 2 vehicle speed sensors.

(c) Install the bolts.
Torque: 5.4 N·m (55 kgf·cm, 48 in.·lbf)

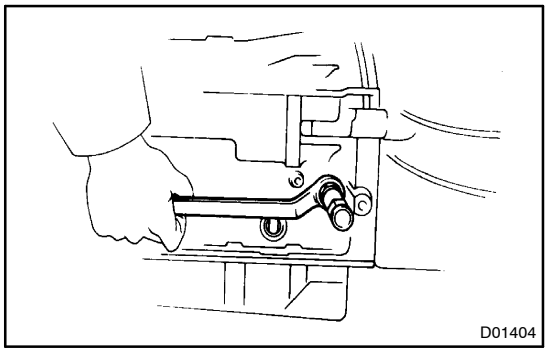

35. INSTALL UNION AND ELBOW

(a) Coat 2 new O–rings with ATF, install them to union and elbow.

(b) Install the union.
Torque: 29 N·m (300 kgf·cm, 22 ft·lbf)

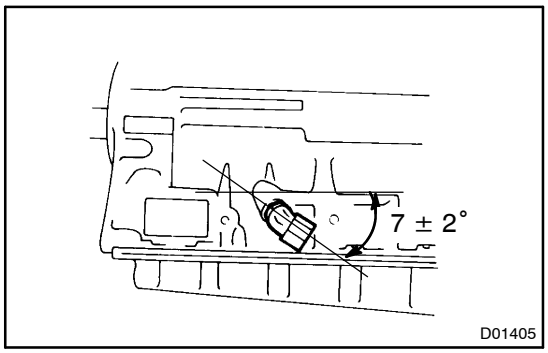

(c) Install the elbow.
Torque: 29 N·m (300 kgf·cm, 22 ft·lbf)

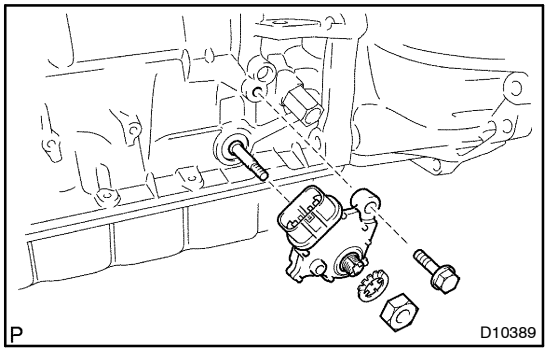

36. INSTALL PARK/NEUTRAL POSITION SWITCH

(a) Install the park/neutral position switch onto the manual valve lever shaft and temporarily install the adjusting bolt.

(b) Install the new lock washer. Install and torque the nut.
Torque: 6.9 N·m (70 kgf·cm, 61 in.·lbf)

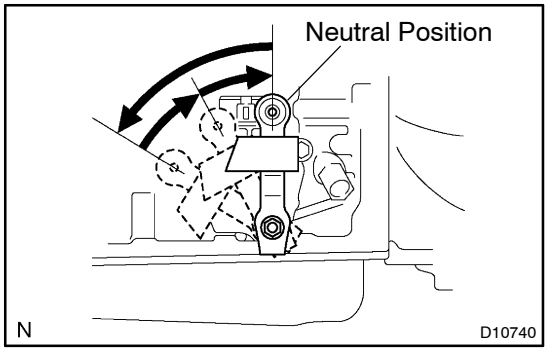

(c) Using the control shaft lever, fully turn the manual lever shaft back and return 2 notches. It is now in neutral.

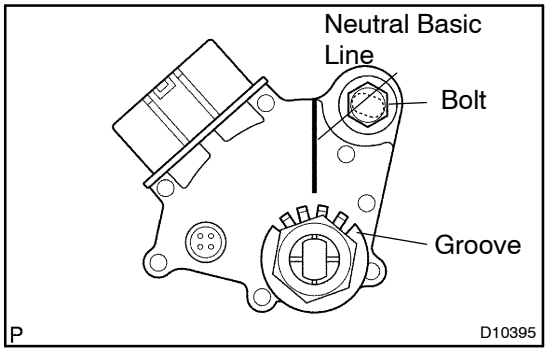

(d) Align the neutral basic line with the switch groove, and tighten the adjusting bolt.
Torque: 13 N·m (130 kgf·cm, 9 ft·lbf)

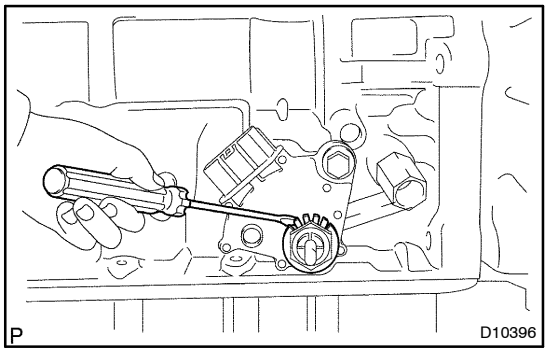

(e) Using a screwdriver, bend the tabs of the lock washer.
HINT:
Bend at least 2 of the lock washer tabs.

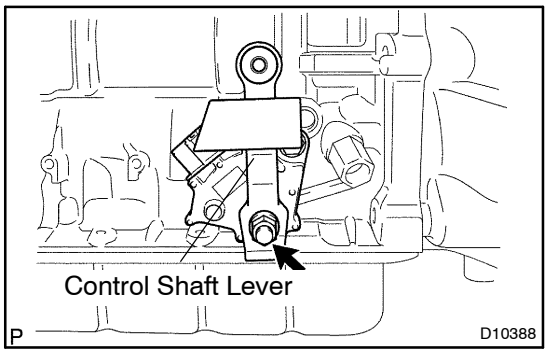

37. INSTALL CONTROL SHAFT LEVER
Install the washer and nut to the control shaft lever.
Torque: 16 N·m (160 kgf·cm, 12 ft·lbf)

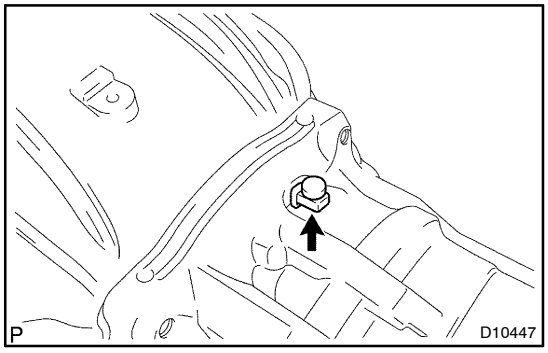

38. INSTALL BREATHER PLUG
Install the breather plug.