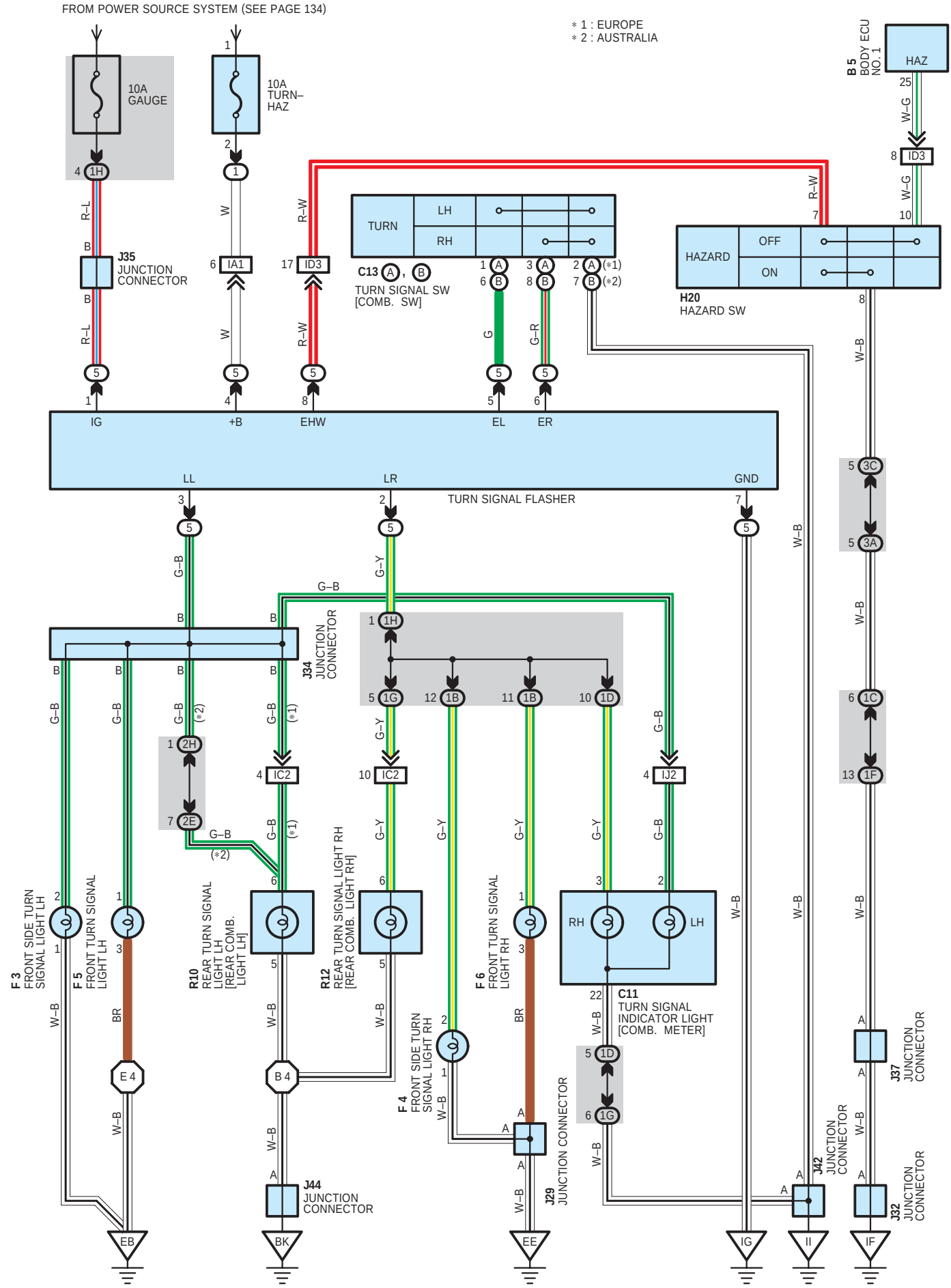# TURN SIGNAL AND HAZARD WARNING LIGHT (RHD)