(Cont. next page)

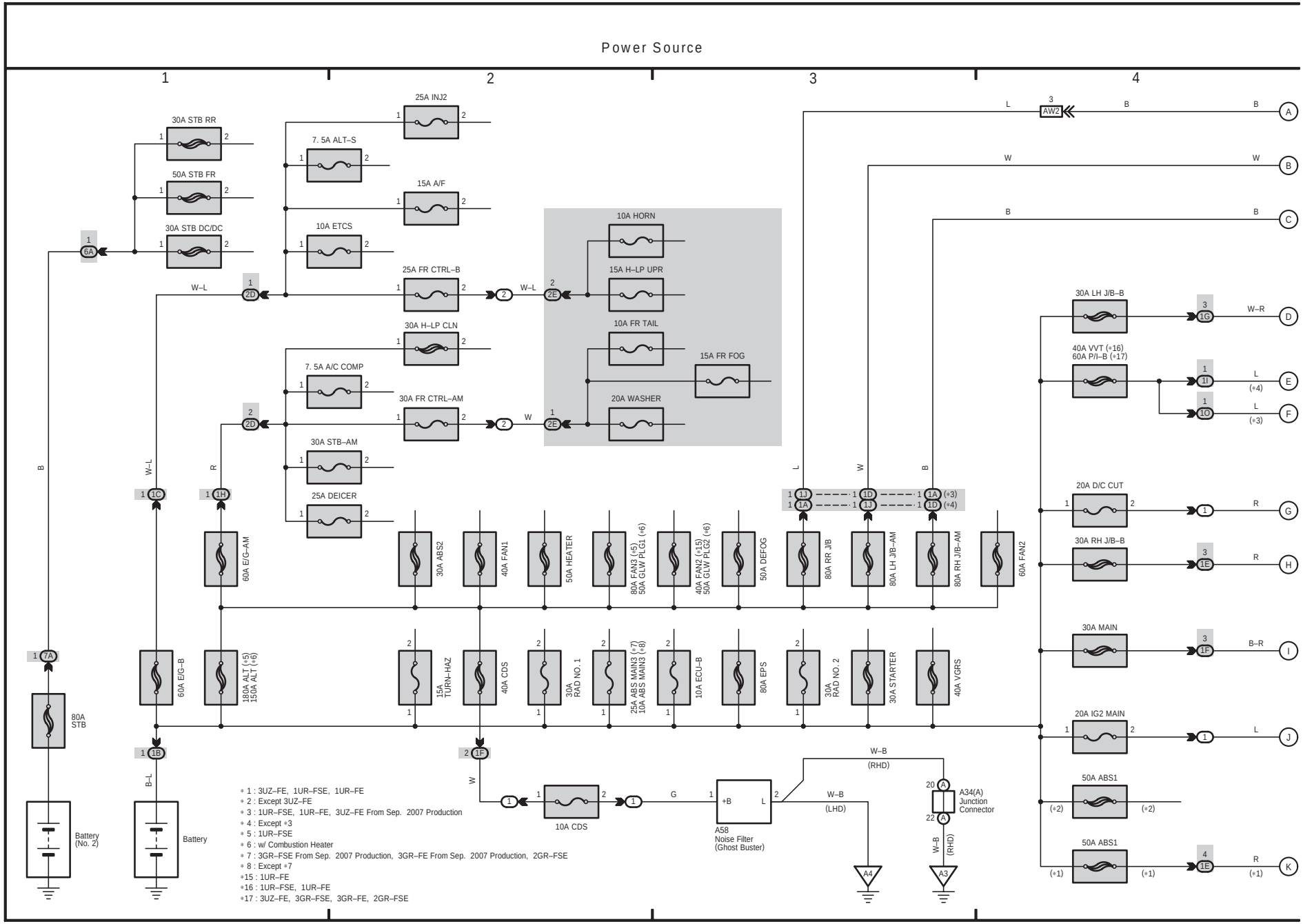

(Cont. next page)

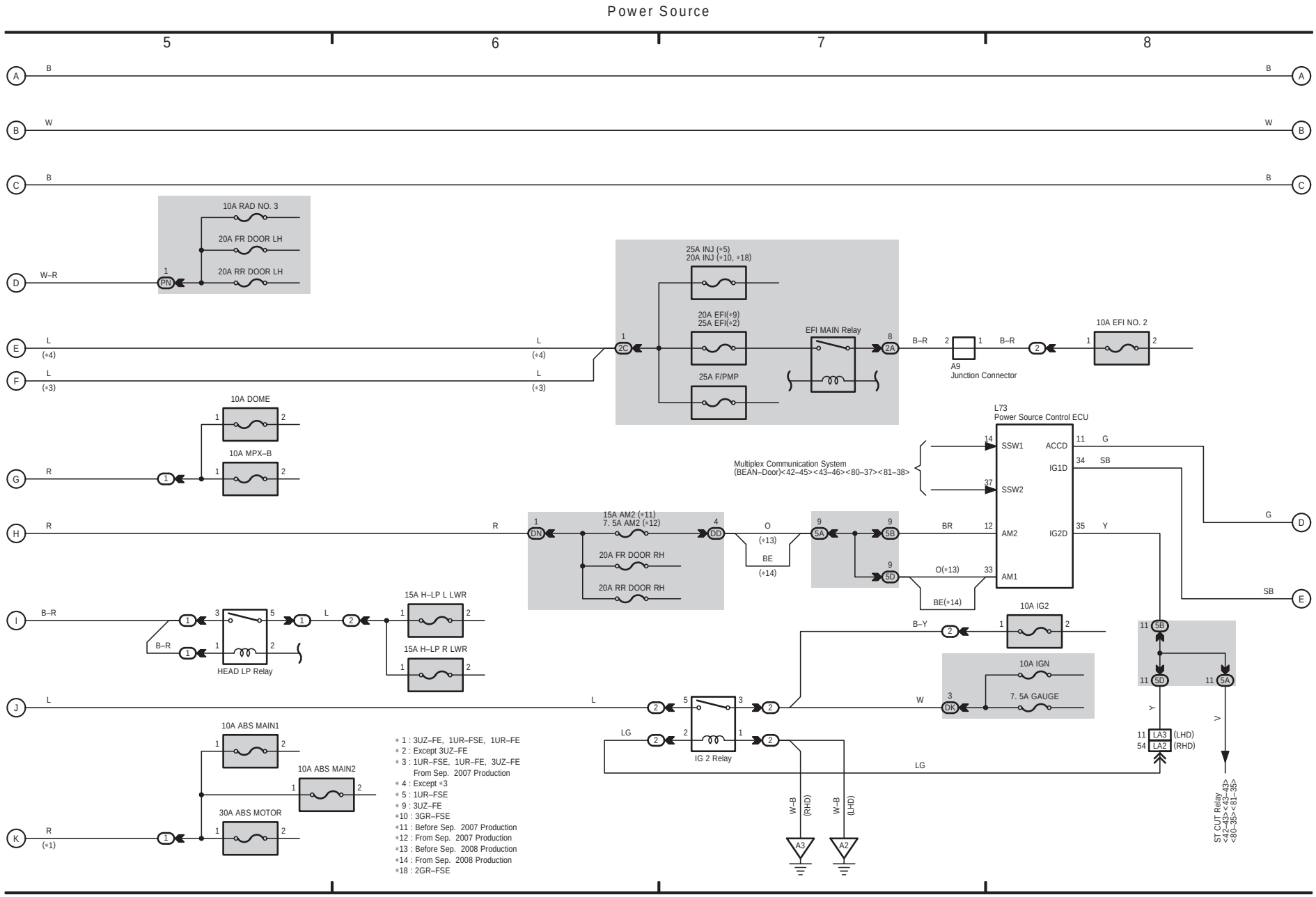
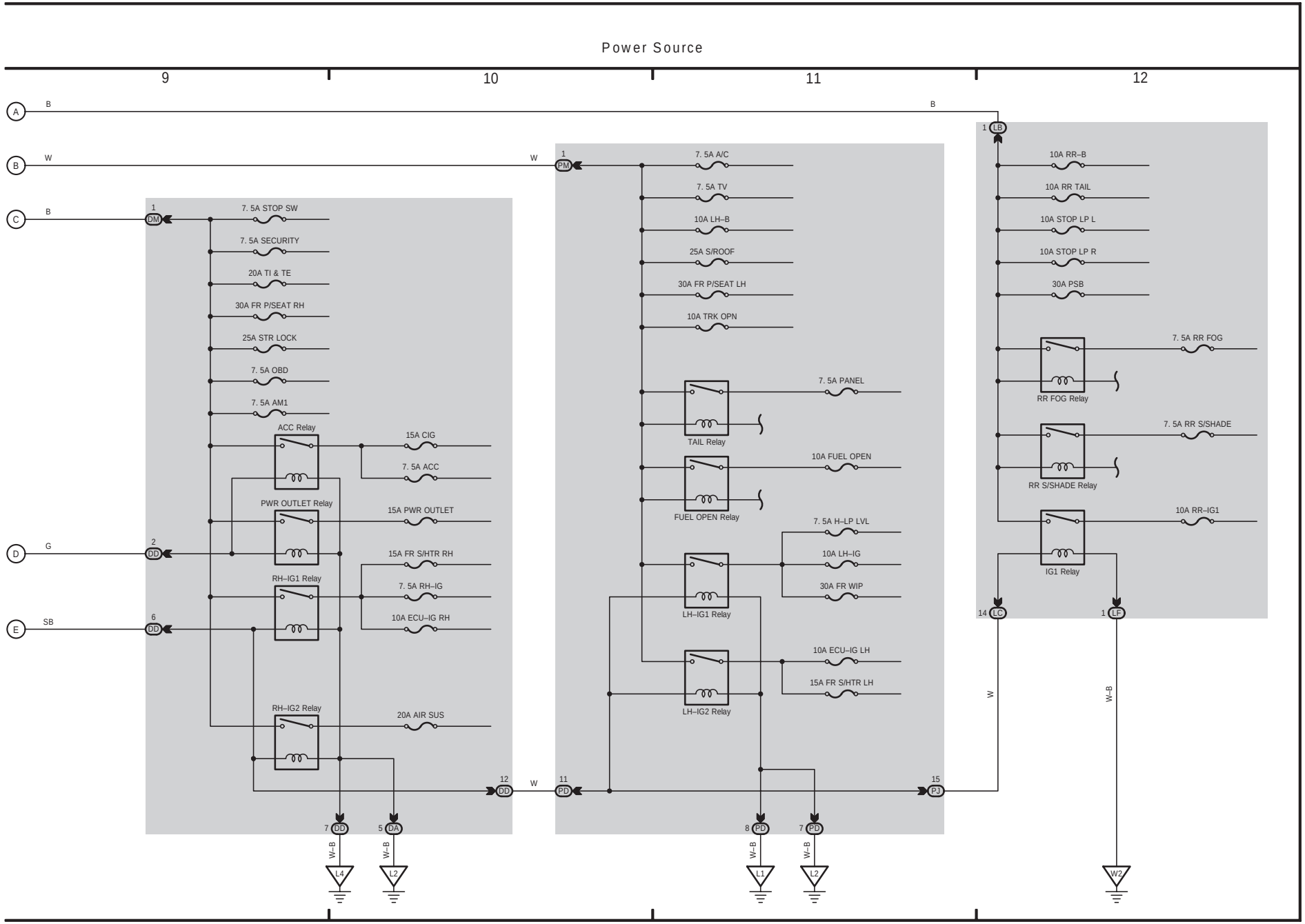
38 GS 460 / GS 430 / GS 350 / GS 300 (From Jul. 2006 Production) (Cont' d)