(Cont. next page)

Engine Control (2GR–FSE)

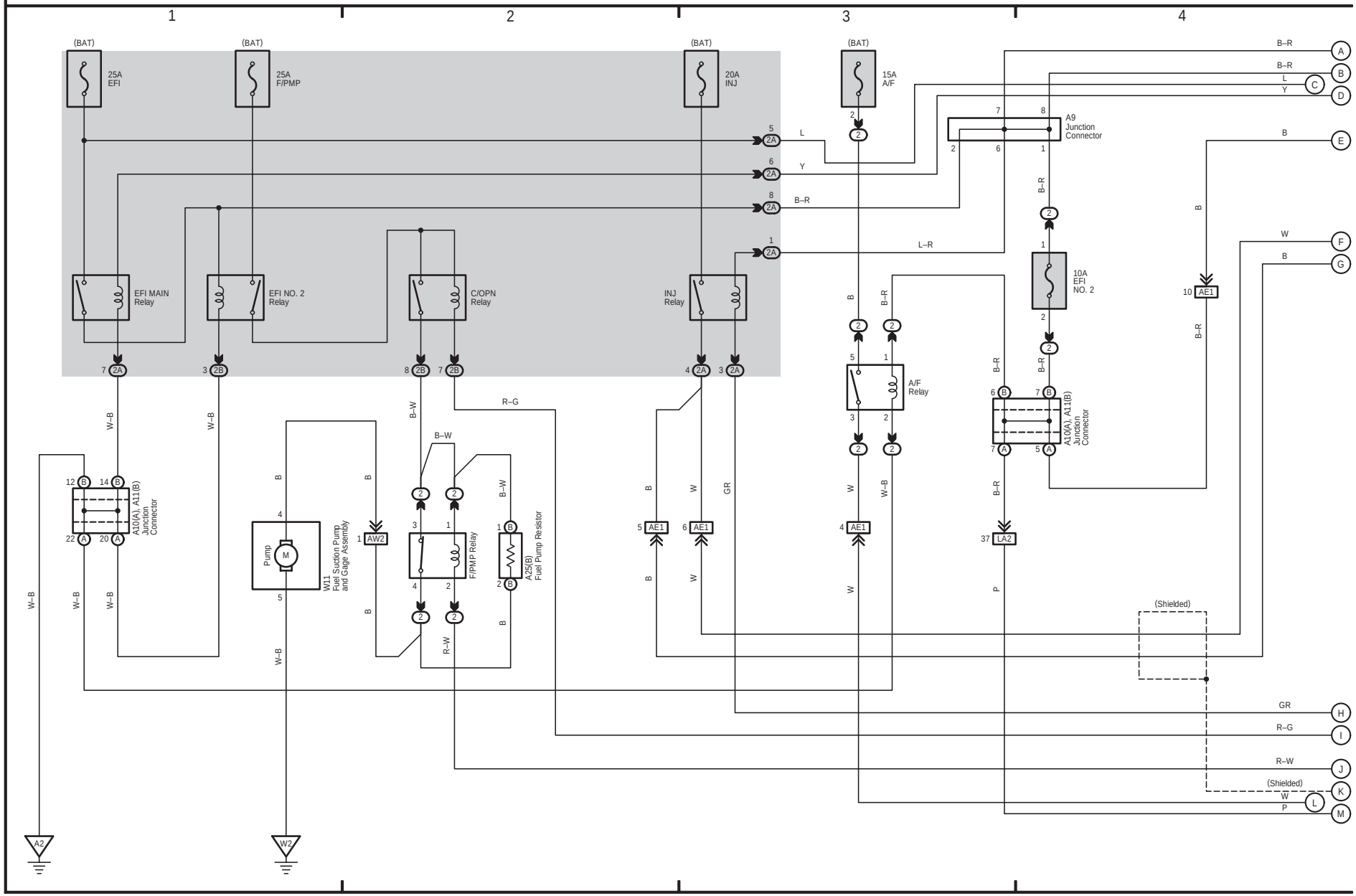

(Cont. next page)

Engine Control (2GR–FSE)

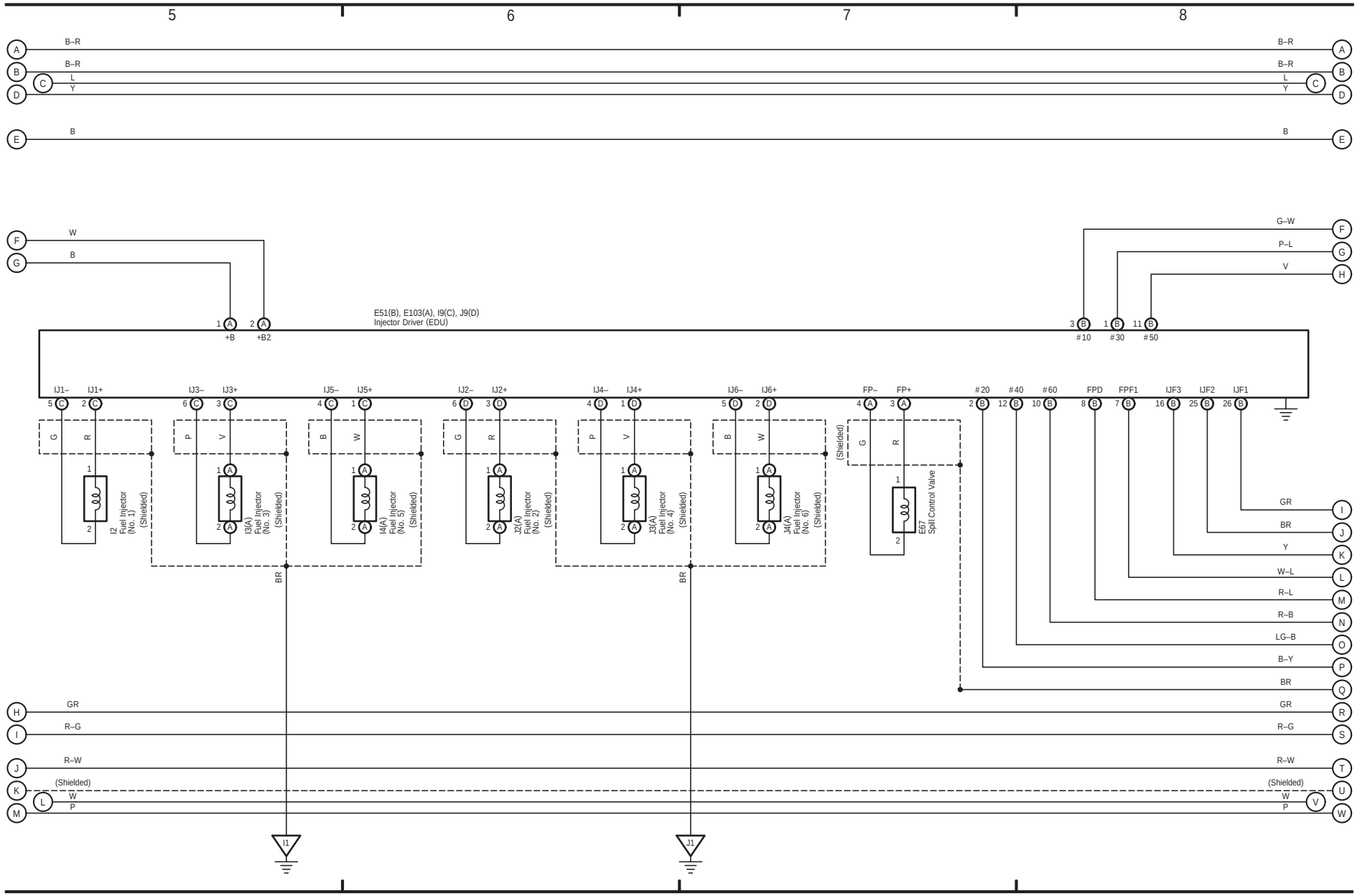

86 GS 460 / GS 430 / GS 350 / GS 300 (From Sep. 2009 Production) (Cont' d)

(Cont. next page)

Engine Control (2GR–FSE)

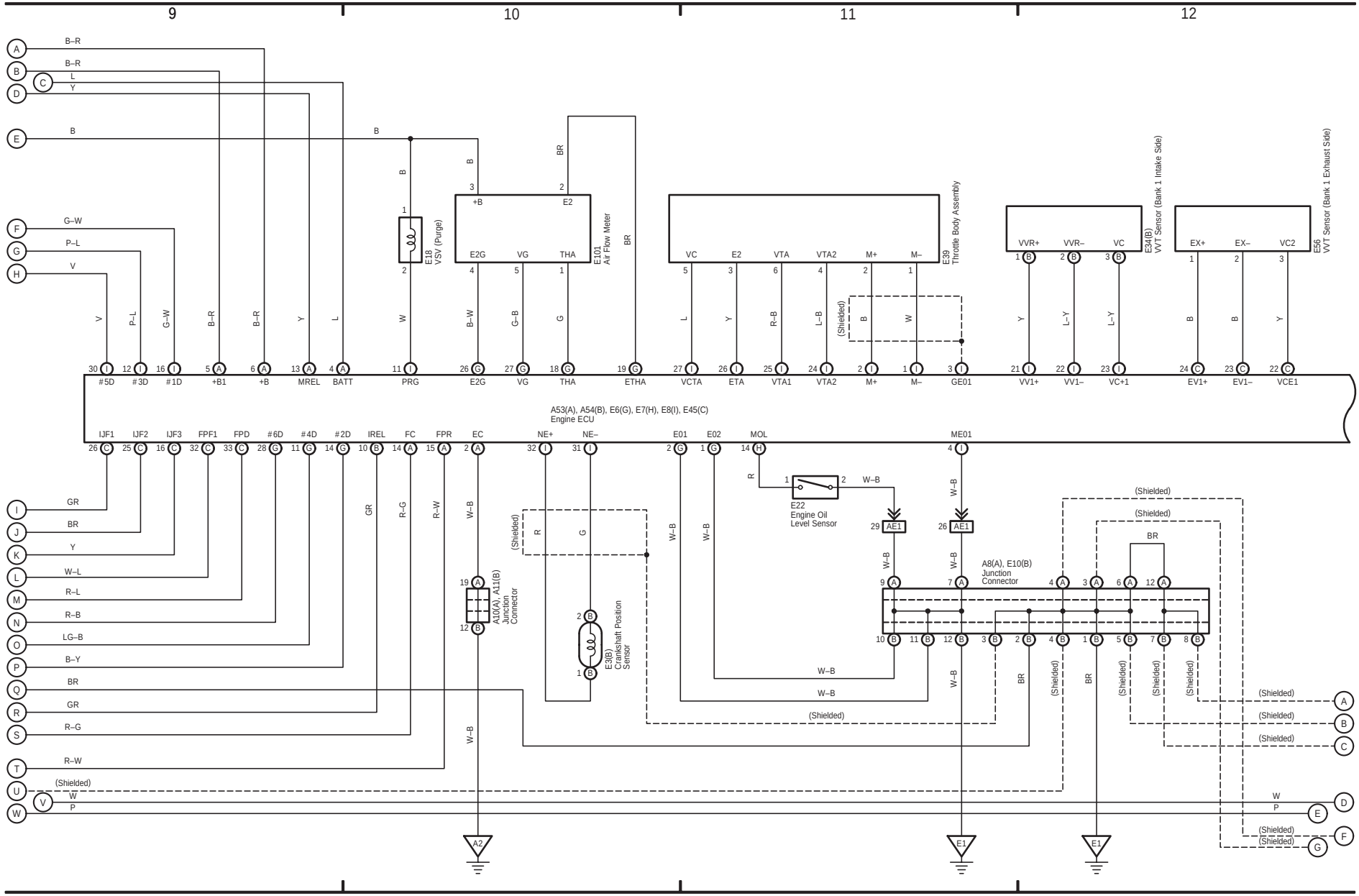

(Cont. next page)

Engine Control (2GR–FSE)

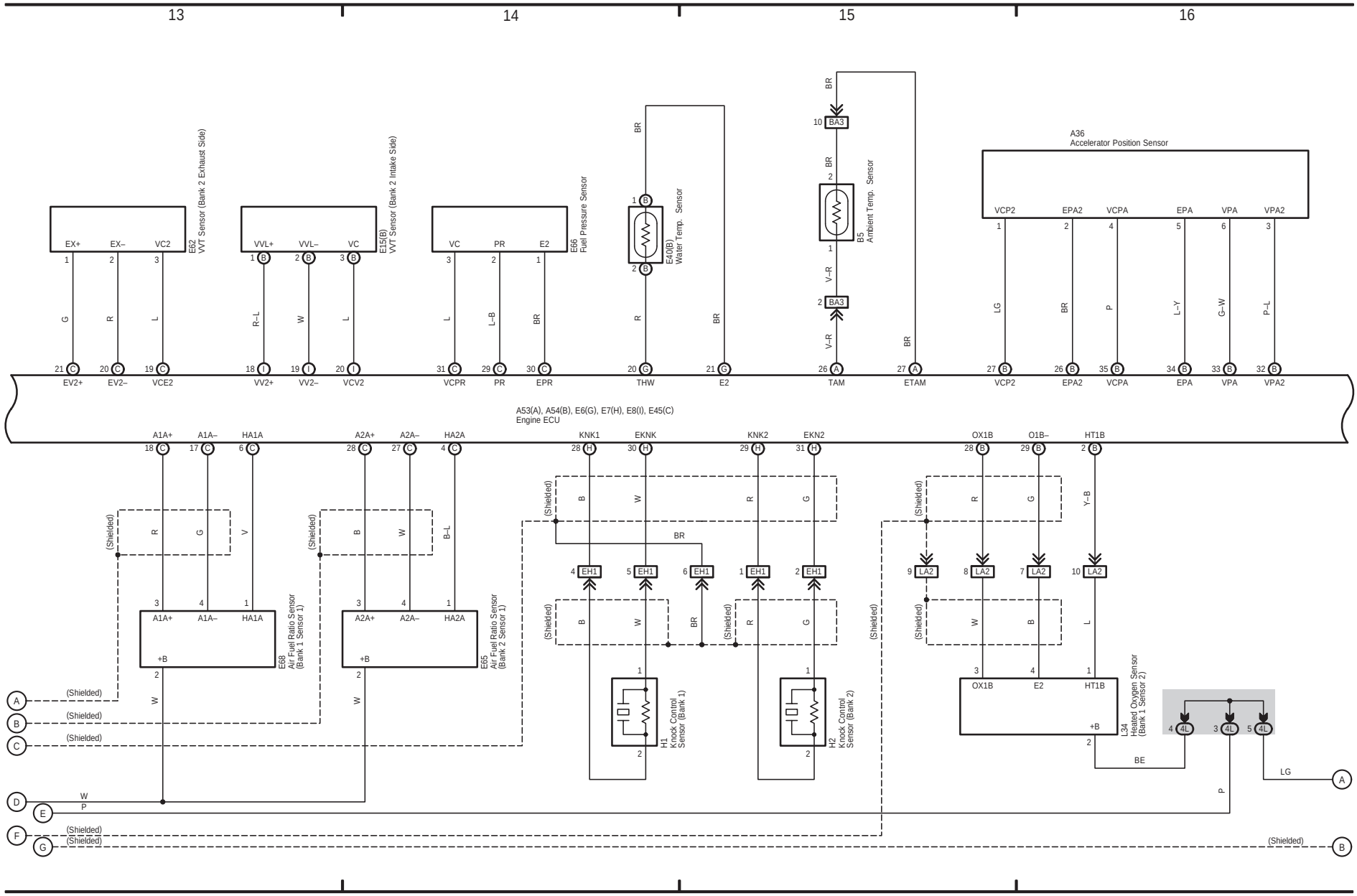

(Cont. next page)

Engine Control (2GR–FSE)

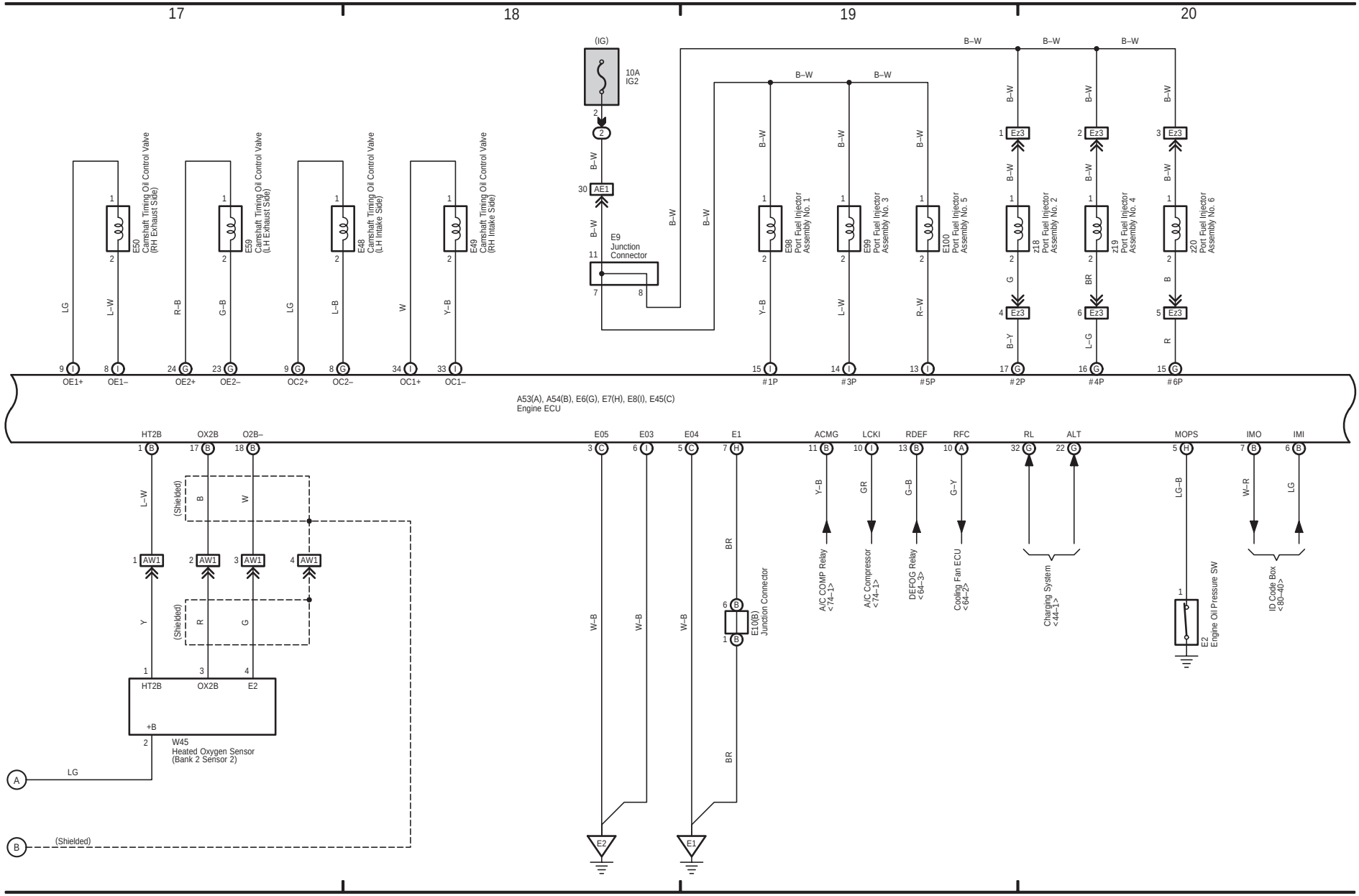

(Cont. next page)

Cruise Control (2GR–FSE)

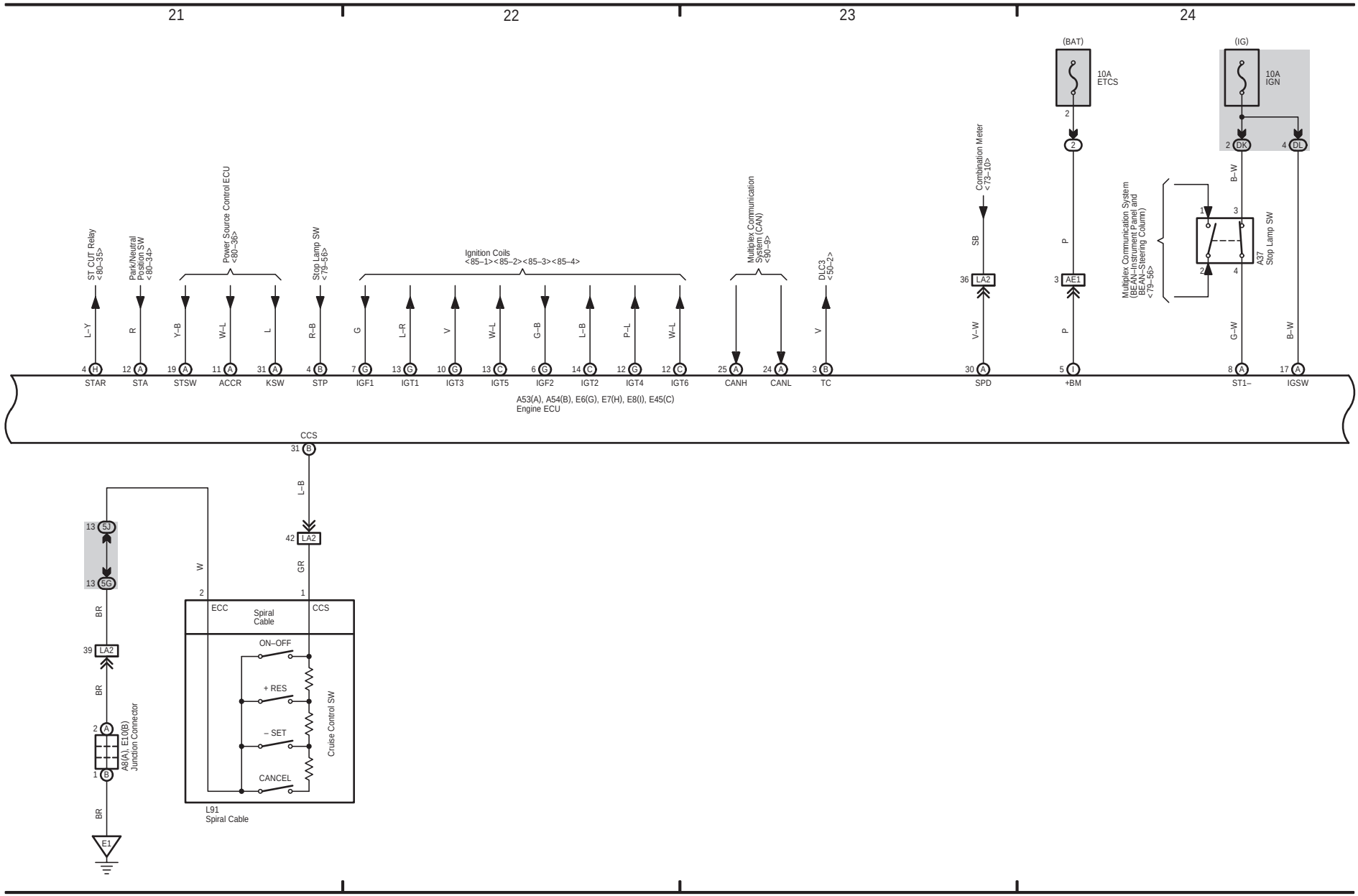

86 GS 460 / GS 430 / GS 350 / GS 300 (From Sep. 2009 Production) (Cont' d)

(Cont. next page)

ECT and A/T Indicator (2GR–FSE)

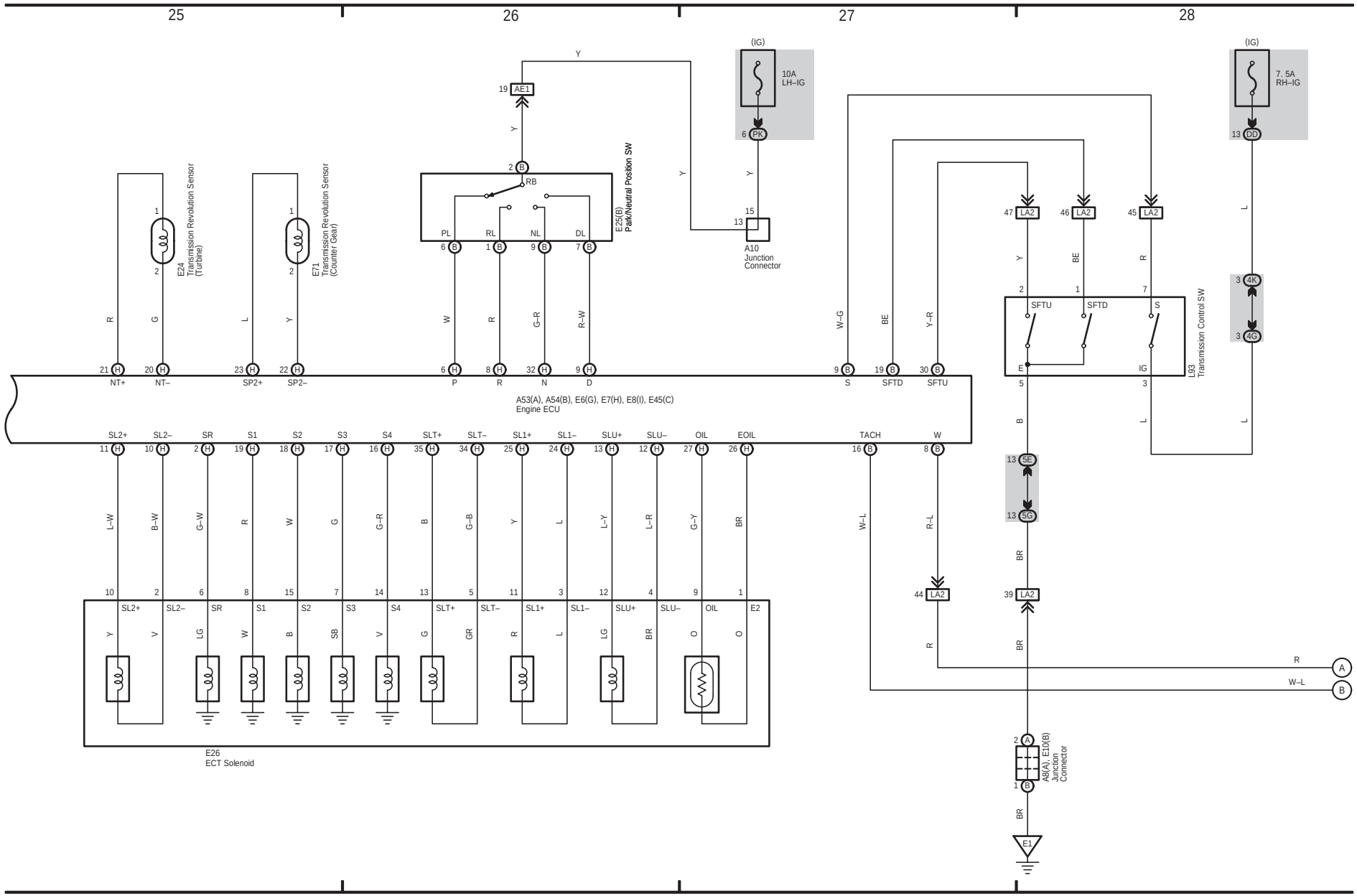
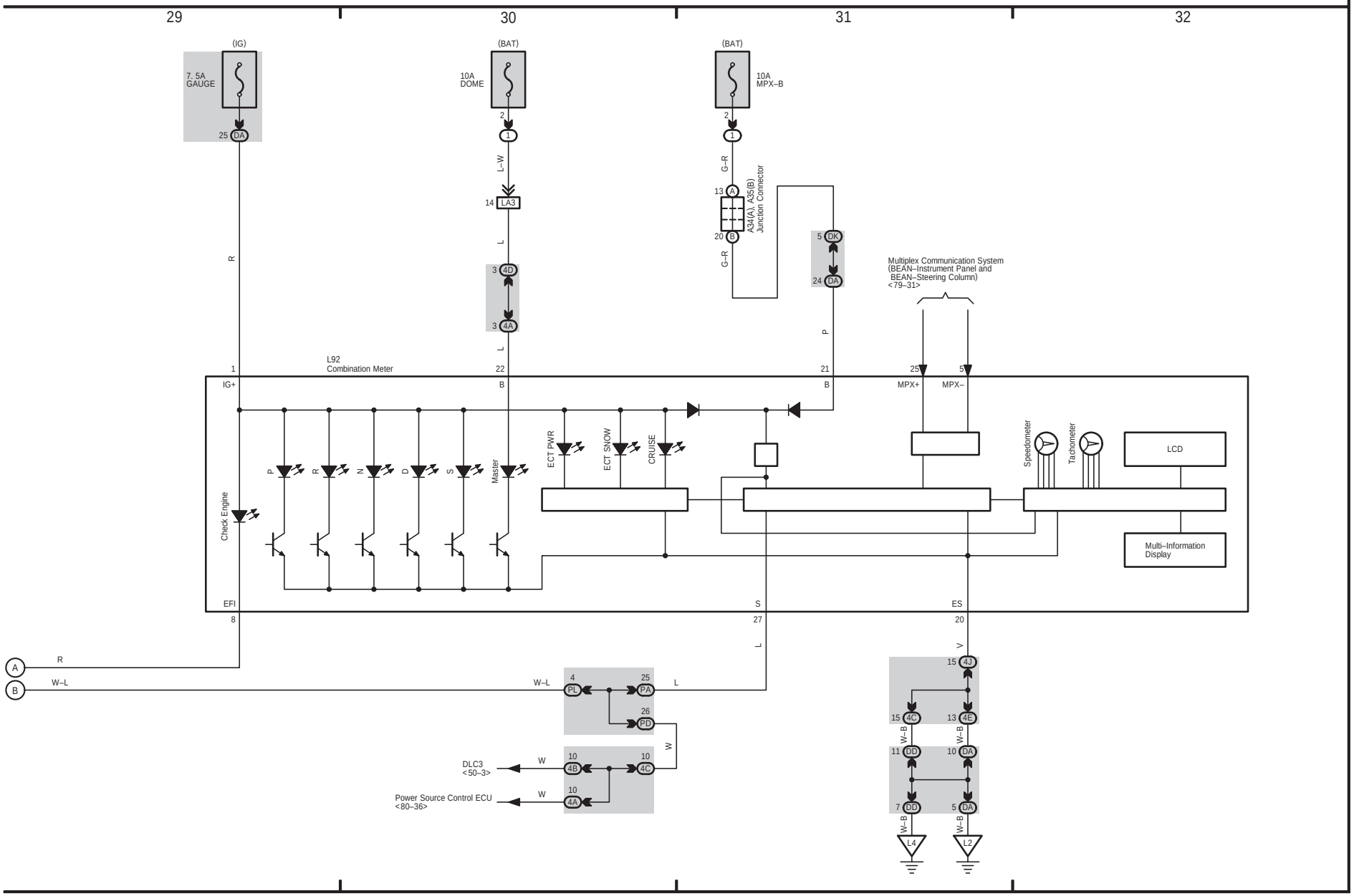
ECT and A/T Indicator (2GR–FSE)