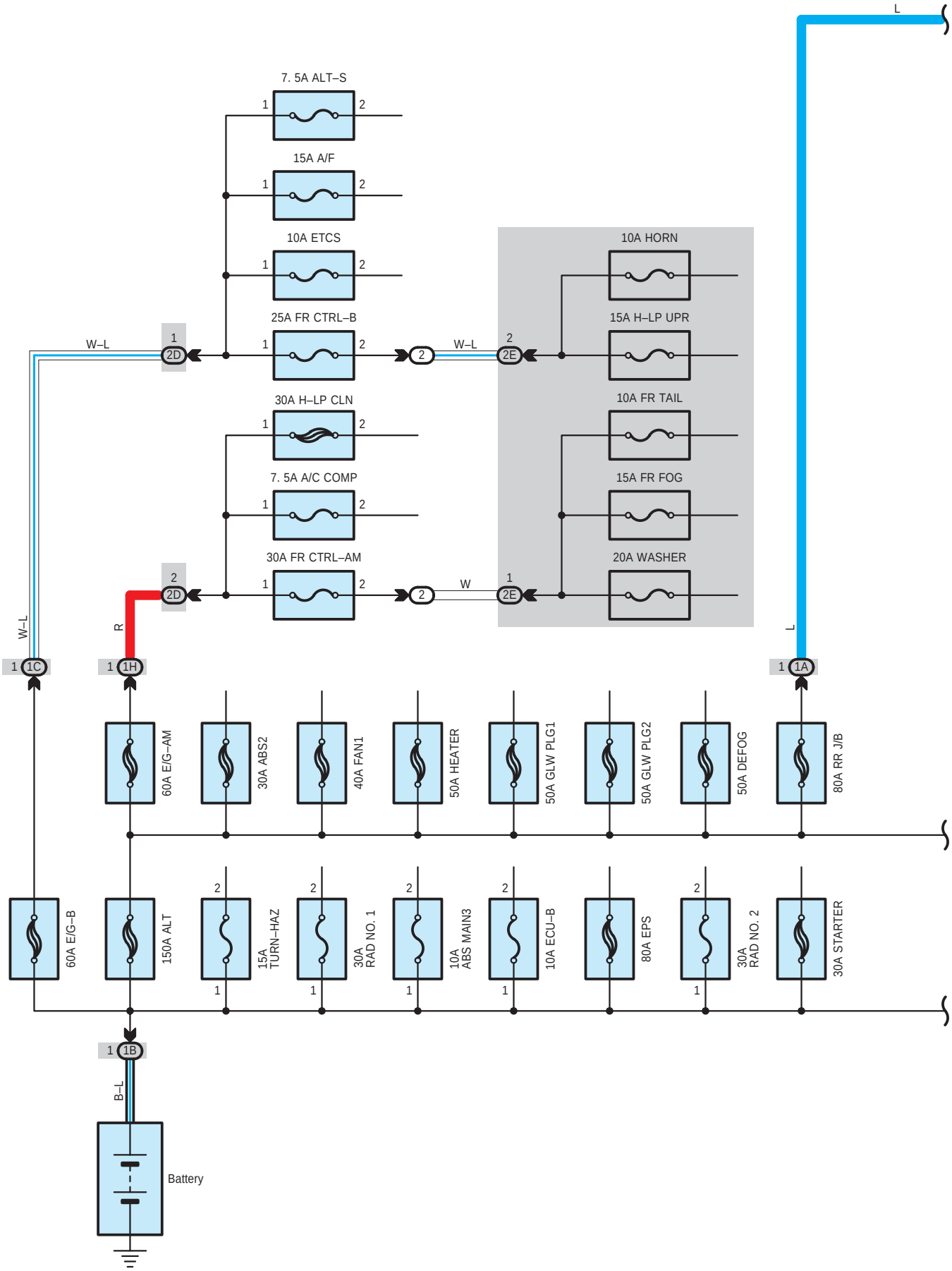
7. 5A ALT–S
15A A/F
10A ETCS
25A FR CTRL–B
30A H–LP CLN
7. 5A A/C COMP
30A FR CTRL–AM
10A HORN
15A H–LP UPR
10A FR TAIL
15A FR FOG
20A WASHER
W–L
W
R
L
B–L
2D
2E
1C
1H
1A
1B
60A E/G–AM
30A ABS2
40A FAN1
50A HEATER
50A GLW PLG1
50A GLW PLG2
50A DEFOG
80A RR J/B
60A E/G–B
150A ALT
15A TURN–HAZ
30A RAD NO. 1
10A ABS MAIN3
10A ECU–B
80A EPS
30A RAD NO. 2
30A STARTER
Battery

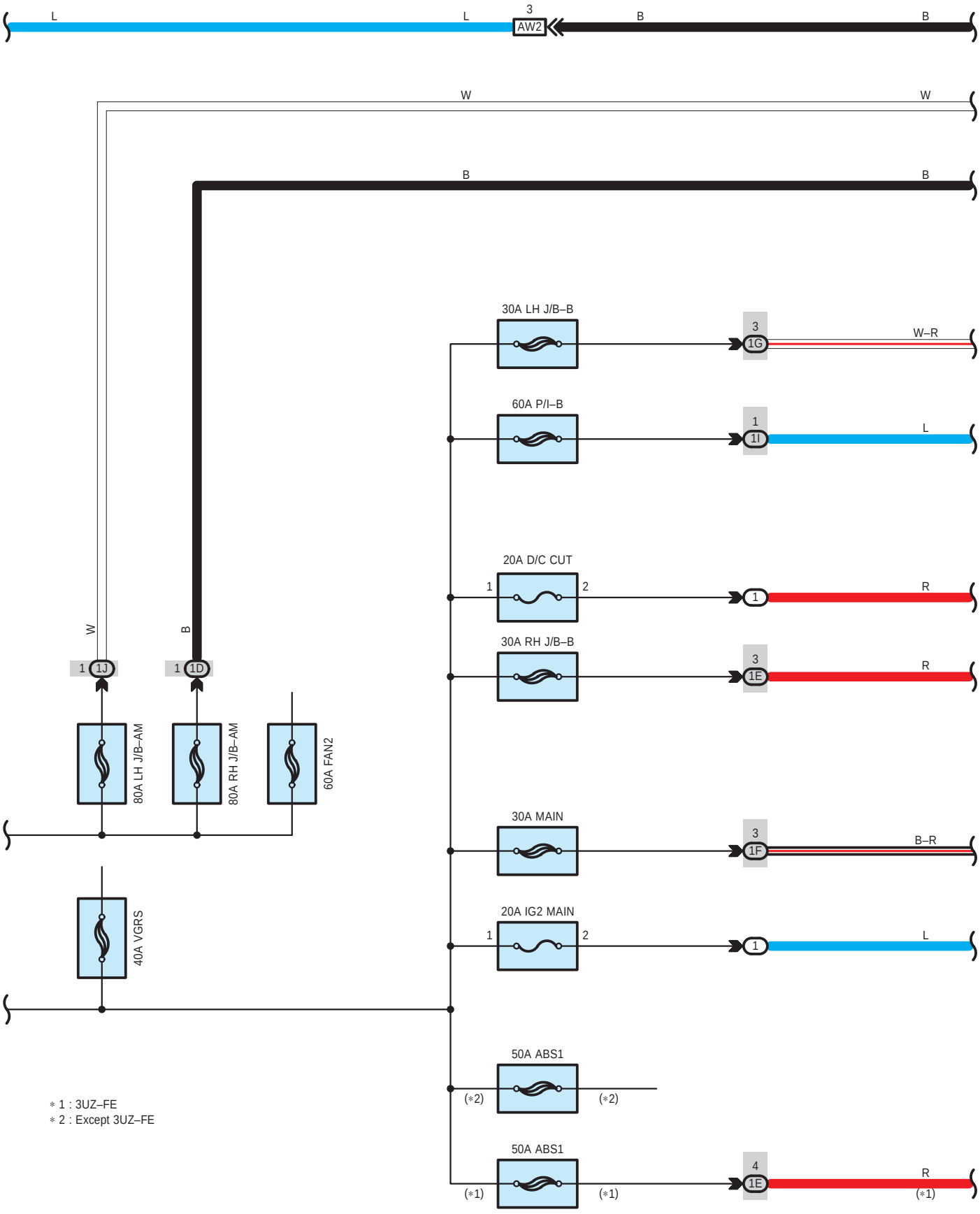

∗ 1 : 3UZ–FE
∗ 2 : Except 3UZ–FE

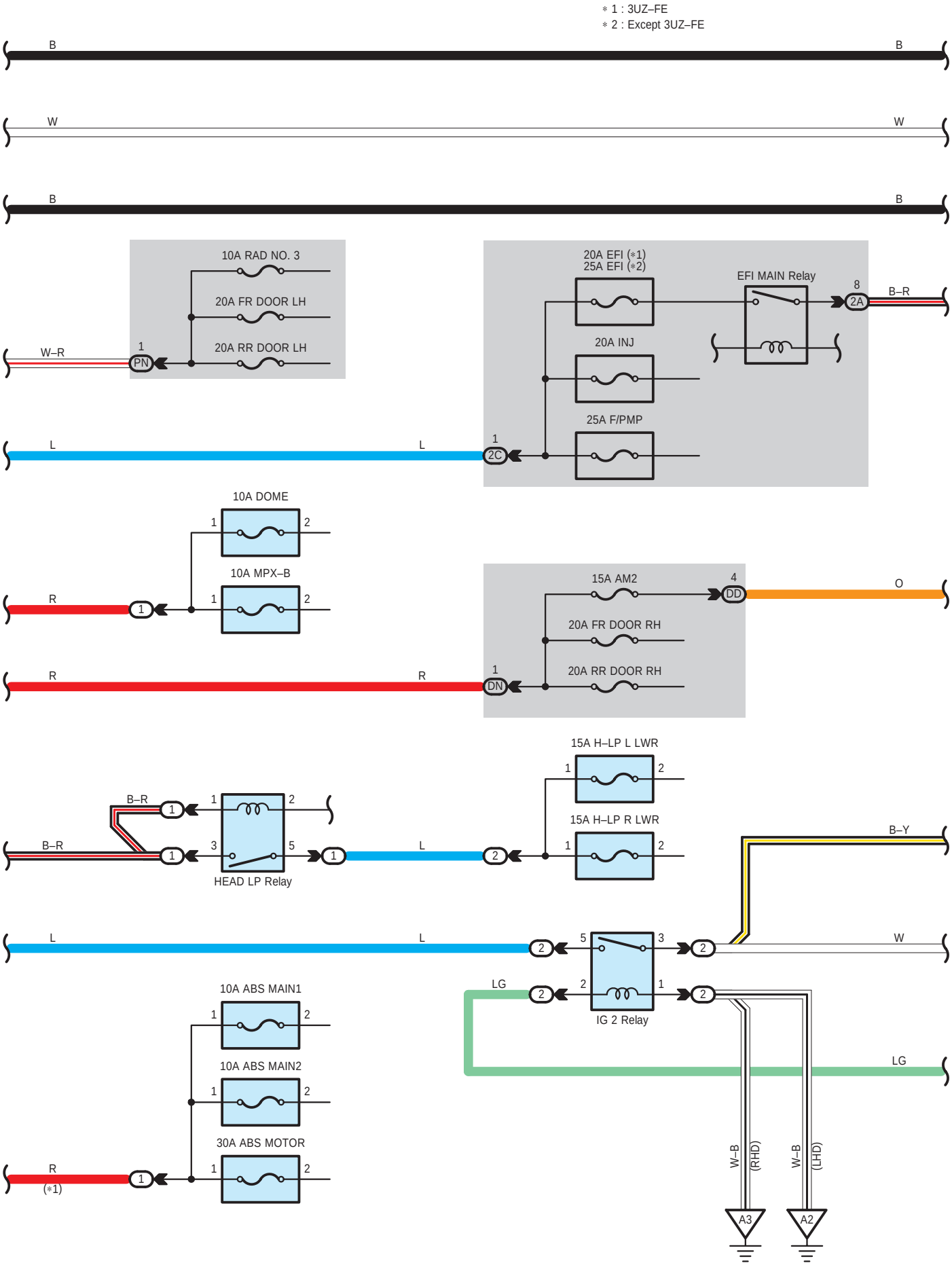
* 1 : 3UZ–FE
* 2 : Except 3UZ–FE
B
B
W
W
B
B
10A RAD NO. 3
20A FR DOOR LH
20A RR DOOR LH
W–R
1
PN
20A EFI (*1)
25A EFI (*2)
EFI MAIN Relay
8
2A
B–R
20A INJ
25A F/PMP
L
L
1
2C
10A DOME
1
2
10A MPX–B
1
2
R
1
15A AM2
4
DD
O
20A FR DOOR RH
20A RR DOOR RH
R
R
1
DN
15A H–LP L LWR
1
2
B–R
1
1
2
B–R
1
3
5
1
HEAD LP Relay
L
2
15A H–LP R LWR
1
2
B–Y
L
L
2
5
3
2
W
LG
2
2
1
2
IG 2 Relay
LG
10A ABS MAIN1
1
2
10A ABS MAIN2
1
2
30A ABS MOTOR
1
2
R
(*1)
1
W–B
(RHD)
W–B
(LHD)
A3
A2

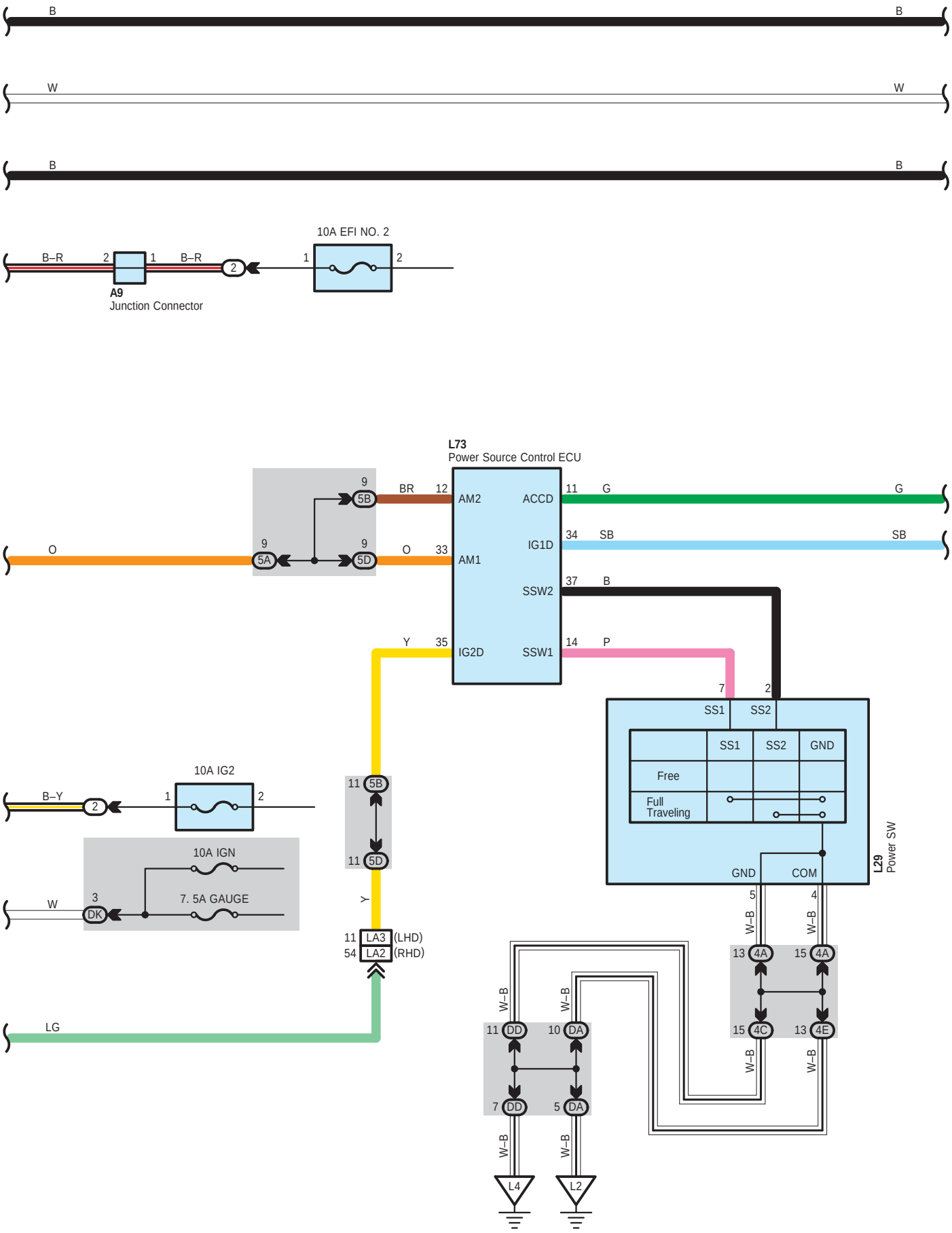
B
B
W
W
B
B
10A EFI NO. 2
B–R
2
1
B–R
2
1
2
A9
Junction Connector
L73
Power Source Control ECU
9
5B
BR
12
AM2
ACCD
11
G
G
O
9
5A
9
5D
O
33
AM1
IG1D
34
SB
SB
SSW2
37
B
Y
35
IG2D
SSW1
14
P
7
2
SS1
SS2
SS1
SS2
GND
Free
Full Traveling
GND
COM
L29
Power SW
10A IG2
B–Y
2
1
2
11
5B
11
5D
10A IGN
7. 5A GAUGE
W
3
DK
Y
11
LA3
(LHD)
54
LA2
(RHD)
LG
5
4
W–B
W–B
13
4A
15
4A
15
4C
13
4E
W–B
W–B
W–B
W–B
11
DD
10
DA
7
DD
5
DA
W–B
W–B
L4
L2

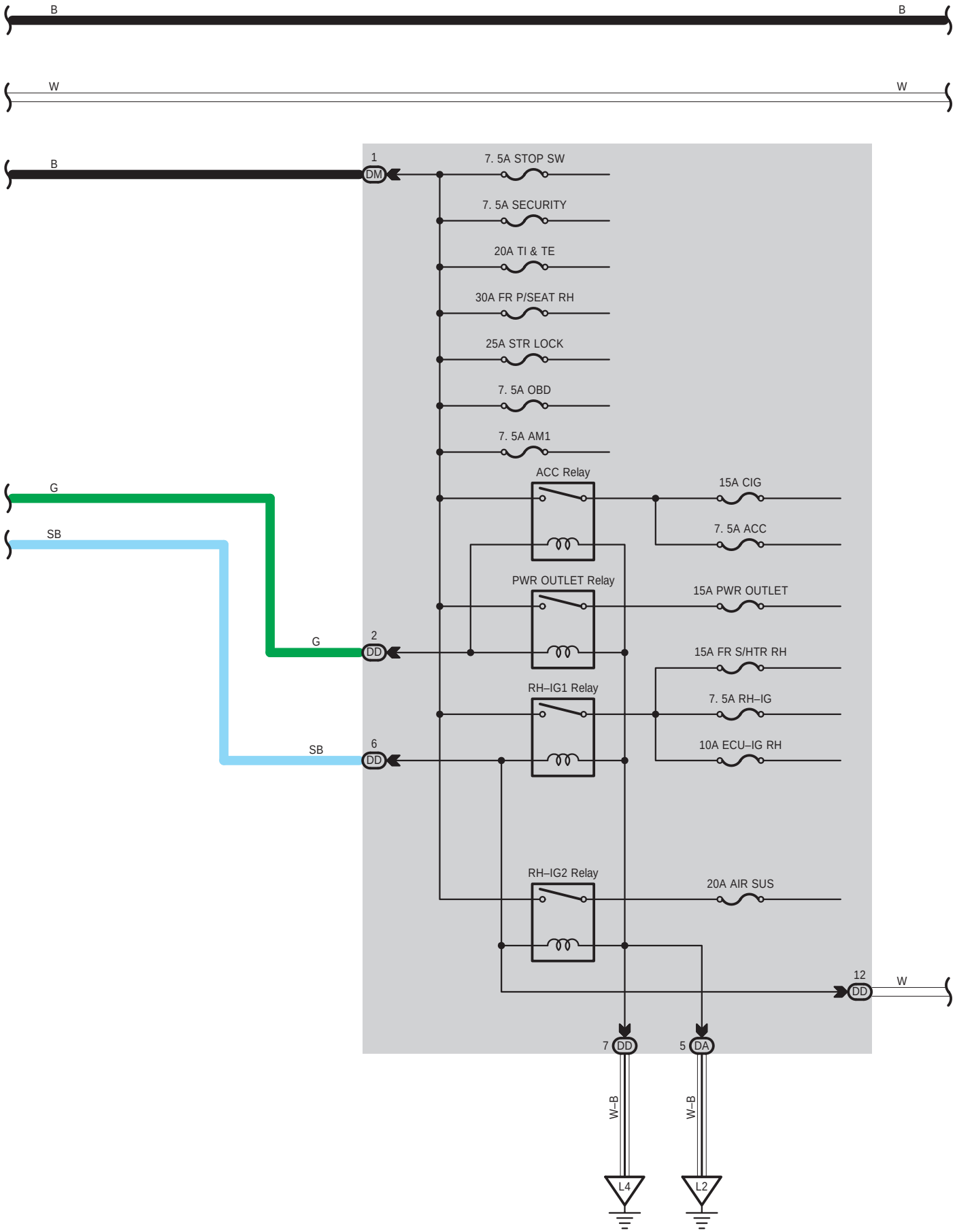
B
B
W
W
B
1
DM
7. 5A STOP SW
7. 5A SECURITY
20A TI & TE
30A FR P/SEAT RH
25A STR LOCK
7. 5A OBD
7. 5A AM1
ACC Relay
15A CIG
7. 5A ACC
G
SB
PWR OUTLET Relay
15A PWR OUTLET
G
2
DD
15A FR S/HTR RH
RH–IG1 Relay
7. 5A RH–IG
SB
6
DD
10A ECU–IG RH
RH–IG2 Relay
20A AIR SUS
12
DD
W
7
DD
5
DA
W–B
W–B
L4
L2

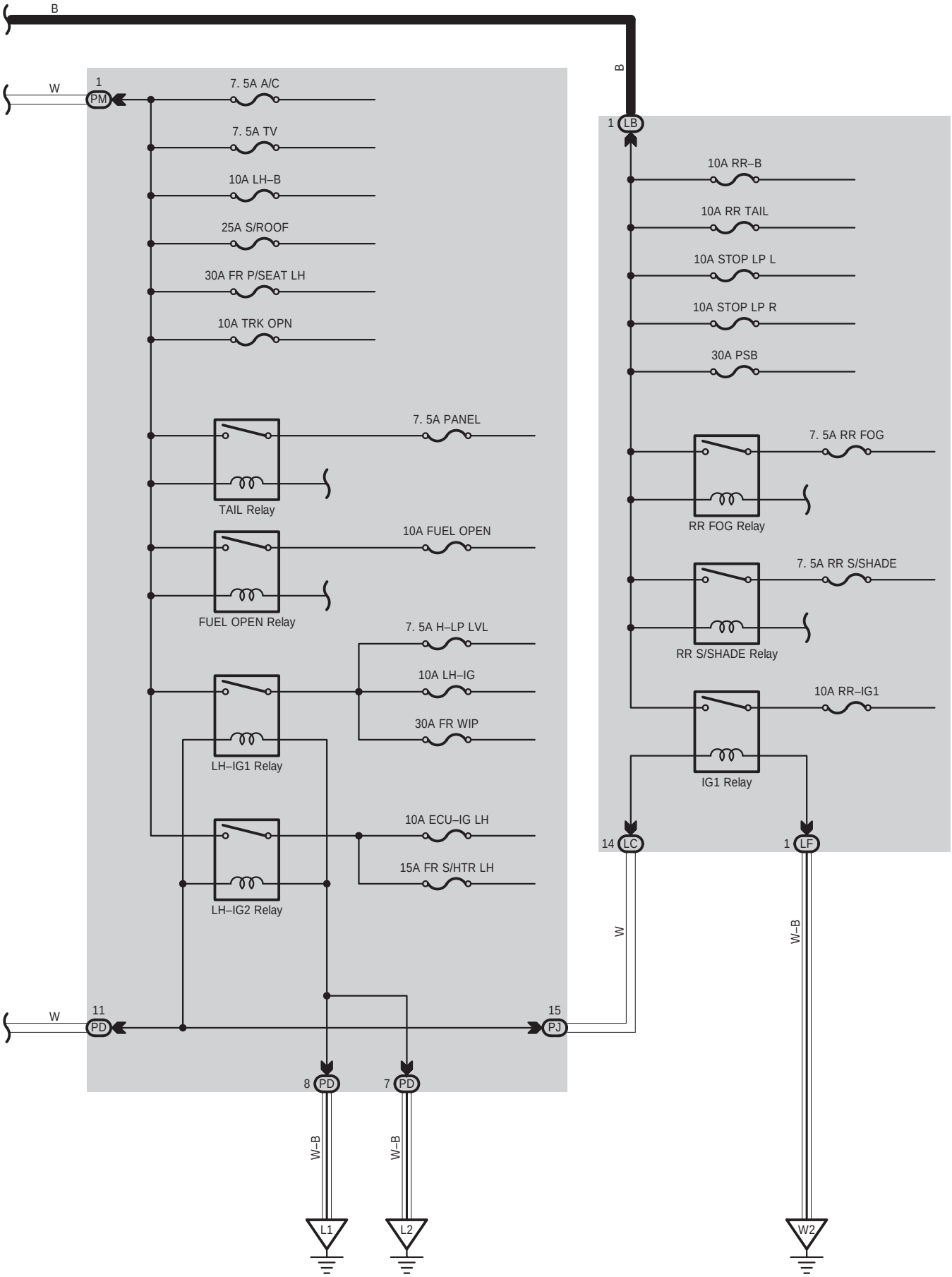
B
W
1
PM
7. 5A A/C
7. 5A TV
10A LH–B
25A S/ROOF
30A FR P/SEAT LH
10A TRK OPN
7. 5A PANEL
TAIL Relay
10A FUEL OPEN
FUEL OPEN Relay
7. 5A H–LP LVL
10A LH–IG
30A FR WIP
LH–IG1 Relay
10A ECU–IG LH
15A FR S/HTR LH
LH–IG2 Relay
W
11
PD
15
PJ
8
PD
7
PD
W–B
W–B
L1
L2
B
1
LB
10A RR–B
10A RR TAIL
10A STOP LP L
10A STOP LP R
30A PSB
7. 5A RR FOG
RR FOG Relay
7. 5A RR S/SHADE
RR S/SHADE Relay
10A RR–IG1
IG1 Relay
14
LC
1
LF
W
W–B
W2

A 9
White

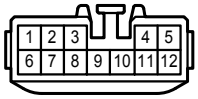

L 29
Black

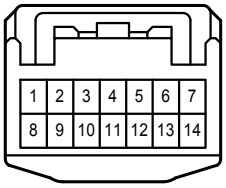

L 73
White

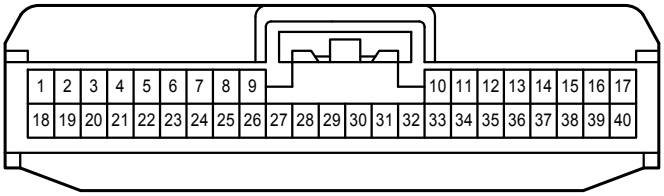

1A

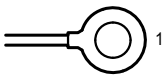

1B

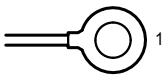

1C

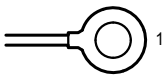

1D

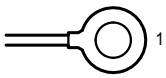

1E
White

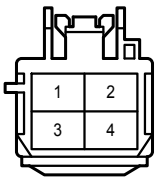

1F
White

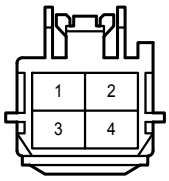

1G
White

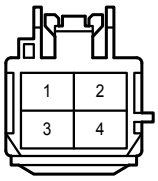

1H

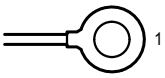

1I

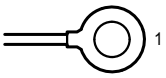

1J

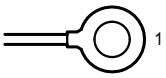

2A
White

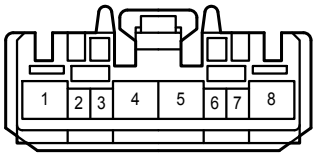

2C
White

2D
White

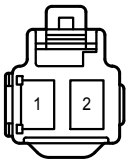

2E
Black

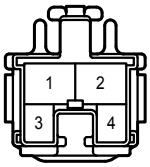

4A
White

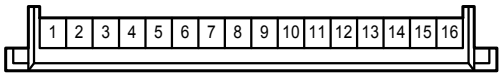

4C
White

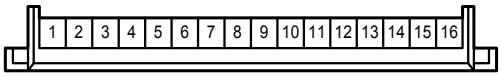

4E
White

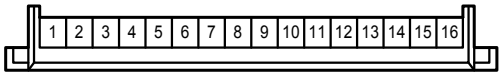

5A
White

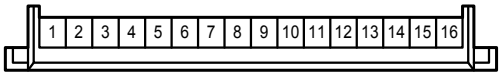

5B
White

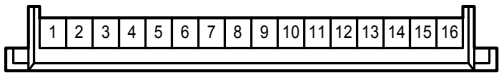

5D
White

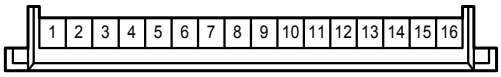

DA
White

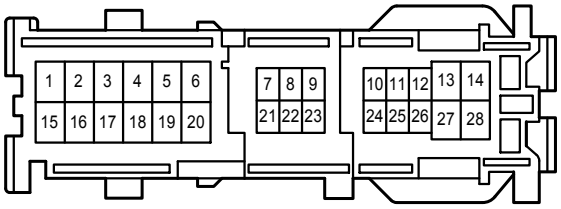

DD
White

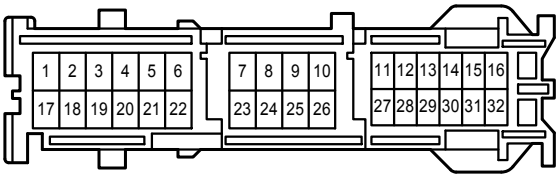

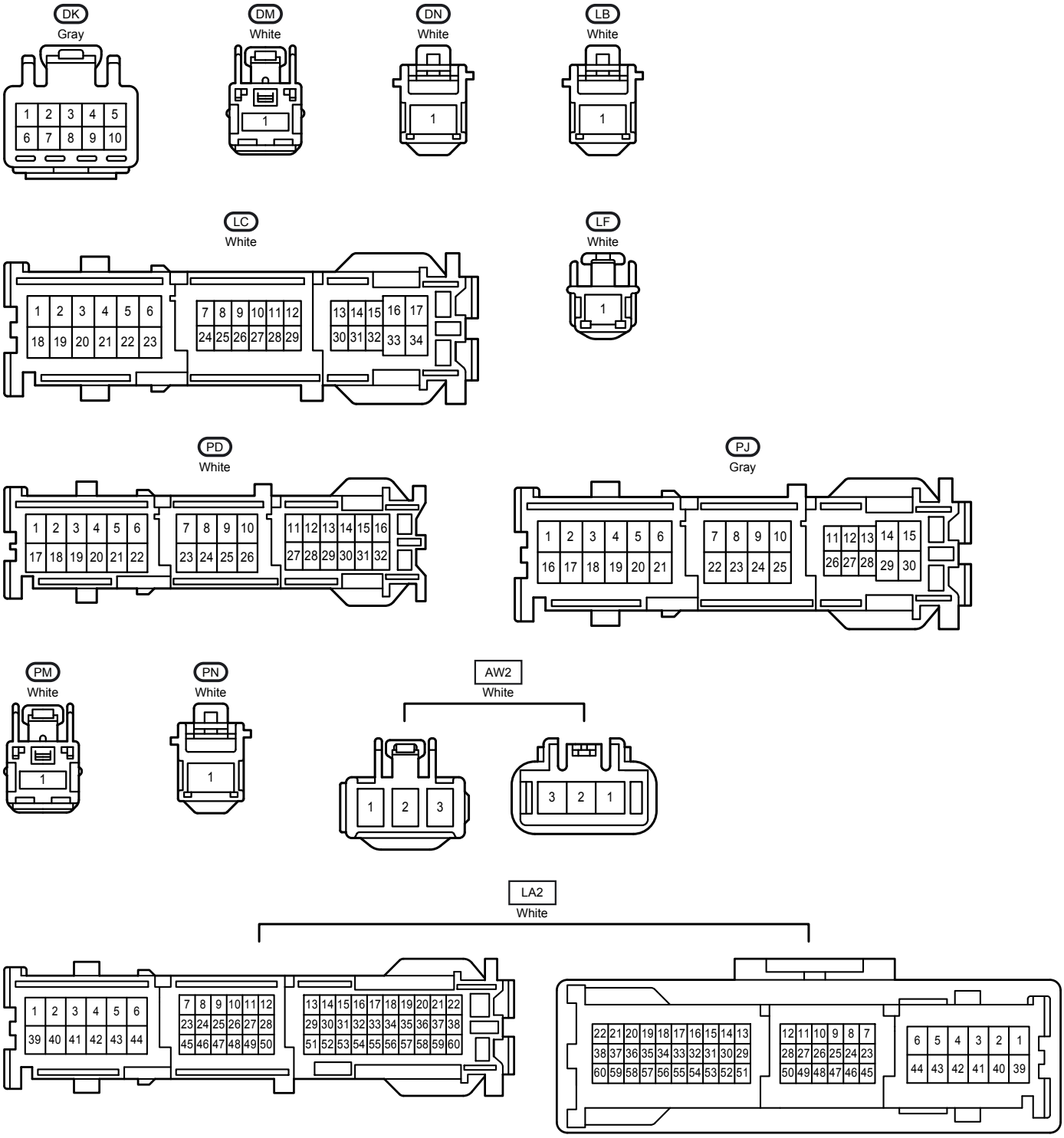
DK
Gray
DM
White
DN
White
LB
White
LC
White
LF
White
PD
White
PJ
Gray
PM
White
PN
White
AW2
White
LA2
White

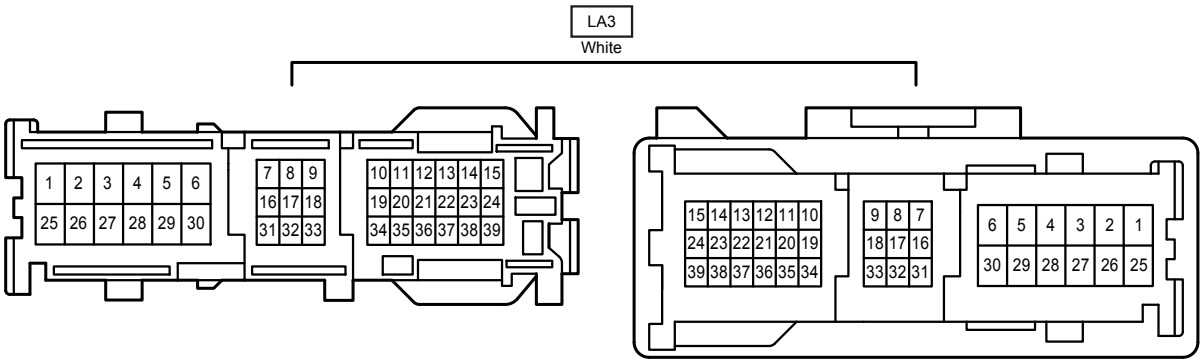
LA3
White
1 2 3 4 5 6
25 26 27 28 29 30
7 8 9
16 17 18
31 32 33
10 11 12 13 14 15
19 20 21 22 23 24
34 35 36 37 38 39
15 14 13 12 11 10
24 23 22 21 20 19
39 38 37 36 35 34
9 8 7
18 17 16
33 32 31
6 5 4 3 2 1
30 29 28 27 26 25