17 GS 460 / GS 430 / GS 350 / GS 300 (Before Jul. 2006 Production)

(Cont. next page)

Vehicle Dynamics Integrated Management

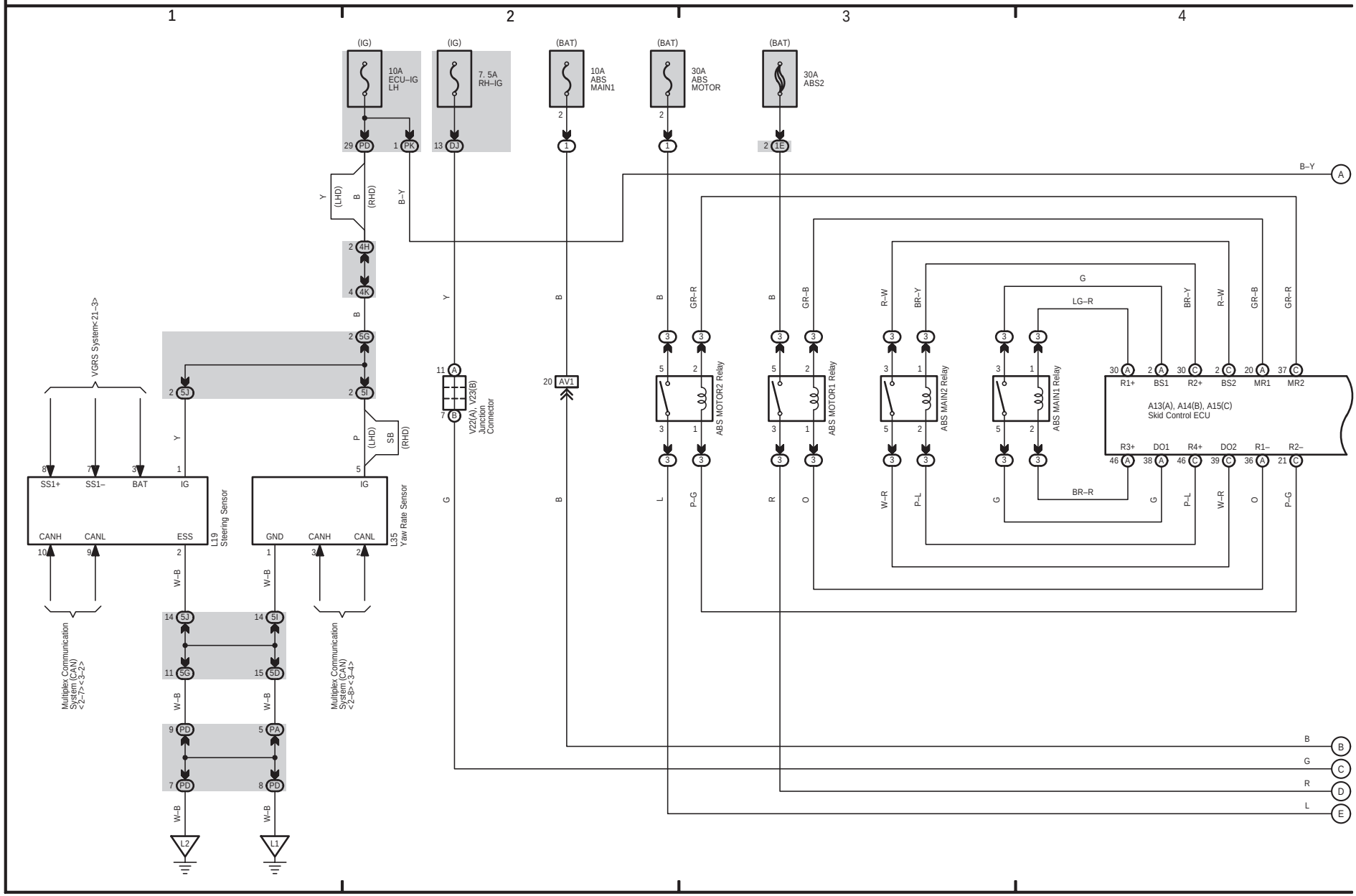

(Cont. next page)

Vehicle Dynamics Integrated Management

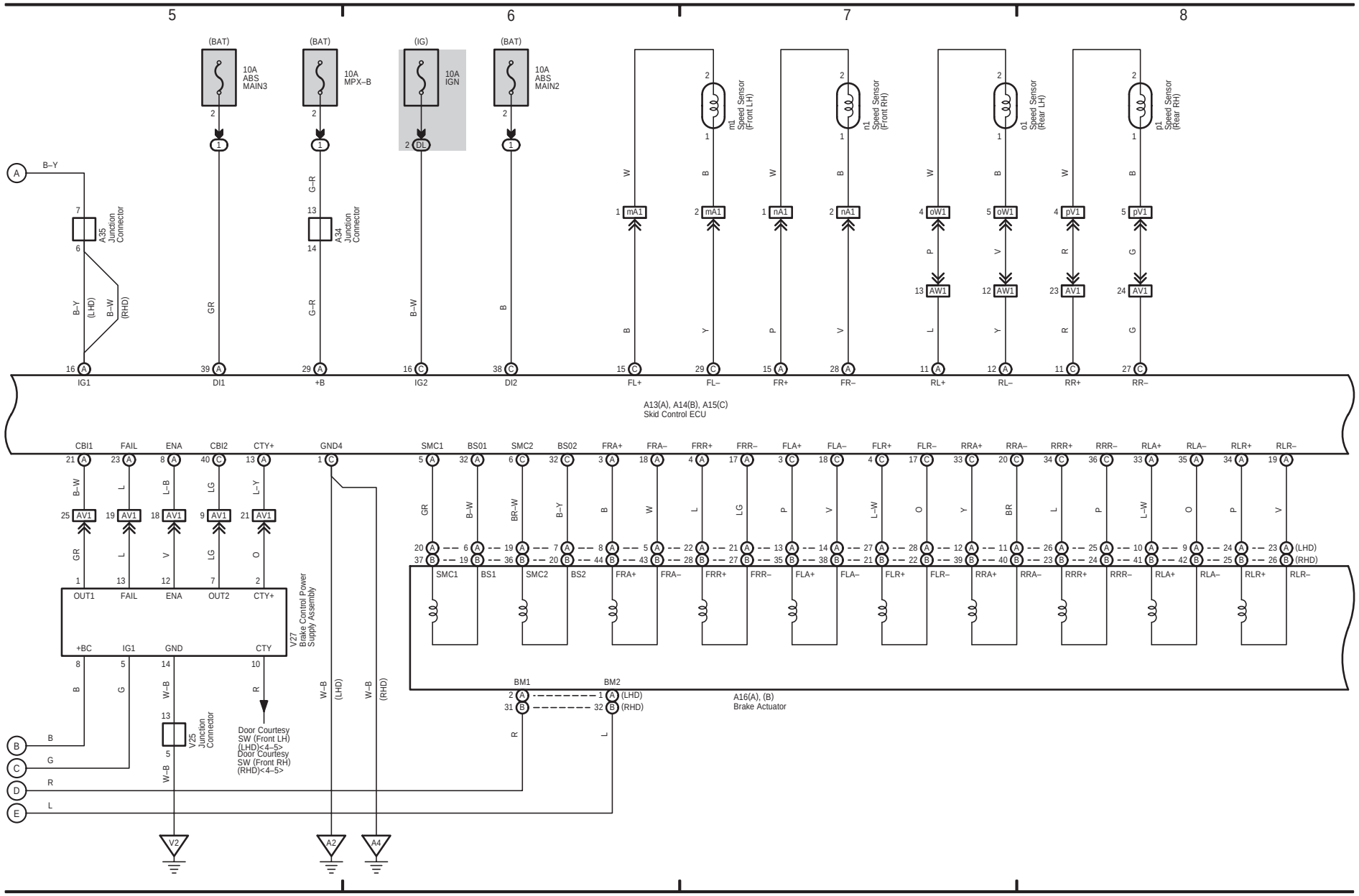

17 GS 460 / GS 430 / GS 350 / GS 300 (Before Jul. 2006 Production) (Cont' d)

(Cont. next page)

Vehicle Dynamics Integrated Management

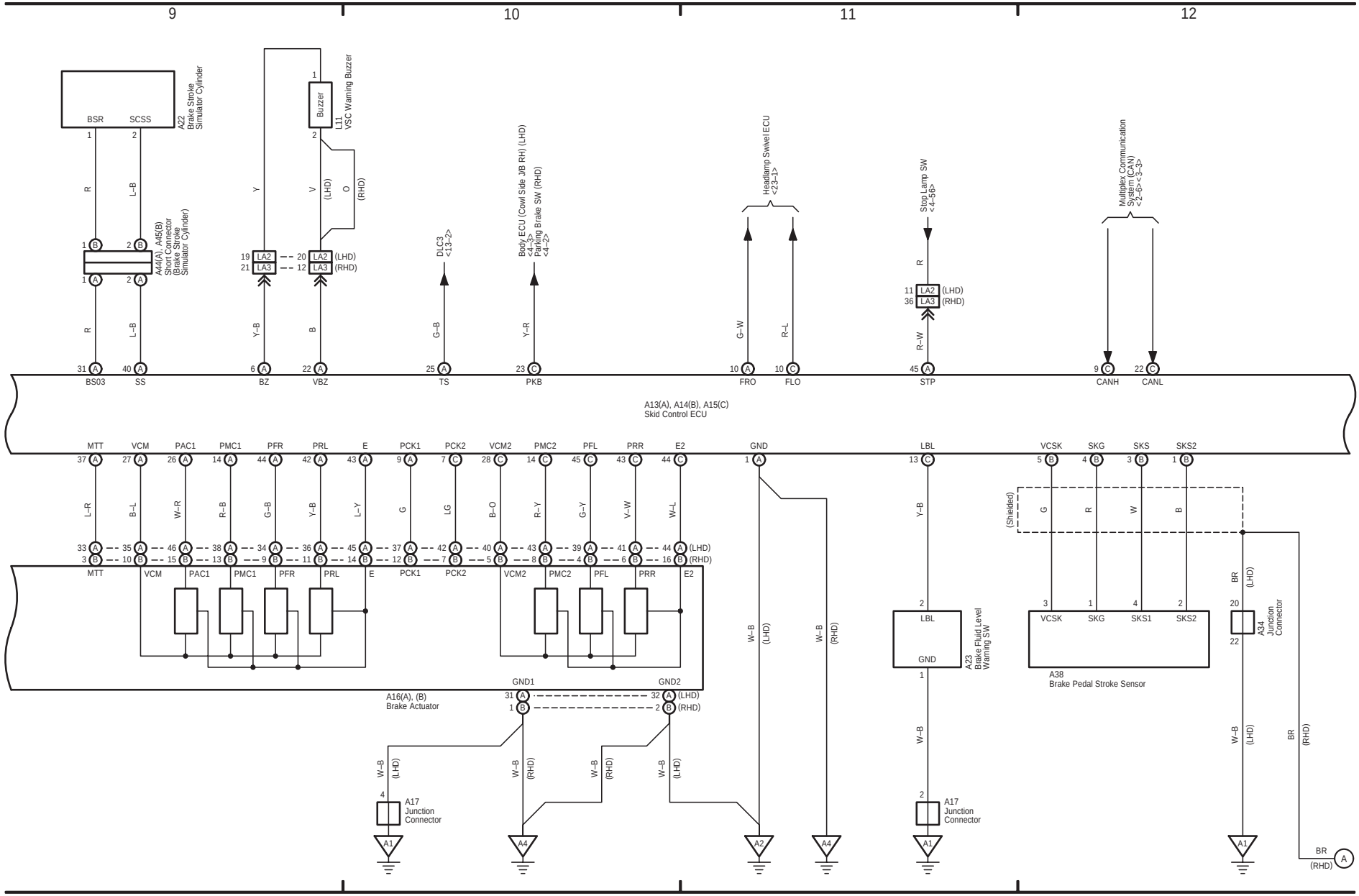

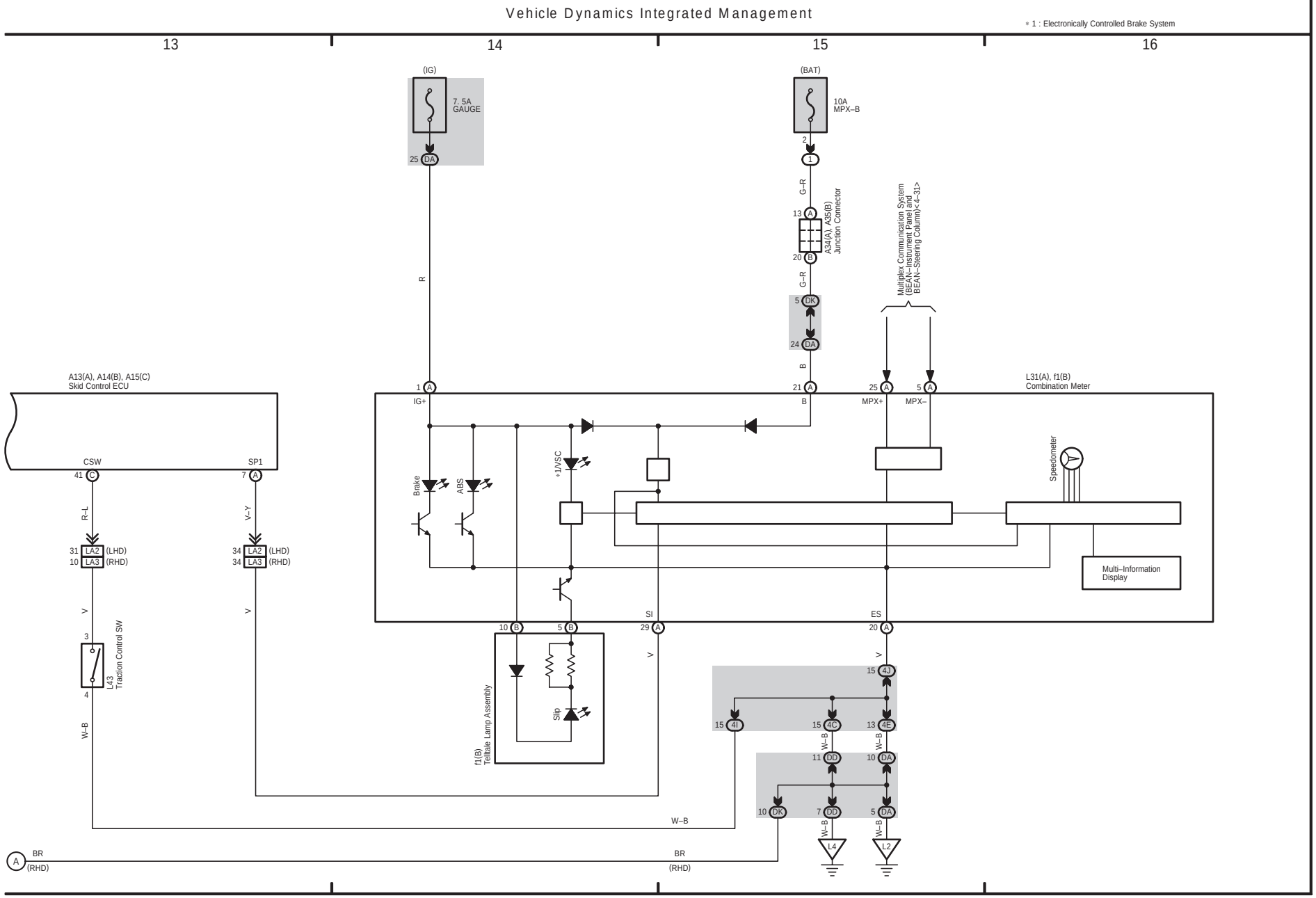
Vehicle Dynamics Integrated Management
* 1 : Electronically Controlled Brake System
13
14
15
16
(IG)
7. 5A
GAUGE
25 DA
(BAT)
10A
MPX–B
2
1
G–R
13 A
A34(A), A35(B)
Junction Connector
20 B
G–R
5 DK
24 DA
B
R
Multiplex Communication System
(BEAN–Instrument Panel and
BEAN–Steering Column)<4–31>
A13(A), A14(B), A15(C)
Skid Control ECU
1 A
IG+
21 A
B
25 A
MPX+
5 A
MPX–
L31(A), f1(B)
Combination Meter
CSW
41 C
SP1
7 A
R–L
V–Y
31 LA2 (LHD)
10 LA3 (RHD)
34 LA2 (LHD)
34 LA3 (RHD)
Brake
ABS
*1VSC
Speedometer
Multi–Information
Display
V
3
L43
Traction Control SW
4
W–B
V
10 B
5 B
SI
29 A
ES
20 A
V
15 4J
15 4I
15 4C
13 4E
W–B
W–B
11 DD
10 DA
10 DK
7 DD
5 DA
W–B
W–B
Slip
f1(B)
Telltale Lamp Assembly
W–B
L4
L2
A
BR
(RHD)
BR
(RHD)