## [Engine Compartment]

### (LHD)

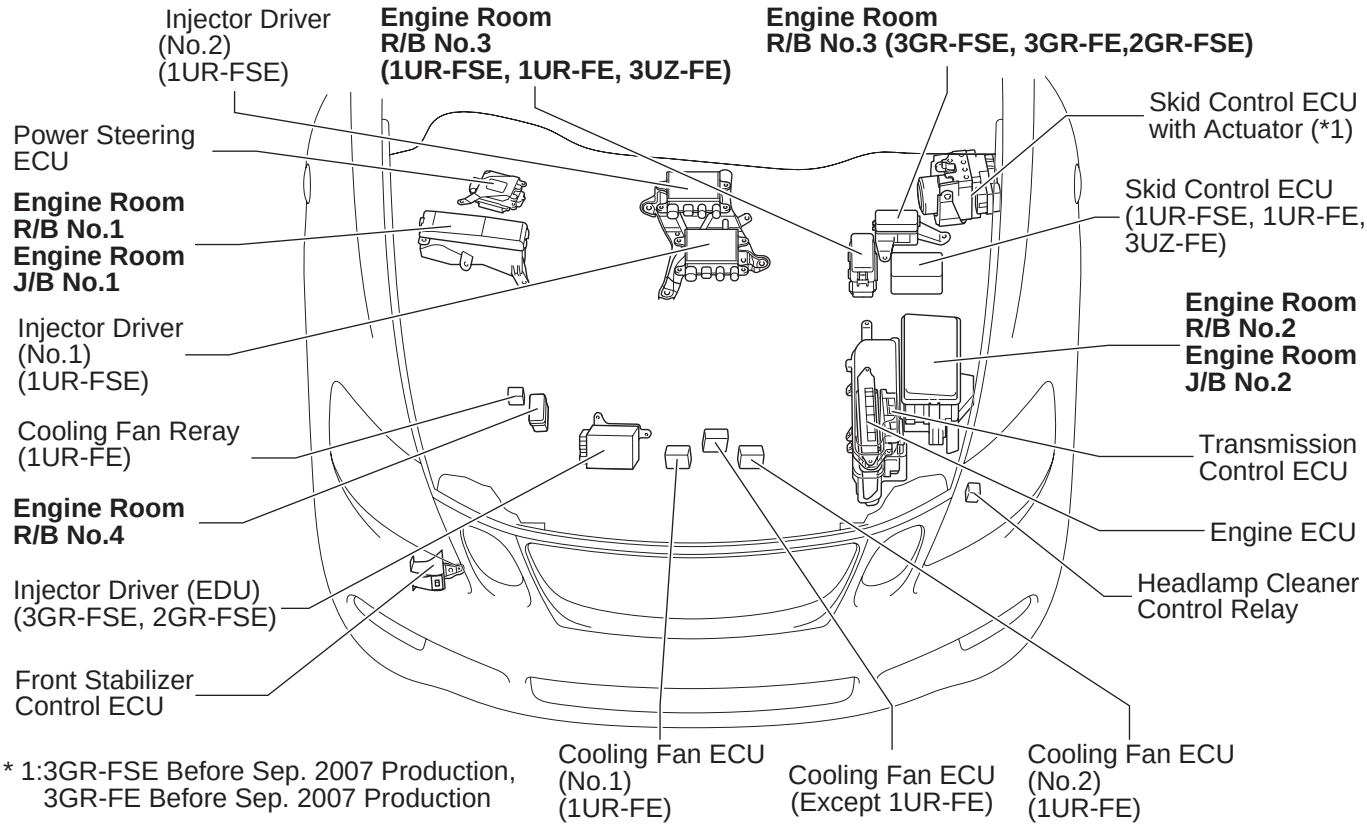


* 1:3GR-FSE Before Sep. 2007 Production,
3GR-FE Before Sep. 2007 Production

### (RHD)

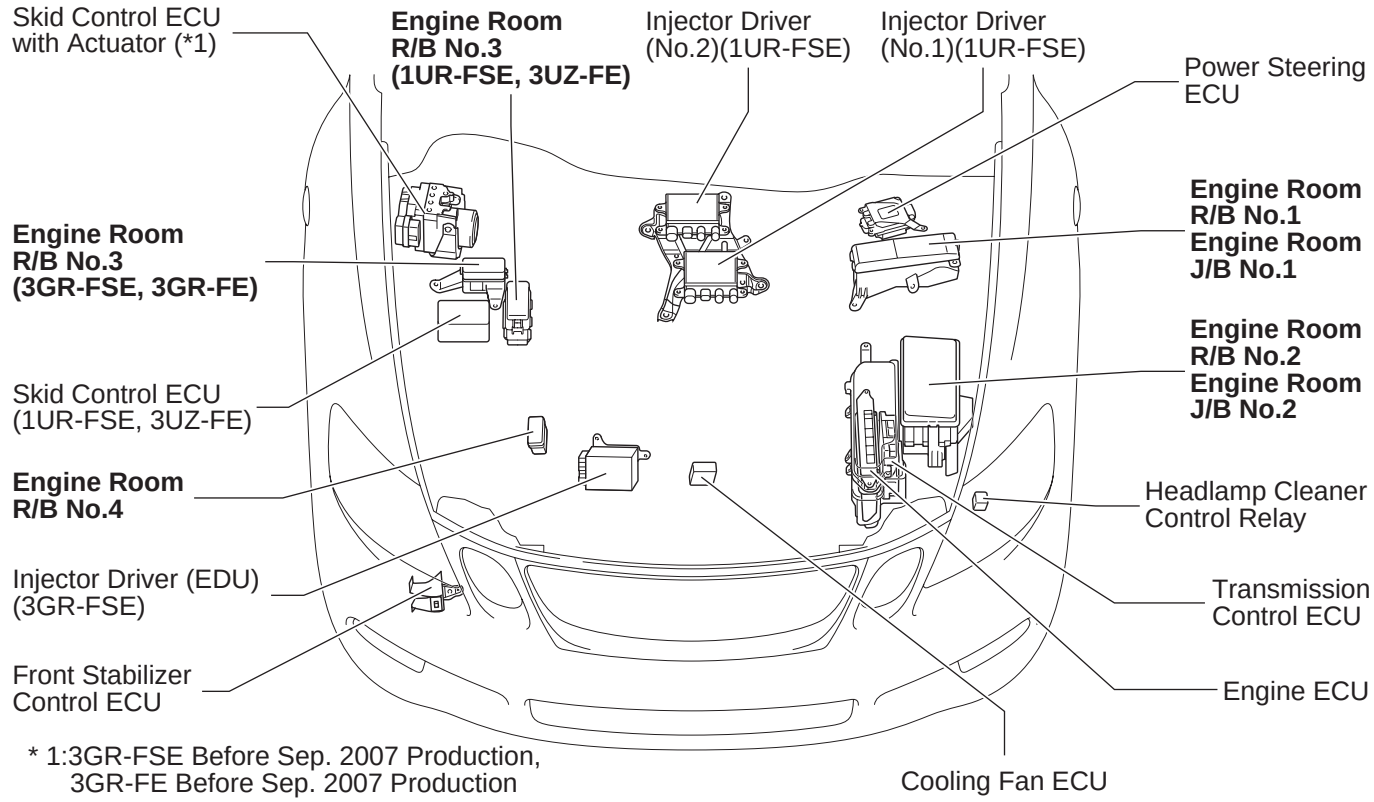


* 1:3GR-FSE Before Sep. 2007 Production,
3GR-FE Before Sep. 2007 Production