23 GS 430 / GS 300

(Cont. next page)

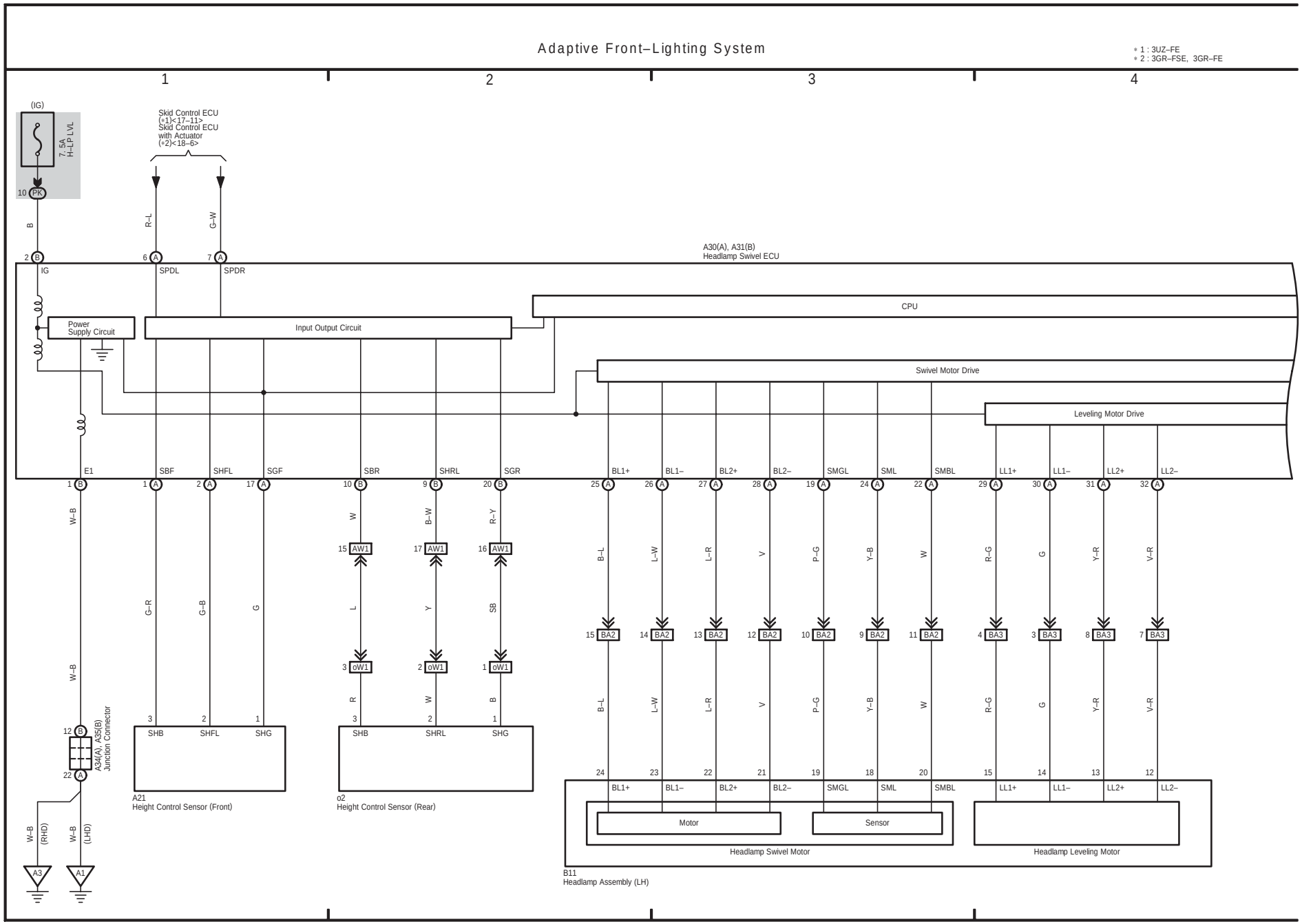

(Cont. next page)

Adaptive Front–Lighting System

* 1 : 3UZ–FE
* 2 : 3GR–FSE, 3GR–FE

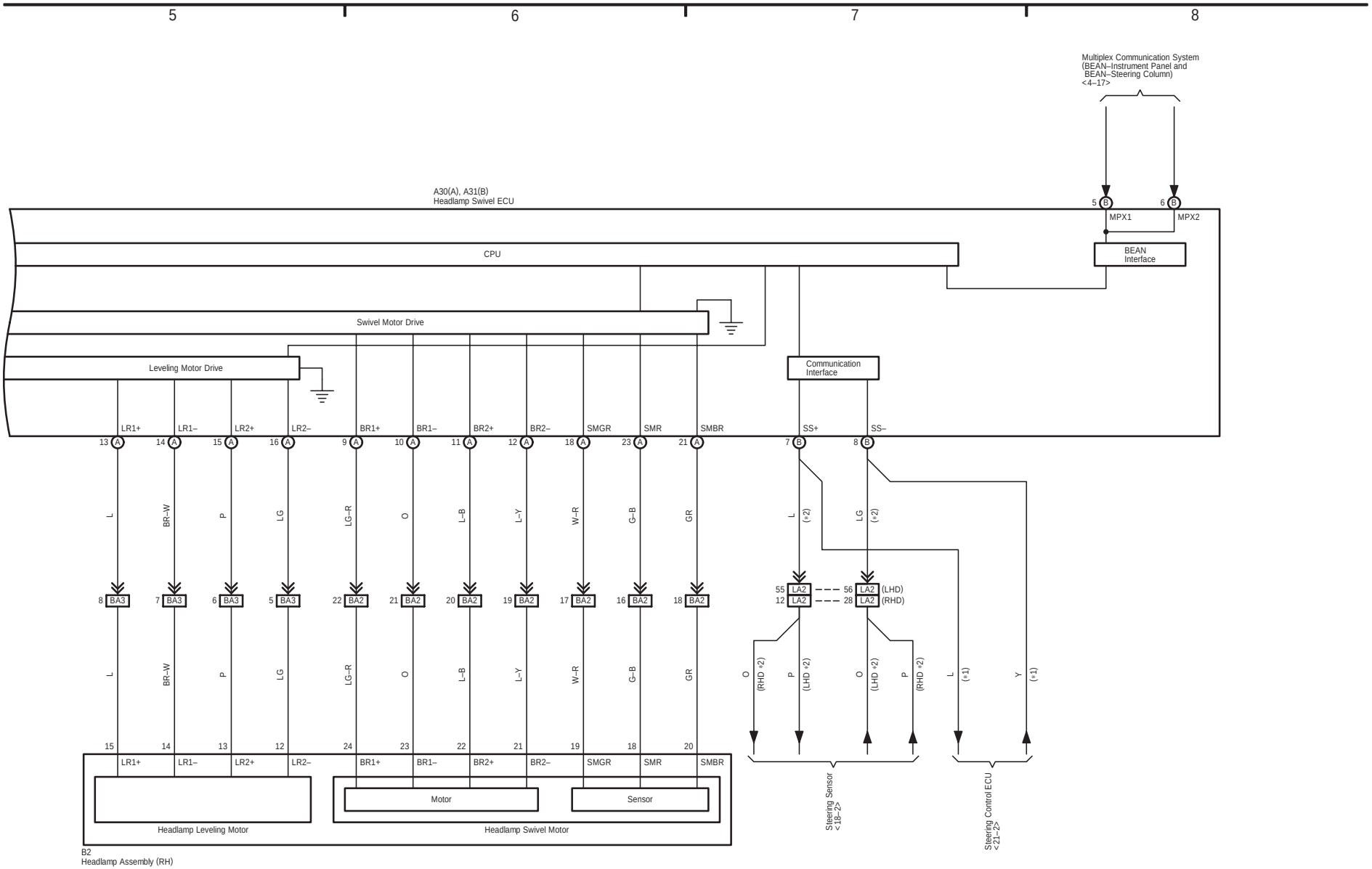

23 GS 430 / GS 300 (Cont' d)
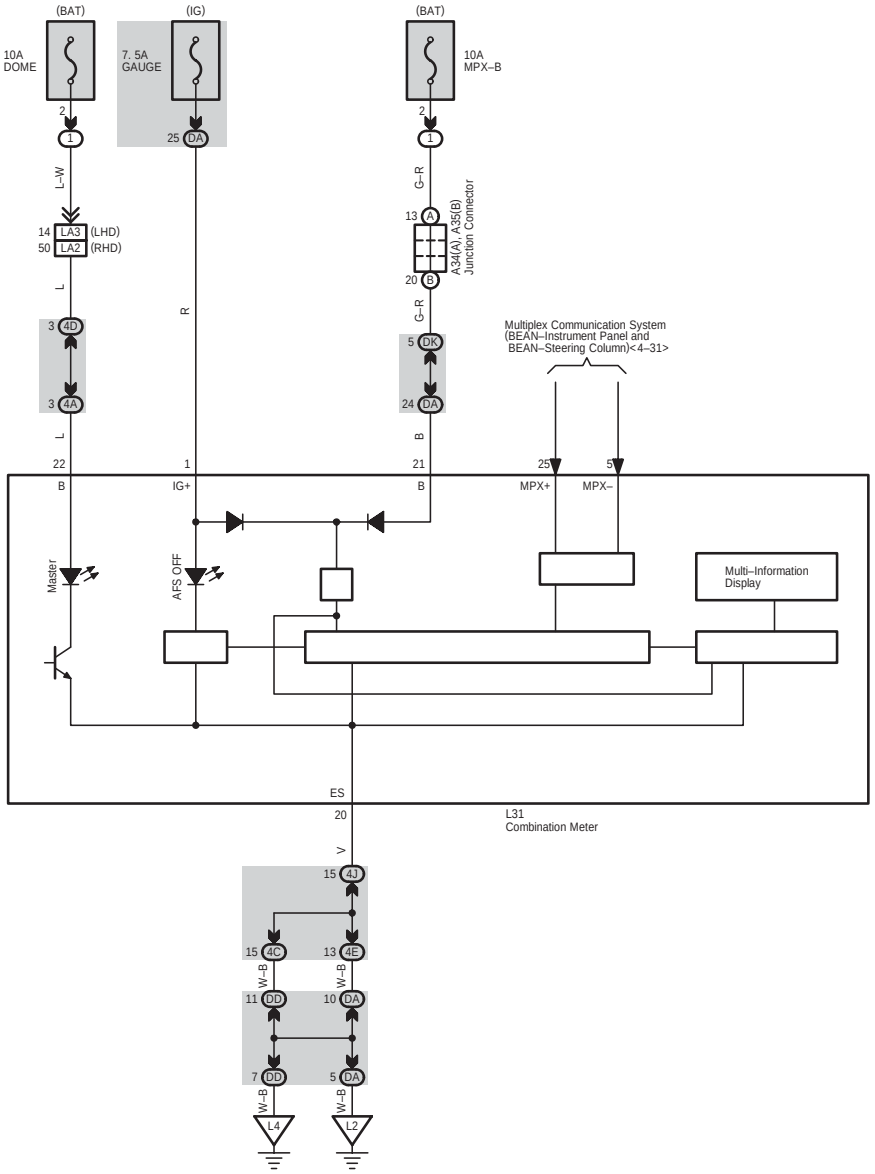
Adaptive Front–Lighting System