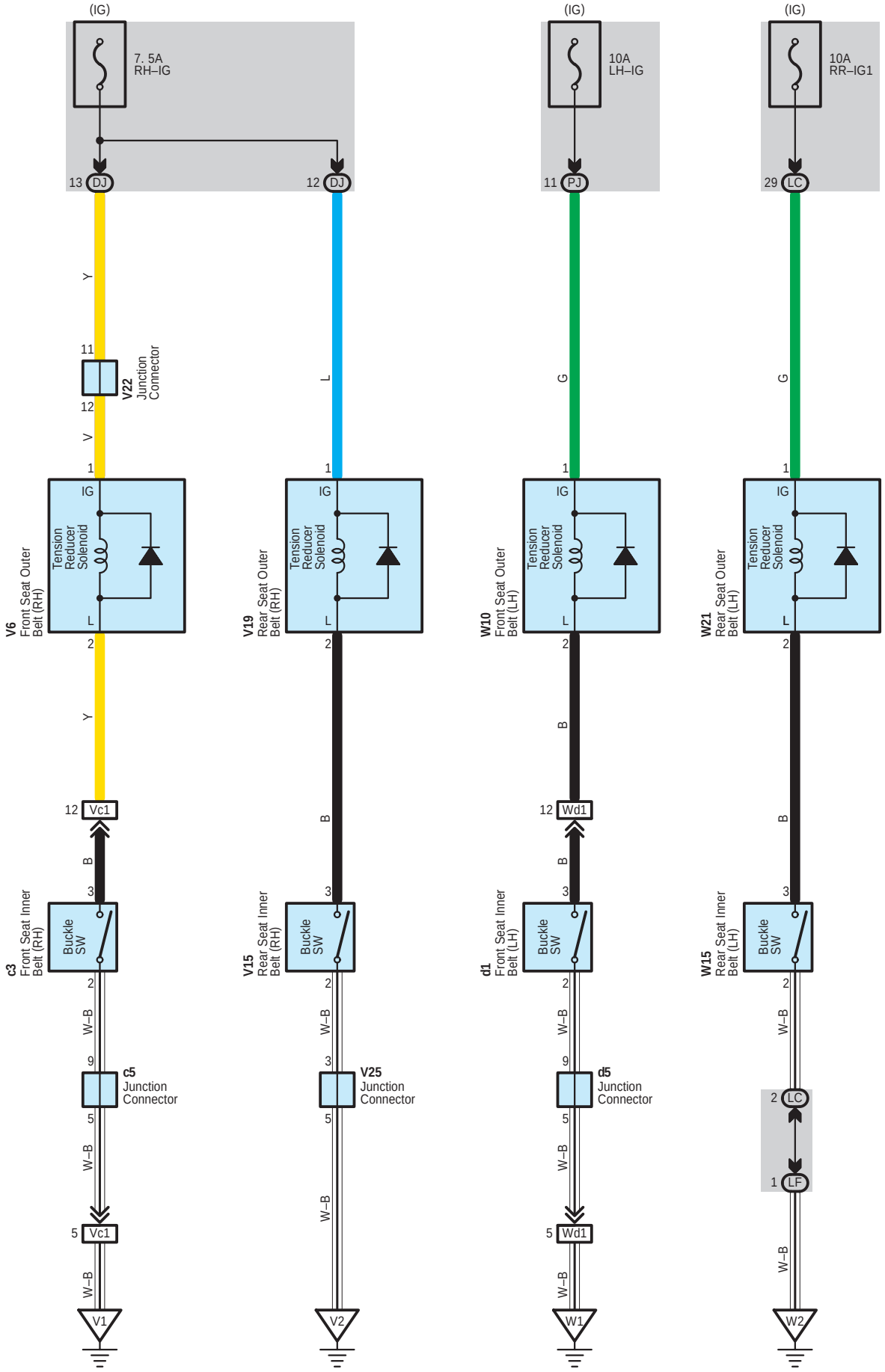
(IG)
7. 5A
RH–IG
13 DJ
12 DJ
Y
11
V22
Junction
Connector
12
V
1
IG
Tension
Reducer
Solenoid
L
V6
Front Seat Outer
Belt (RH)
2
Y
12 Vc1
B
3
c3
Front Seat Inner
Belt (RH)
Buckle
SW
2
W–B
9
c5
Junction
Connector
5
W–B
5 Vc1
W–B
V1
L
B
V19
Rear Seat Outer
Belt (RH)
V15
Rear Seat Inner
Belt (RH)
V25
Junction
Connector
V2
(IG)
10A
LH–IG
11 PJ
G
W10
Front Seat Outer
Belt (LH)
12 Wd1
d1
Front Seat Inner
Belt (LH)
d5
Junction
Connector
5 Wd1
W1
(IG)
10A
RR–IG1
29 LC
W21
Rear Seat Outer
Belt (LH)
W15
Rear Seat Inner
Belt (LH)
2 LC
1 LF
W2

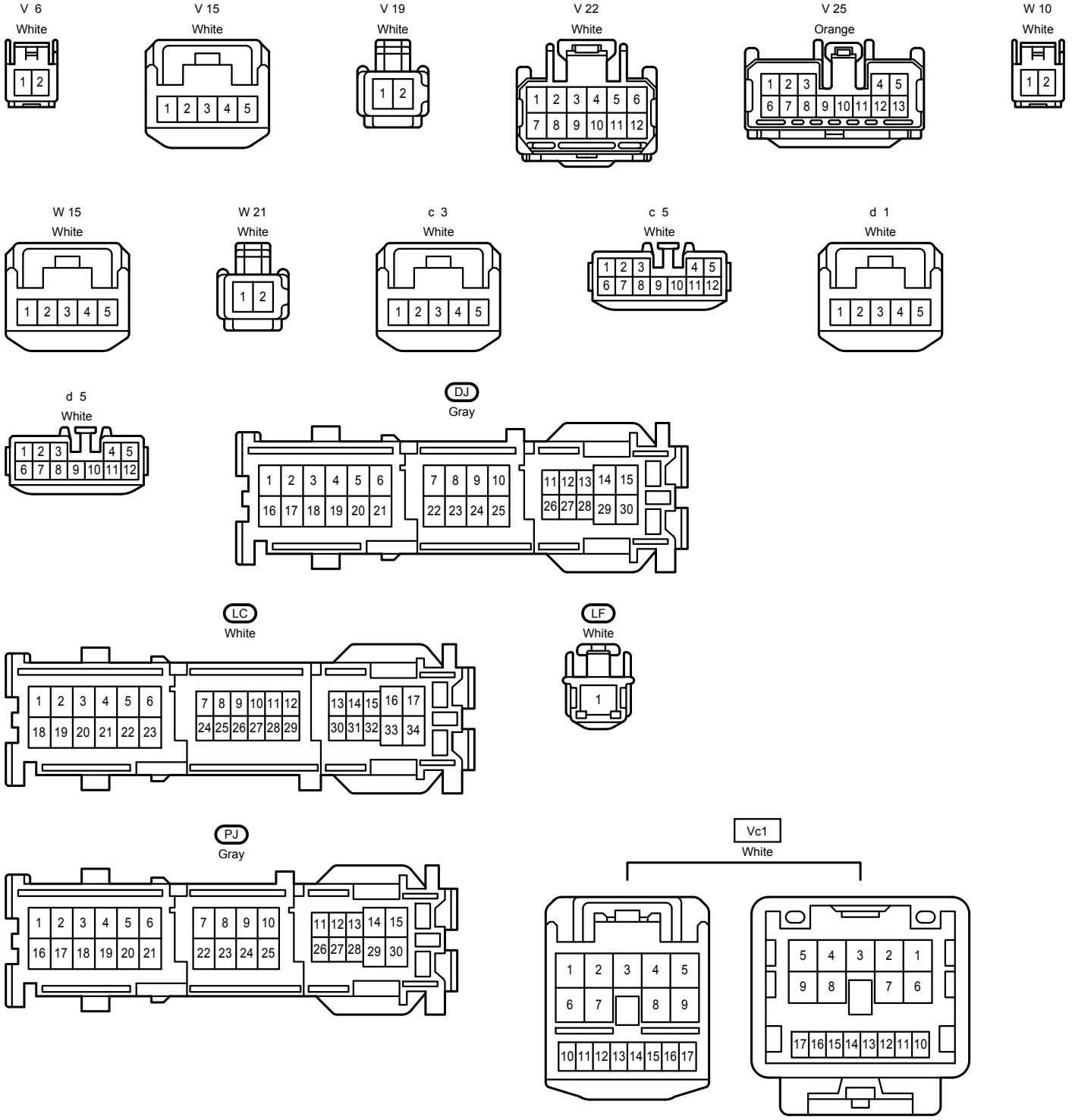
V 6
White
V 15
White
V 19
White
V 22
White
V 25
Orange
W 10
White
W 15
White
W 21
White
c 3
White
c 5
White
d 1
White
d 5
White
DJ
Gray
LC
White
LF
White
PJ
Gray
Vc1
White

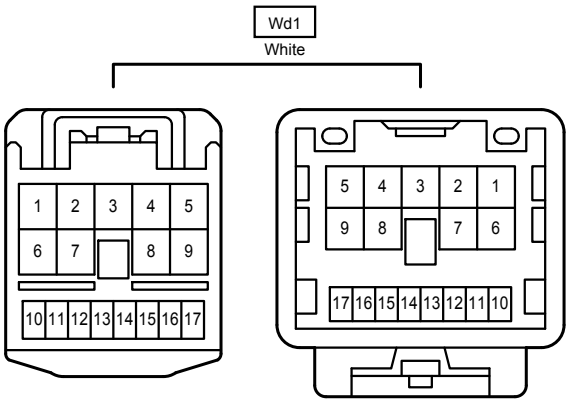
Wd1
White
1 2 3 4 5
6 7 8 9
10 11 12 13 14 15 16 17
5 4 3 2 1
9 8 7 6
17 16 15 14 13 12 11 10