2005 GX 470
ELECTRICAL WIRING DIAGRAM

	Section Code	Page
INTRODUCTION	A	2
HOW TO USE THIS MANUAL	B	3
TROUBLESHOOTING	C	12
ABBREVIATIONS	D	17
GLOSSARY OF TERMS AND SYMBOLS	E	18
RELAY LOCATIONS	F	20
ELECTRICAL WIRING ROUTING	G	36
SYSTEM CIRCUITS	H	NO TAG
GROUND POINT	I	392
POWER SOURCE (Current Flow Chart)	J	402
CONNECTOR LIST	K	412
PART NUMBER OF CONNECTORS	L	428
OVERALL ELECTRICAL WIRING DIAGRAM	M	434

FOREWORD

This wiring diagram manual has been prepared to provide information on the electrical system of the 2005 GX 470.

Applicable models: UZJ120 Series

For service specifications and repair procedures of the above models other than those listed in this manual, refer to the following manuals;

Manual Name	Pub. No.
● 2005 LEXUS GX 470 Repair Manual	RM1164U
● 2005 LEXUS New Car Features	NCF273U

All information in this manual is based on the latest product information at the time of publication. However, specifications and procedures are subject to change without notice.

TOYOTA MOTOR CORPORATION

NOTICE

When handling supplemental restraint system components (removal, installation or inspection, etc.), always follow the direction given in the repair manuals listed above to prevent accidents and supplemental restraint system malfunction.

©2004 TOYOTA MOTOR CORPORATION
All rights reserved. This book may not be reproduced or copied, in whole or in part, without the written permission of Toyota Motor Corporation.
First Printing : Oct. 27, 2004 01–041027–00

A INTRODUCTION

This manual consists of the following 13 sections:

No.	Section	Description
A	INDEX	Index of the contents of this manual.
	INTRODUCTION	Brief explanation of each section.
B	HOW TO USE THIS MANUAL	Instructions on how to use this manual.
C	TROUBLE–SHOOTING	Describes the basic inspection procedures for electrical circuits.
D	ABBREVIATIONS	Defines the abbreviations used in this manual.
E	GLOSSARY OF TERMS AND SYMBOLS	Defines the symbols and functions of major parts.
F	RELAY LOCATIONS	Shows position of the Electronic Control Unit, Relays, Relay Block, etc. This section is closely related to the system circuit.
G	ELECTRICAL WIRING ROUTING	Describes position of Parts Connectors, Splice points, Ground points, etc. This section is closely related to the system circuit.
H	INDEX	Index of the system circuits.
	SYSTEM CIRCUITS	Electrical circuits of each system are shown from the power supply through ground points. Wiring connections and their positions are shown and classified by code according to the connection method. (Refer to the section, ”How to use this manual”). The ”System Outline” and ”Service Hints” useful for troubleshooting are also contained in this section.
I	GROUND POINT	Shows ground positions of all parts described in this manual.
J	POWER SOURCE (Current Flow Chart)	Describes power distribution from the power supply to various electrical loads.
K	CONNECTOR LIST	Describes the form of the connectors for the parts appeared in this book. This section is closely related to the system circuit.
L	PART NUMBER OF CONNECTORS	Indicates the part number of the connectors used in this manual.
M	OVERALL ELECTRICAL WIRING DIAGRAM	Provides circuit diagrams showing the circuit connections.

This manual provides information on the electrical circuits installed on vehicles by dividing them into a circuit for each system.

The actual wiring of each system circuit is shown from the point where the power source is received from the battery as far as each ground point. (All circuit diagrams are shown with the switches in the OFF position.)

When troubleshooting any problem, first understand the operation of the circuit where the problem was detected (see System Circuit section), the power source supplying power to that circuit (see Power Source section), and the ground points (see Ground Point section). See the System Outline to understand the circuit operation.

When the circuit operation is understood, begin troubleshooting of the problem circuit to isolate the cause. Use Relay Location and Electrical Wiring Routing sections to find each part, junction block and wiring harness connectors, wiring harness and wiring harness connectors, splice points, and ground points of each system circuit. Internal wiring for each junction block is also provided for better understanding of connection within a junction block.
Wiring related to each system is indicated in each system circuit by arrows (from__, to__). When overall connections are required, see the Overall Electrical Wiring Diagram at the end of this manual.

[A]

Stop Light

∗ The system shown here is an EXAMPLE ONLY. It is different to the actual circuit shown in the SYSTEM CIRCUITS SECTION.

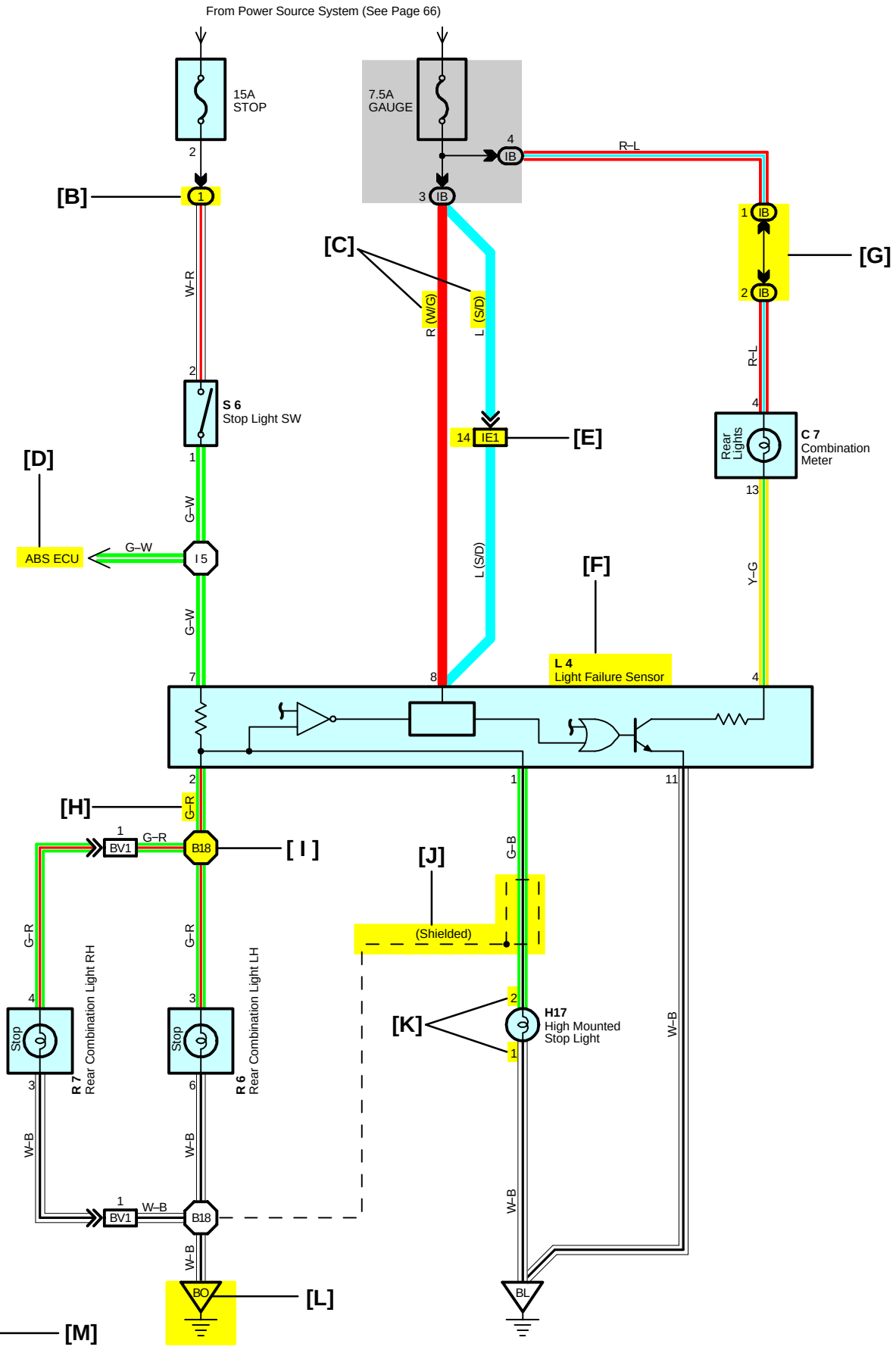

[A] : System Title

[B] : Indicates a Relay Block. No shading is used and only the Relay Block No. is shown to distinguish it from the J/B

Example: (1) Indicates Relay Block No.1

[C] : ( ) is used to indicate different wiring and connector, etc. when the vehicle model, engine type, or specification is different.

[D] : Indicates related system.

[E] : Indicates the wiring harness and wiring harness connector. The wiring harness with male terminal is shown with arrows (⩔).
Outside numerals are pin numbers.

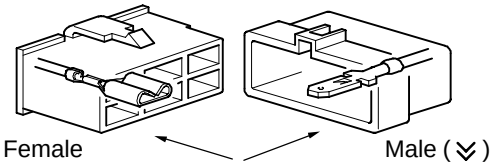

The first letter of the code for each wiring harness and wiring harness connector(s) indicates the component's location, e.g, "E" for the Engine Compartment, "I" for the Instrument Panel and Surrounding area, and "B" for the Body and Surrounding area.

When more than one code has the first and second letters in common, followed by numbers (e.g, IH1, IH2), this indicates the same type of wiring harness and wiring harness connector.

[F] : Represents a part (all parts are shown in sky blue). The code is the same as the code used in parts position.

[G] : Junction Block (The number in the circle is the J/B No. and the connector code is shown beside it). Junction Blocks are shaded to clearly separate them from other parts.

Example:

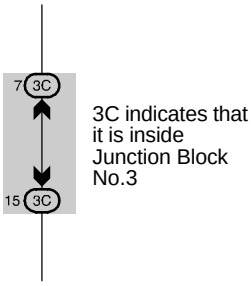

[H] : Indicates the wiring color.

Wire colors are indicated by an alphabetical code.

B = Black	W = White	BR = Brown
L = Blue	V = Violet	SB = Sky Blue
R = Red	G = Green	LG = Light Green
P = Pink	Y = Yellow	GR = Gray
O = Orange		

The first letter indicates the basic wire color and the second letter indicates the color of the stripe.

Example: L – Y

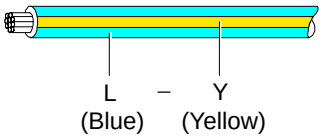

[I] : Indicates a wiring Splice Point (Codes are "E" for the Engine Room, "I" for the Instrument Panel, and "B" for the Body).

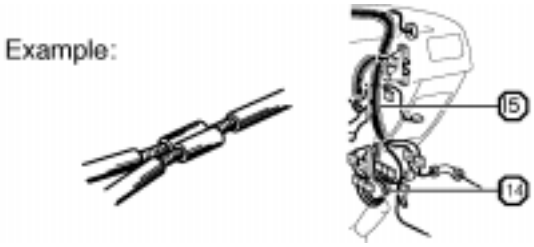

The Location of splice Point I 5 is indicated by the shaded section.

[J] : Indicates a shielded cable.

[K] : Indicates the pin number of the connector.
The numbering system is different for female and male connectors.

Example: Numbered in order from upper left to lower right — Numbered in order from upper right to lower left

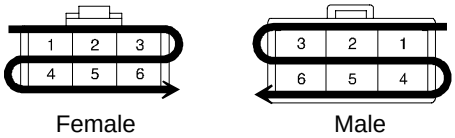

[L] : Indicates a ground point.

The first letter of the code for each ground point(s) indicates the component's location, e.g, "E" for the Engine Compartment, "I" for the Instrument Panel and Surrounding area, and "B" for the Body and Surrounding area.

[M] : Page No.

[N] **System Outline**

Current is applied at all times through the STOP fuse to TERMINAL 2 of the stop light SW.
When the ignition SW is turned on, current flows from the GAUGE fuse to TERMINAL 8 of the light failure sensor, and also flows through the rear lights warning light to TERMINAL 4 of the light failure sensor.

Stop Light Disconnection Warning

When the ignition SW is turned on and the brake pedal is pressed (Stop light SW on), if the stop light circuit is open, the current flowing from TERMINAL 7 of the light failure sensor to TERMINALS 1, 2 changes, so the light failure sensor detects the disconnection and the warning circuit of the light failure sensor is activated.
As a result, the current flows from TERMINAL 4 of the light failure sensor to TERMINAL 11 to GROUND and turns the rear lights warning light on. By pressing the brake pedal, the current flowing to TERMINAL 8 of the light failure sensor keeps the warning circuit on and holds the warning light on until the ignition SW is turned off.

[O] **Service Hints**

S6 Stop Light SW

2–1 : Closed with the brake pedal depressed

L4 Light Failure Sensor

1, 2, 7–Ground : Approx. 12 volts with the stop light SW on
4, 8–Ground : Approx. 12 volts with the ignition SW at ON position
11–Ground : Always continuity

[P] **: Parts Location**

Code	See Page	Code	See Page	Code	See Page
C7	34	L4	36	R7	37
H17	36	R6	37	S6	35

[Q] **: Relay Blocks**

Code	See Page	Relay Blocks (Relay Block Location)
1	18	R/B No.1 (Instrument Panel Brace LH)

[R] **: Junction Block and Wire Harness Connector**

Code	See Page	Junction Block and Wire Harness (Connector Location)
IB	20	Instrument Panel Wire and Instrument Panel J/B (Lower Finish Panel)
3C	22	Instrument Panel Wire and J/B No.3 (Instrument Panel Brace LH)

[S] **: Connector Joining Wire Harness and Wire Harness**

Code	See Page	Joining Wire Harness and Wire Harness (Connector Location)
IE1	42	Floor Wire and Instrument Panel Wire (Left Kick Panel)
BV1	50	Luggage Room Wire and Floor Wire (Luggage Room Left)

[T] **: Ground Points**

Code	See Page	Ground Points Location
BL	50	Under the Left Center Pillar
BO	50	Back Panel Center

[U] **: Splice Points**

Code	See Page	Wire Harness with Splice Points	Code	See Page	Wire Harness with Splice Points
I5	44	Cowl Wire	B18	50	Luggage Room Wire

[N] : Explains the system outline.

[O] : Indicates values or explains the function for reference during troubleshooting.

[P] : Indicates the reference page showing the position on the vehicle of the parts in the system circuit.

Example : Part ”L4” (Light Failure Sensor) is on page 36 of the manual.
∗ The letter in the code is from the first letter of the part, and the number indicates its order in parts starting with that letter.

Example : L 4
- 4 — Parts is 4th in order
- L — Light Failure Sensor

[Q] : Indicates the reference page showing the position on the vehicle of Relay Block Connectors in the system circuit.

Example : Connector ”1” is described on page 18 of this manual and is installed on the left side of the instrument panel.

[R] : Indicates the reference page showing the position on the vehicle of J/B and Wire Harness in the system circuit.

Example : Connector ”3C” connects the Instrument Panel Wire and J/B No.3. It is described on page 22 of this manual, and is installed on the instrument panel left side.

[S] : Indicates the reference page describing the wiring harness and wiring harness connector (the female wiring harness is shown first, followed by the male wiring harness).

Example : Connector ”IE1” connects the floor wire (female) and Instrument panel wire (male). It is described on page 42 of this manual, and is installed on the left side kick panel.

[T] : Indicates the reference page showing the position of the ground points on the vehicle.

Example : Ground point ”BO” is described on page 50 of this manual and is installed on the back panel center.

[U] : Indicates the reference page showing the position of the splice points on the vehicle.

Example : Splice point ”I5” is on the Cowl Wire Harness and is described on page 44 of this manual.

B HOW TO USE THIS MANUAL

The ground points circuit diagram shows the connections from all major parts to the respective ground points. When troubleshooting a faulty ground point, checking the system circuits which use a common ground may help you identify the problem ground quickly. The relationship between ground points (EA , IB and IC shown below) can also be checked this way.

I GROUND POINT

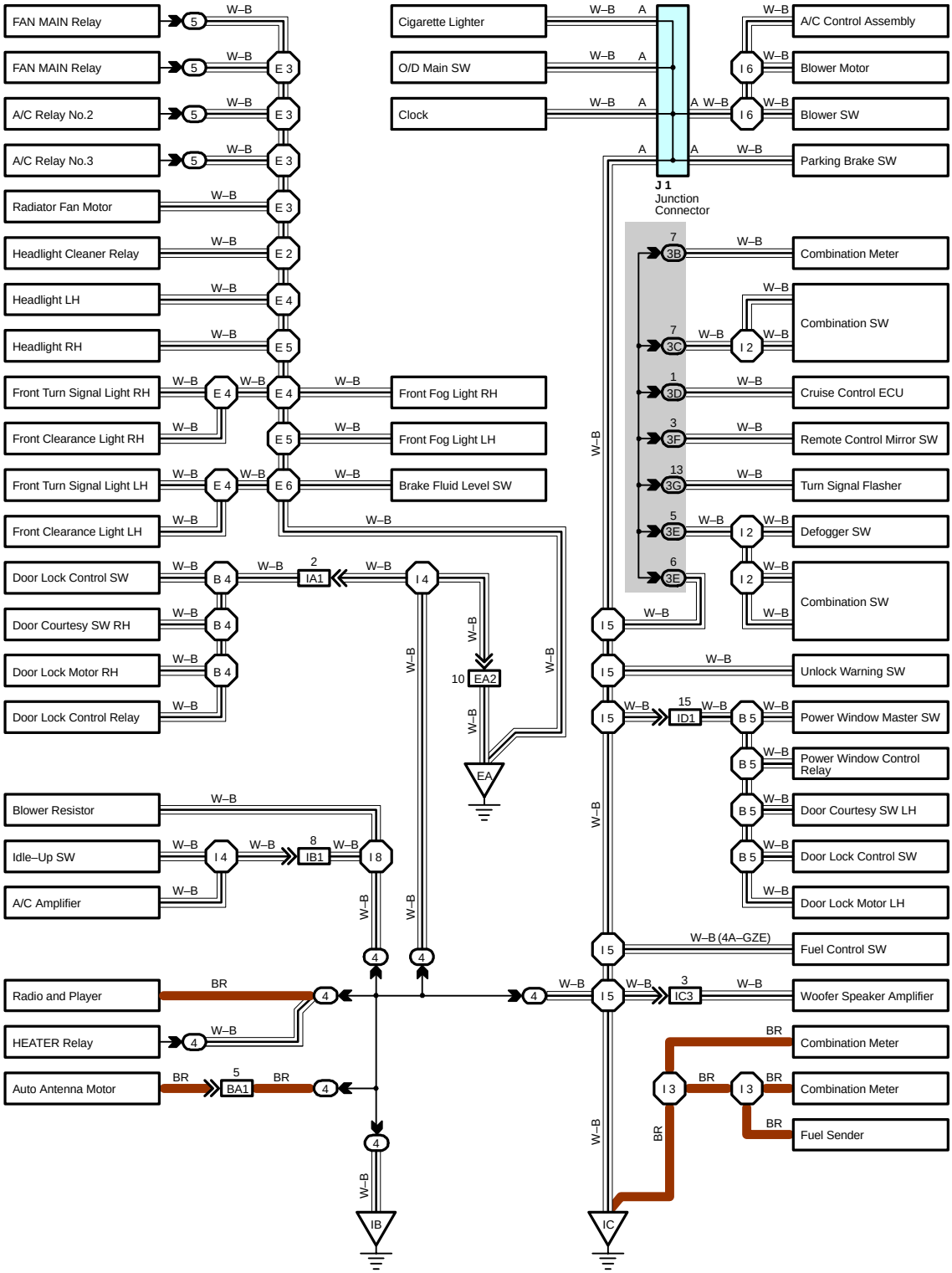

＊ The system shown here is an EXAMPLE ONLY. It is different to the actual circuit shown in the SYSTEM CIRCUITS SECTION.

The ”Current Flow Chart” section, describes which parts each power source (fuses, fusible links, and circuit breakers) transmits current to. In the Power Source circuit diagram, the conditions when battery power is supplied to each system are explained. Since all System Circuit diagrams start from the power source, the power source system must be fully understood.

J POWER SOURCE (Current Flow Chart)

The chart below shows the route by which current flows from the battery to each electrical source (Fusible Link, Circuit Breaker, Fuse, etc.) and other parts.

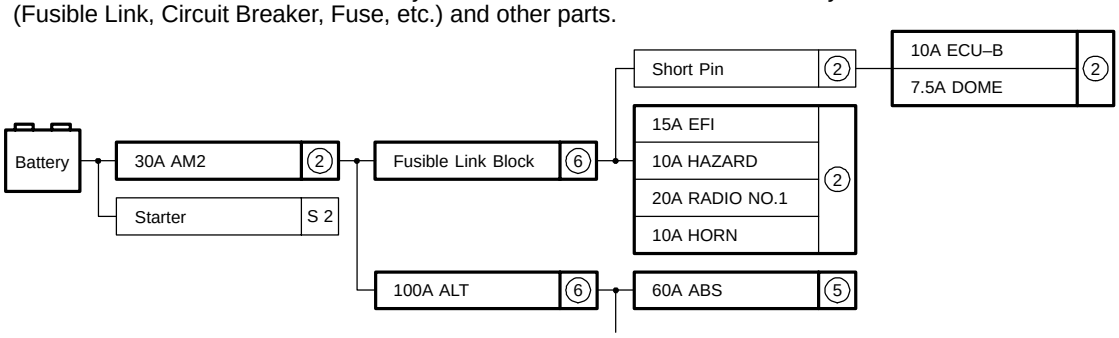

Engine Room R/B (See Page 20)

Fuse		System	Page
20A	STOP	ABS ABS and Traction Control Cruise Control Electronically Controlled Transmission Multiplex Communication System	194 187 180 166 210
10A	DOME	Cigarette Lighter Combination Meter Headlight Interior Light Key Reminder and Seat Belt Warning Light Auto Turn Off Theft Deterrent and Door Lock	214 230 112 122

Power Source

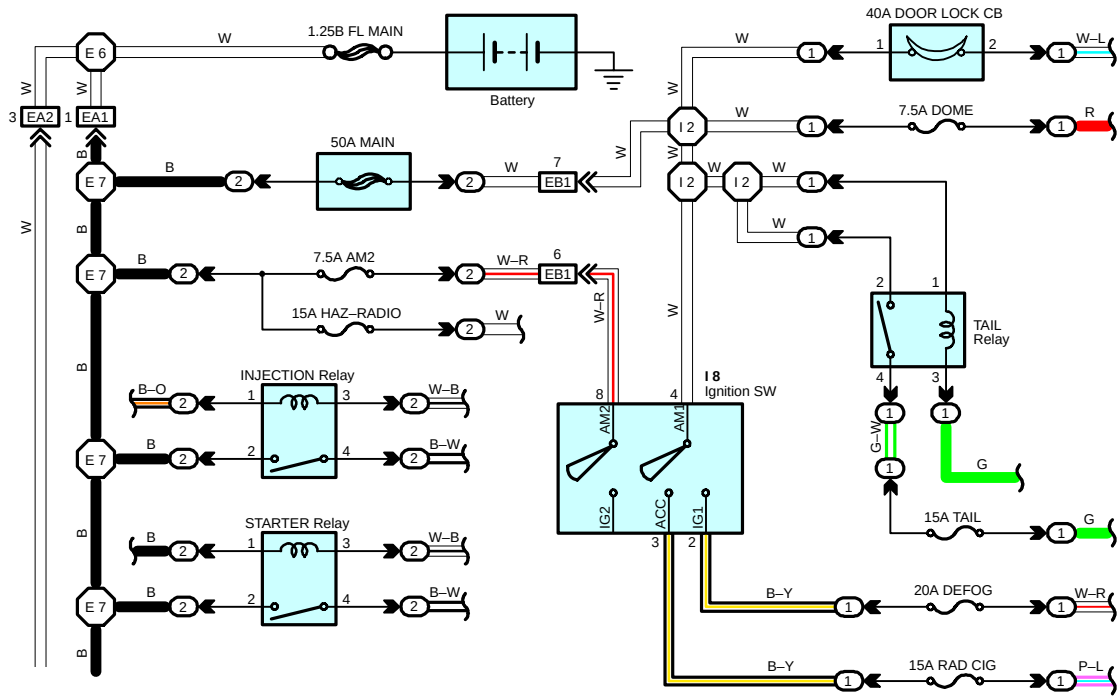

＊ The system shown here is an EXAMPLE ONLY. It is different to the actual circuit shown in the SYSTEM CIRCUITS SECTION.

K CONNECTOR LIST

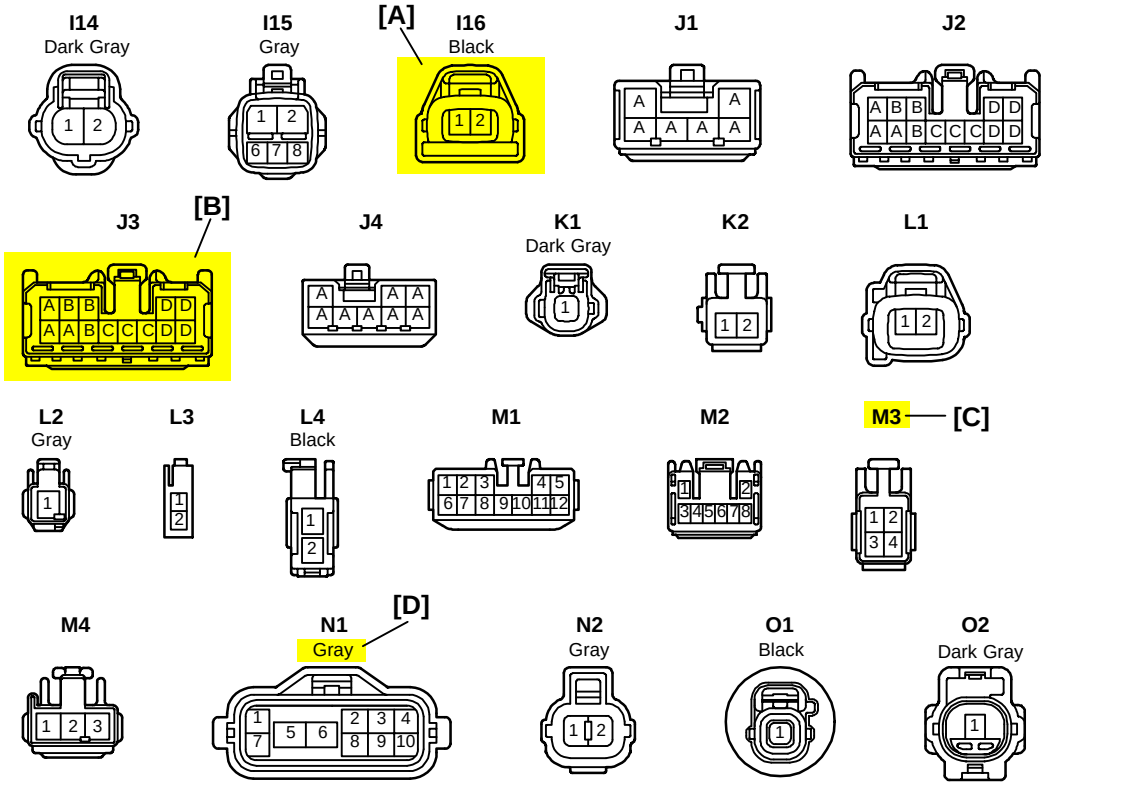

[A] : Indicates connector to be connected to a part. (The numeral indicates the pin No.)

[B] : Junction Connector
Indicates a connector which is connected to a short terminal.

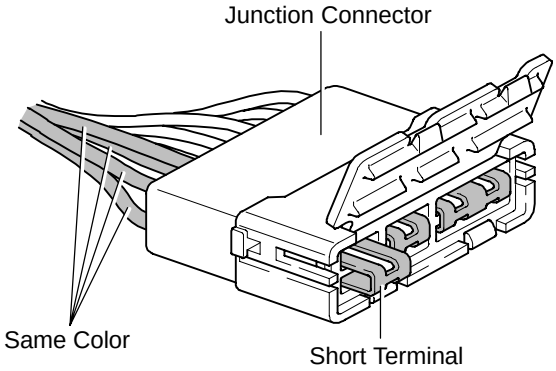

Junction connector in this manual include a short terminal which is connected to a number of wire harnesses. Always perform inspection with the short terminal installed. (When installing the wire harnesses, the harnesses can be connected to any position within the short terminal grouping. Accordingly, in other vehicles, the same position in the short terminal may be connected to a wire harness from a different part.)
Wire harness sharing the same short terminal grouping have the same color.

[C] : Parts Code
The first letter of the code is taken from the first letter of part, and the numbers indicates its order in parts which start with the same letter.

[D] : Connector Color
Connectors not indicated are milky white in color.

L PART NUMBER OF CONNECTORS

Code	Part Name	Part Number
A 1	A/C Ambient Temp. Sensor	90980–11070
A 2	A/C Condenser Fan Motor	90980–11237
A 3	A/C Condenser Fan Relay	90980–10940
A 4	A/C Condenser Fan Resistor	90980–10928
A 5	A/C Magnetic Clutch	90980–11271
A 6	A/T Oil Temp. Sensor	90980–11413
[A]	ABS Actuat [B]	909 [C] 151
A 8	ABS Actuator	90980–11009
A 9	ABS Speed Sensor Front LH	90980–10941
A10	ABS Speed Sensor Front RH	90980–11002
A11	Airbag Sensor Front LH	90980–11856
A12	Airbag Sensor Front RH	
A13	[illegible]	90980–11194
[illegible]	[illegible]	90980–11[illegible]

Code	Part Name	Part Number
D 4	Diode (Courtesy)	90980–11608
D 5	Diode (Interior Light)	90980–10962
D 6	Diode (Moon Roof)	90980–11608
D 7	Door Lock Control Relay	90980–10848
D 8	Door Lock Control SW LH	90980–11148
D 9	Door Lock Control SW RH	
D10	Door Courtesy SW LH	90980–11097
D11	Door Courtesy SW RH	
D12	Door Courtesy SW Front LH	90980–11156
D13	Door Courtesy SW Front RH	
D14	Door Courtesy SW Rear LH	
D15	Door Courtesy SW Rear RH	
D16	[illegible] and Unlock SW LH	90980–11170
[illegible]	[illegible] RH	

[A] : Part Code

[B] : Part Name

[C] : Part Number
Toyota Part Number are indicated.

Not all of the above part numbers of the connector are established for the supply.

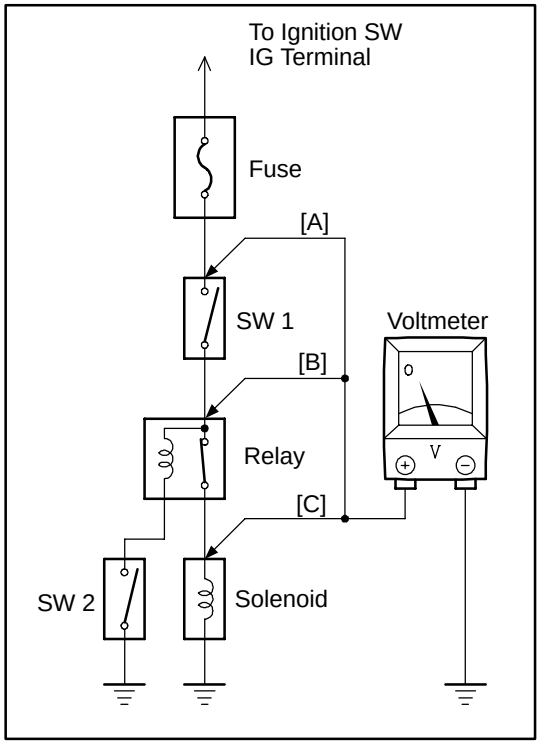

VOLTAGE CHECK

(a) Establish conditions in which voltage is present at the check point.

Example:
[A] – Ignition SW on
[B] – Ignition SW and SW 1 on
[C] – Ignition SW, SW 1 and Relay on (SW 2 off)

(b) Using a voltmeter, connect the negative lead to a good ground point or negative battery terminal, and the positive lead to the connector or component terminal.
This check can be done with a test light instead of a voltmeter.

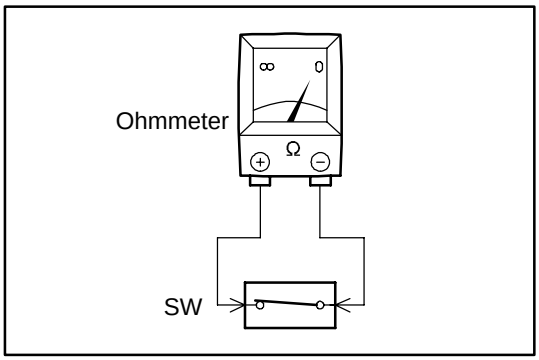

CONTINUITY AND RESISTANCE CHECK

(a) Disconnect the battery terminal or wire so there is no voltage between the check points.

(b) Contact the two leads of an ohmmeter to each of the check points.

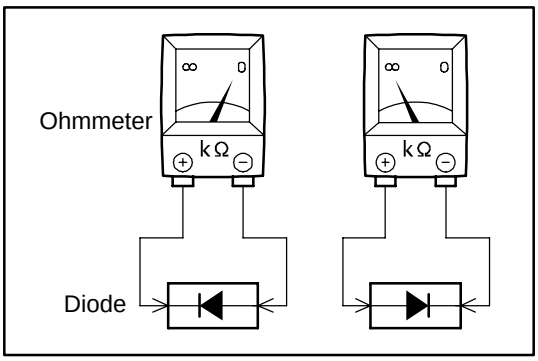

If the circuit has diodes, reverse the two leads and check again.
When contacting the negative lead to the diode positive side and the positive lead to the negative side, there should be continuity.
When contacting the two leads in reverse, there should be no continuity.

(c) Use a volt/ohmmeter with high impedance (10 kΩ/V minimum) for troubleshooting of the electrical circuit.

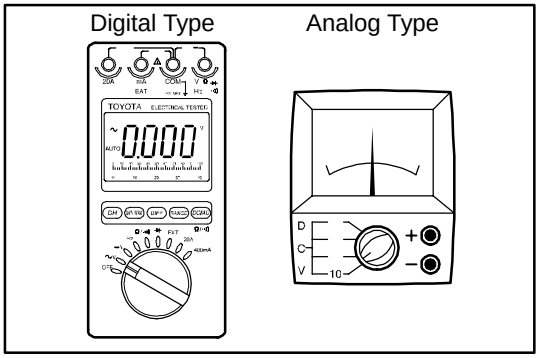

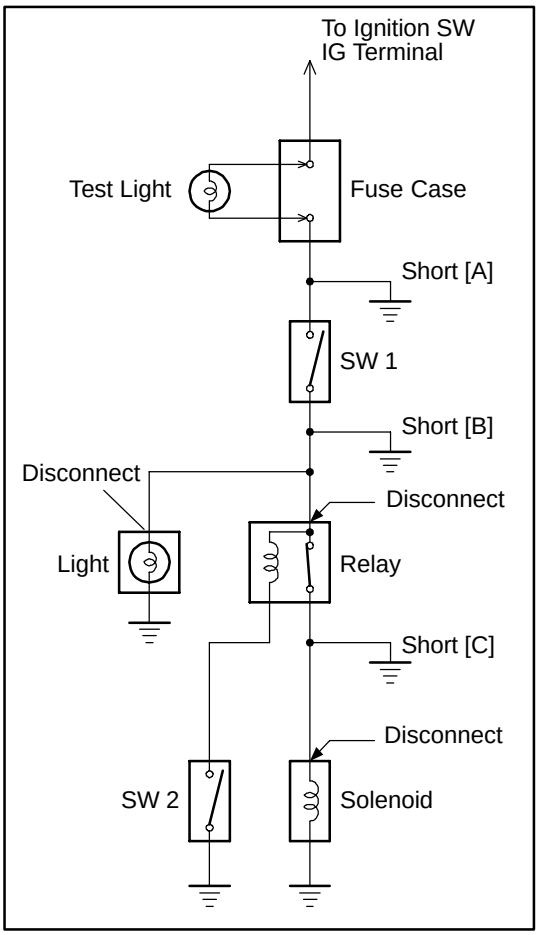

FINDING A SHORT CIRCUIT

(a) Remove the blown fuse and disconnect all loads of the fuse.

(b) Connect a test light in place of the fuse.

(c) Establish conditions in which the test light comes on.

Example:
[A] – Ignition SW on
[B] – Ignition SW and SW 1 on
[C] – Ignition SW, SW 1 and Relay on (Connect the Relay) and SW 2 off (or Disconnect SW 2)

(d) Disconnect and reconnect the connectors while watching the test light.
The short lies between the connector where the test light stays lit and the connector where the light goes out.

(e) Find the exact location of the short by lightly shaking the problem wire along the body.

CAUTION:

(a) Do not open the cover or the case of the ECU unless absolutely necessary. (If the IC terminals are touched, the IC may be destroyed by static electricity.)

(b) When replacing the internal mechanism (ECU part) of the digital meter, be careful that no part of your body or clothing comes in contact with the terminals of leads from the IC, etc. of the replacement part (spare part).

DISCONNECTION OF MALE AND FEMALE CONNECTORS

To pull apart the connectors, pull on the connector itself, not the wire harness.

HINT : Check to see what kind of connector you are disconnecting before pulling apart.

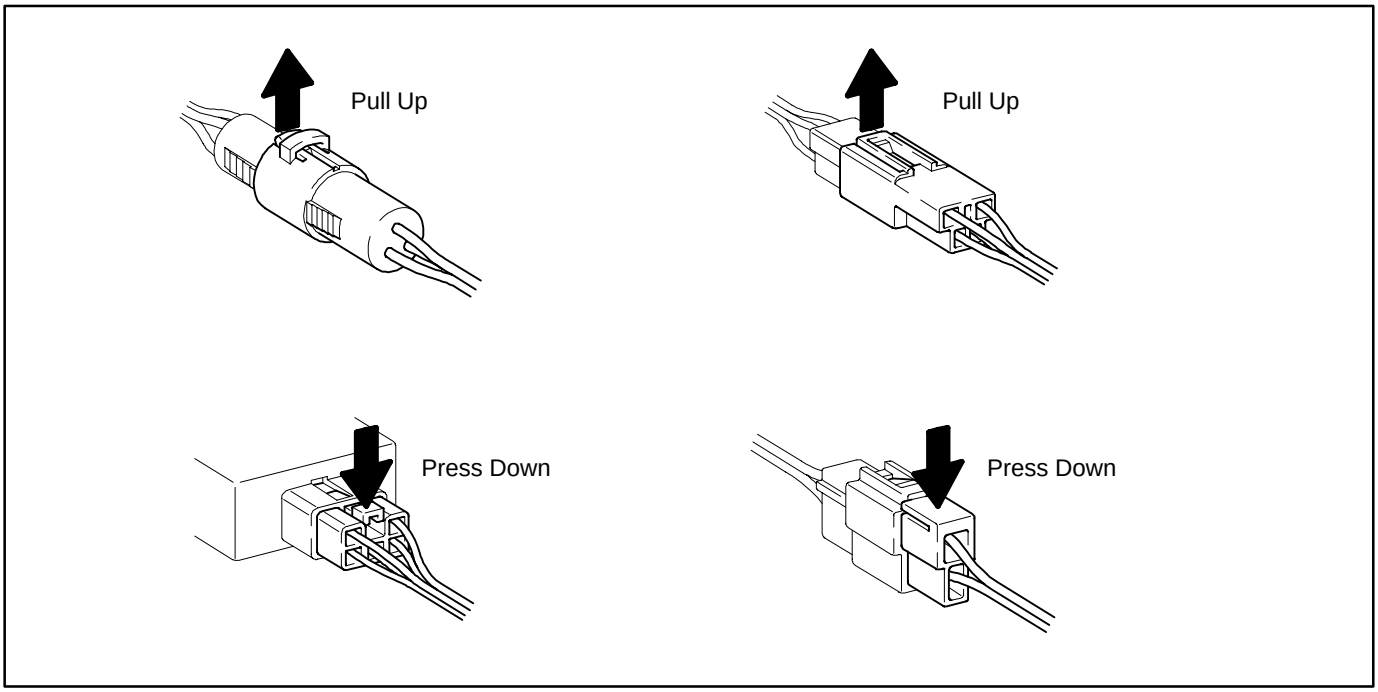

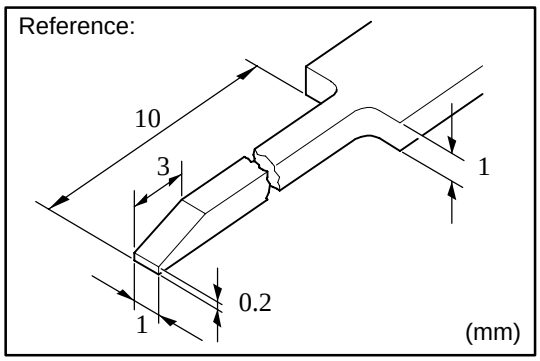

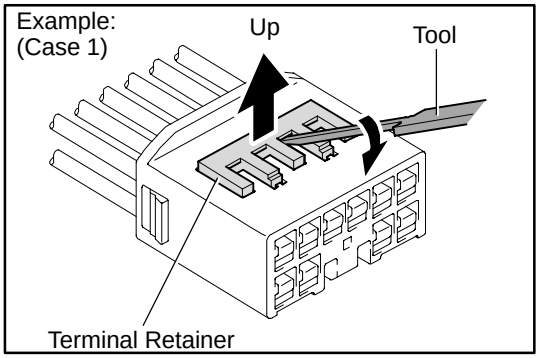

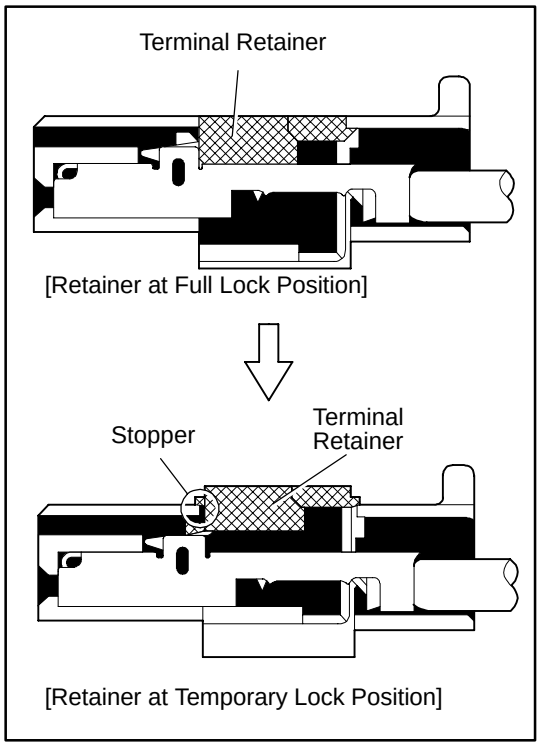

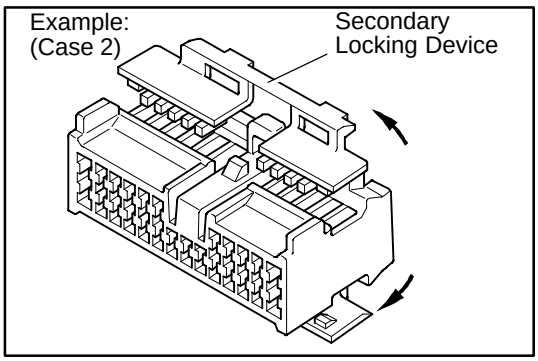

HOW TO REPLACE TERMINAL (with terminal retainer or secondary locking device)

1. PREPARE THE SPECIAL TOOL

   HINT : To remove the terminal from the connector, please construct and use the special tool or like object shown on the left.

2. DISCONNECT CONNECTOR

3. DISENGAGE THE SECONDARY LOCKING DEVICE OR TERMINAL RETAINER.

   (a) Locking device must be disengaged before the terminal locking clip can be released and the terminal removed from the connector.

   (b) Use a special tool or the terminal pick to unlock the secondary locking device or terminal retainer.

   NOTICE:
   Do not remove the terminal retainer from connector body.

   [A] For Non–Waterproof Type Connector

   HINT : The needle insertion position varies according to the connector's shape (number of terminals etc.), so check the position before inserting it.

   "Case 1"

   Raise the terminal retainer up to the temporary lock position.

   "Case 2"

   Open the secondary locking device.

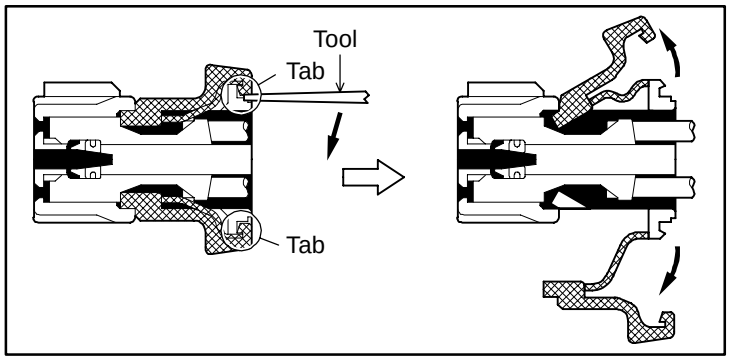

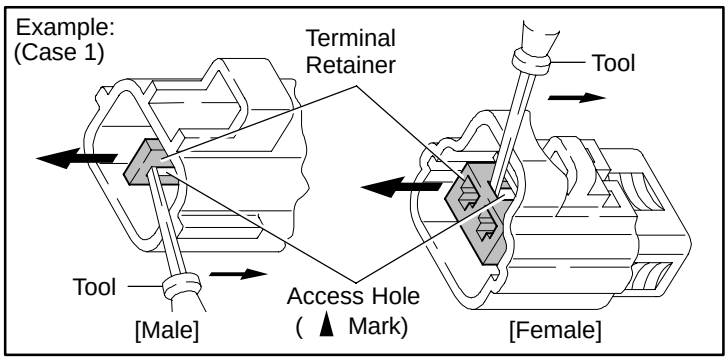

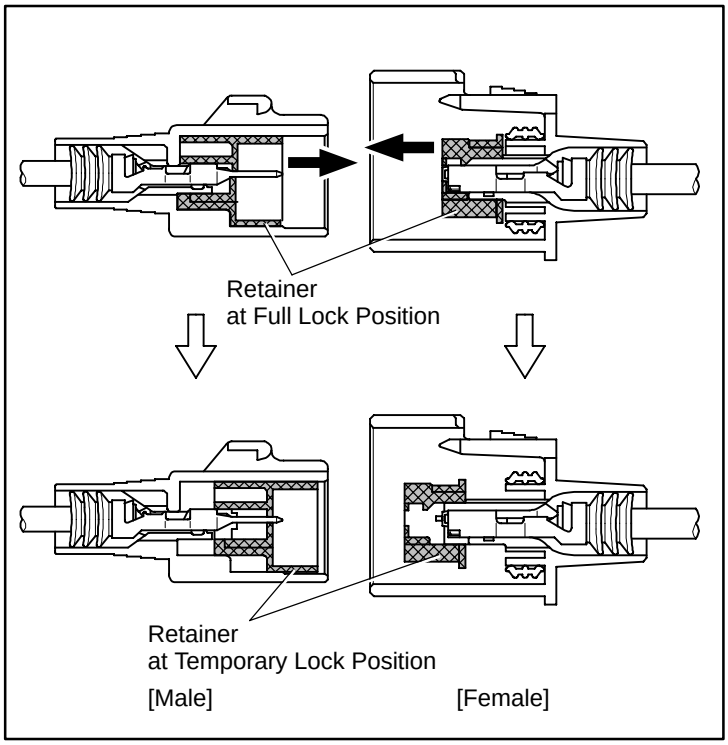

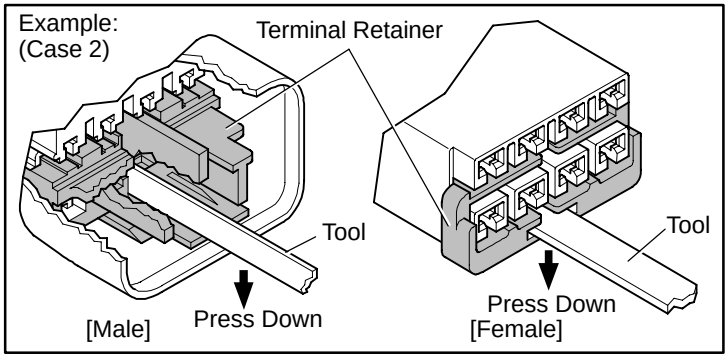

[B] For Waterproof Type Connector

HINT : Terminal retainer color is different according to connector body.

Example:

Terminal Retainer	: Connector Body
Black or White	: Gray
Black or White	: Dark Gray
Gray or White	: Black

”Case 1”

Type where terminal retainer is pulled up to the temporary lock position (Pull Type).

Insert the special tool into the terminal retainer access hole (▲Mark) and pull the terminal retainer up to the temporary lock position.

HINT : The needle insertion position varies according to the connector’s shape (Number of terminals etc.), so check the position before inserting it.

”Case 2”

Type which cannot be pulled as far as Power Lock insert the tool straight into the access hole of terminal retainer as shown.

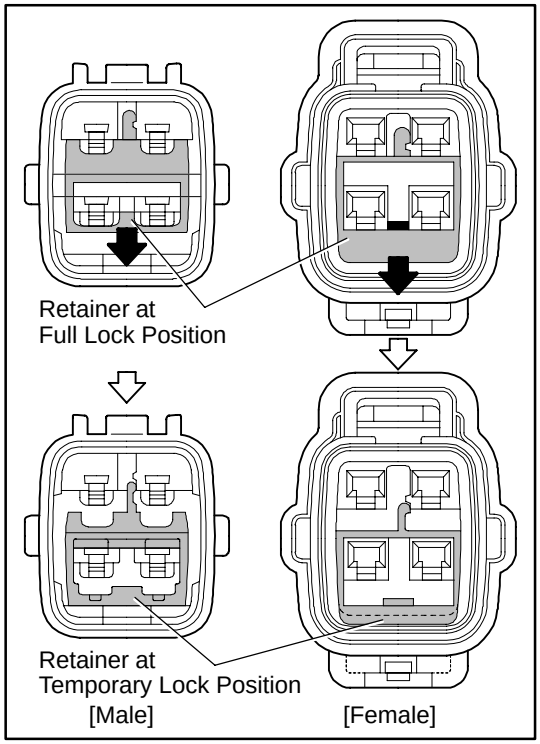

Push the terminal retainer down to the temporary lock position.

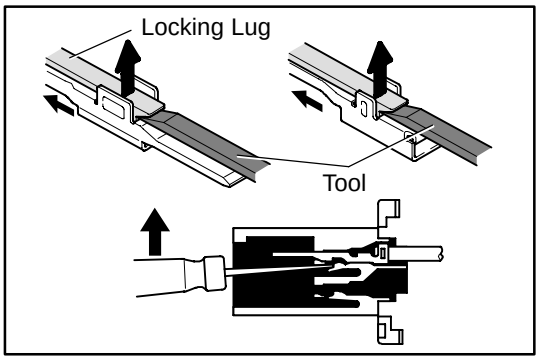

(c) Release the locking lug from terminal and pull the terminal out from rear.

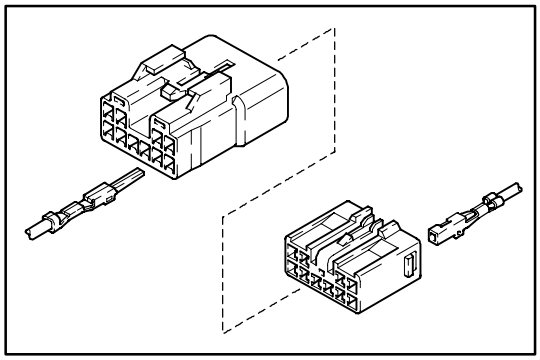

4. INSTALL TERMINAL TO CONNECTOR

(a) Insert the terminal.

HINT:
1. Make sure the terminal is positioned correctly.
2. Insert the terminal until the locking lug locks firmly.
3. Insert the terminal with terminal retainer in the temporary lock position.

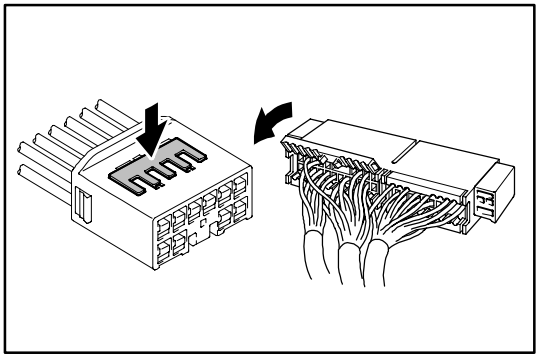

(b) Push the secondary locking device or terminal retainer in to the full lock position.

5. CONNECT CONNECTOR

ABBREVIATIONS

The following abbreviations are used in this manual.

A/C	=	Air Conditioning
A/T	=	Automatic Transmission
ABS	=	Anti–Lock Brake System
ACIS	=	Acoustic Control Induction System
BEAN	=	Body Electronics Area Network
CAN	=	Controller Area Network
CD	=	Compact Disc
DIFF.	=	Differential
DVD	=	Digital Versatile Disc
EC	=	Electrochromic
ECU	=	Electronic Control Unit
ESA	=	Electronic Spark Advance
ETCS–i	=	Electronic Throttle Control System–intelligent
EVAP	=	Evaporative Emission
IC	=	Integrated Circuit
INT	=	Intermittent
J/B	=	Junction Block
LH	=	Left–Hand
R/B	=	Relay Block
RH	=	Right–Hand
SFI	=	Sequential Multiport Fuel Injection
SRS	=	Supplemental Restraint System
SW	=	Switch
TEMP.	=	Temperature
TRAC	=	Traction Control
VSC	=	Vehicle Stability Control
VSV	=	Vacuum Switching Valve
VVT	=	Variable Valve Timing
VVT–i	=	Variable Valve Timing–intelligent
w/	=	With
w/o	=	Without

∗ The titles given inside the components are the names of the terminals (terminal codes) and are not treated as being abbreviations.

E GLOSSARY OF TERMS AND SYMBOLS

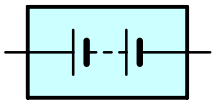

BATTERY
Stores chemical energy and converts it into electrical energy. Provides DC current for the auto's various electrical circuits.

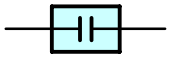

CAPACITOR (Condenser)
A small holding unit for temporary storage of electrical voltage.

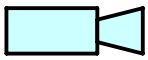

CIGARETTE LIGHTER
An electric resistance heating element.

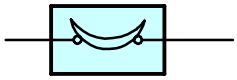

CIRCUIT BREAKER
Basically a reusable fuse, a circuit breaker will heat and open if too much current flows through it. Some units automatically reset when cool, others must be manually reset.

DIODE
A semiconductor which allows current flow in only one direction.

DIODE, ZENER
A diode which allows current flow in one direction but blocks reverse flow only up to a specific voltage. Above that potential, it passes the excess voltage. This acts as a simple voltage regulator.

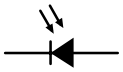

PHOTODIODE
The photodiode is a semiconductor which controls the current flow according to the amount of light.

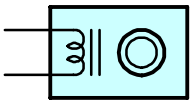

DISTRIBUTOR, IIA
Channels high–voltage current from the ignition coil to the individual spark plugs.

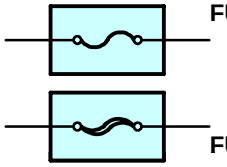

(for Medium Current Fuse)

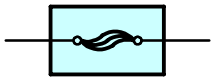

(for High Current Fuse or Fusible Link)

FUSE
A thin metal strip which burns through when too much current flows through it, thereby stopping current flow and protecting a circuit from damage.

FUSIBLE LINK
A heavy–gauge wire placed in high amperage circuits which burns through on overloads, thereby protecting the circuit. The numbers indicate the crosssection surface area of the wires.

GROUND
The point at which wiring attaches to the Body, thereby providing a return path for an electrical circuit; without a ground, current cannot flow.

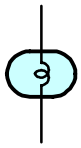

1. SINGLE FILAMENT

2. DOUBLE FILAMENT

HEADLIGHTS
Current flow causes a headlight filament to heat up and emit light. A headlight may have either a single (1) filament or a double (2) filament

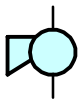

HORN
An electric device which sounds a loud audible signal.

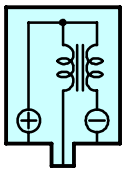

IGNITION COIL
Converts low–voltage DC current into high–voltage ignition current for firing the spark plugs.

LIGHT
Current flow through a filament causes the filament to heat up and emit light.

LED (LIGHT EMITTING DIODE)
Upon current flow, these diodes emit light without producing the heat of a comparable light.

METER, ANALOG
Current flow activates a magnetic coil which causes a needle to move, thereby providing a relative display against a background calibration.

METER, DIGITAL
Current flow activates one or many LED's, LCD's, or fluorescent displays, which provide a relative or digital display.

MOTOR
A power unit which converts electrical energy into mechanical energy, especially rotary motion.

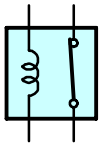

RELAY

1. NORMALLY CLOSED

Basically, an electrically operated switch which may be normally closed (1) or open (2).
Current flow through a small coil creates a magnetic field which either opens or closes an attached switch.

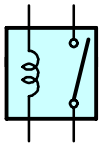

2. NORMALLY OPEN

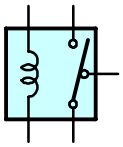

RELAY, DOUBLE THROW

A relay which passes current through one set of contacts or the other.

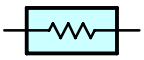

RESISTOR

An electrical component with a fixed resistance, placed in a circuit to reduce voltage to a specific value.

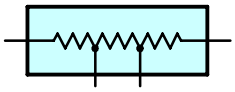

RESISTOR, TAPPED

A resistor which supplies two or more different non adjustable resistance values.

RESISTOR, VARIABLE or RHEOSTAT

A controllable resistor with a variable rate of resistance.
Also called a potentiometer or rheostat.

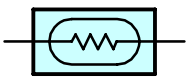

SENSOR (Thermistor)

A resistor which varies its resistance with temperature.

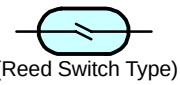

(Reed Switch Type)

SENSOR, SPEED

Uses magnetic impulses to open and close a switch to create a signal for activation of other components.

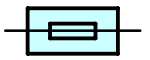

SHORT PIN

Used to provide an unbroken connection within a junction block.

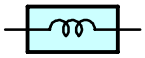

SOLENOID

An electromagnetic coil which forms a magnetic field when current flows, to move a plunger, etc.

SPEAKER

An electromechanical device which creates sound waves from current flow.

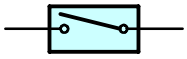

1. NORMALLY OPEN

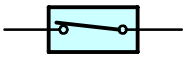

2. NORMALLY CLOSED

SWITCH, MANUAL

Opens and closes circuits, thereby stopping (1) or allowing (2) current flow.

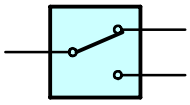

SWITCH, DOUBLE THROW

A switch which continuously passes current through one set of contacts or the other.

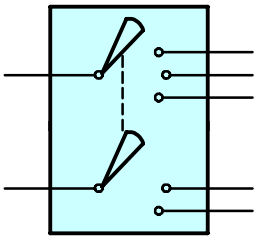

SWITCH, IGNITION

A key operated switch with several positions which allows various circuits, particularly the primary ignition circuit, to become operational.

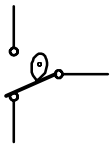

SWITCH, WIPER PARK

Automatically returns wipers to the stop position when the wiper switch is turned off.

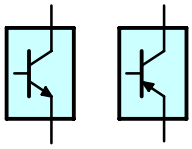

TRANSISTOR

A solidstate device typically used as an electronic relay; stops or passes current depending on the voltage applied at ”base”.

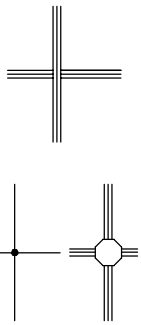

WIRES

(1) NOT CONNECTED

(2) SPLICED

Wires are always drawn as straight lines on wiring diagrams.
Crossed wires (1) without a black dot at the junction are not joined;
crossed wires (2) with a black dot or octagonal ( ) mark at the junction are spliced (joined) connections.

[Engine Compartment]

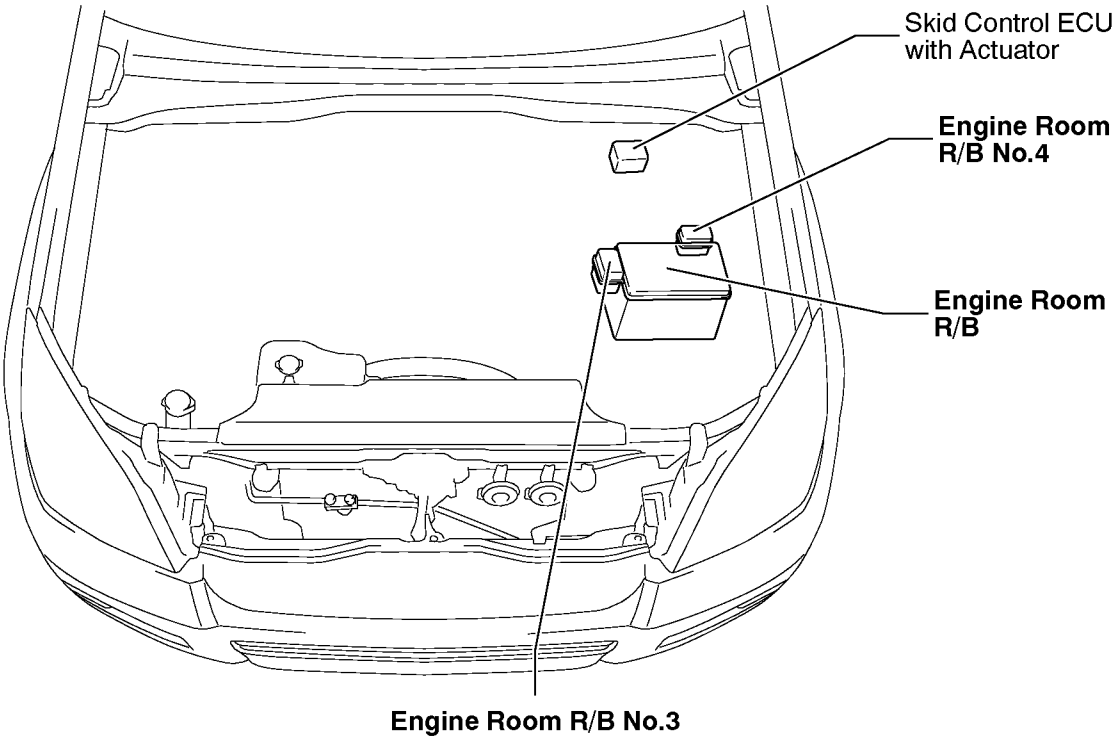

[Seat]

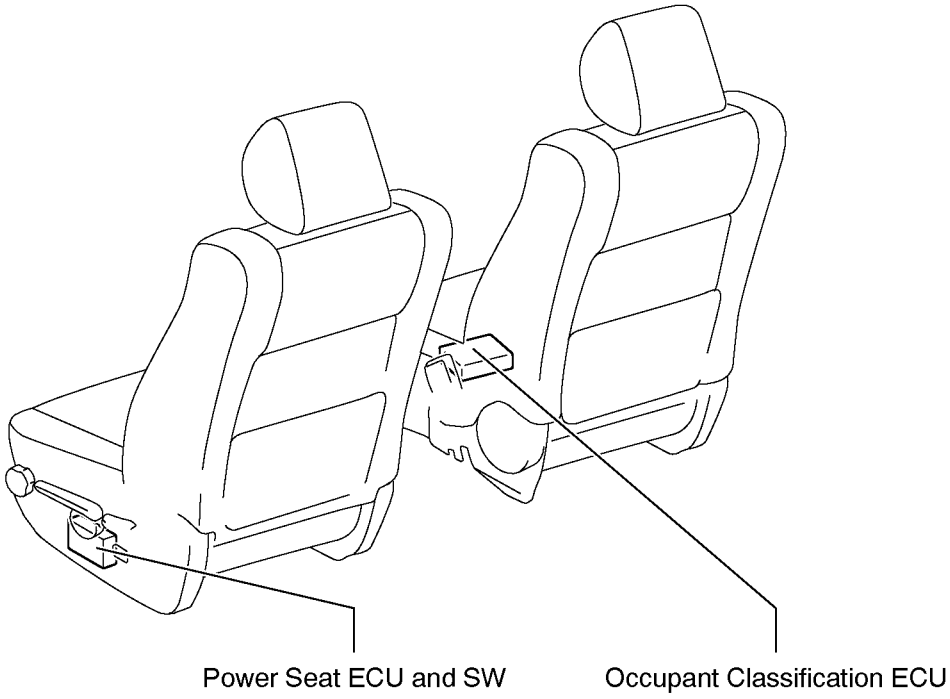

[Instrument Panel]

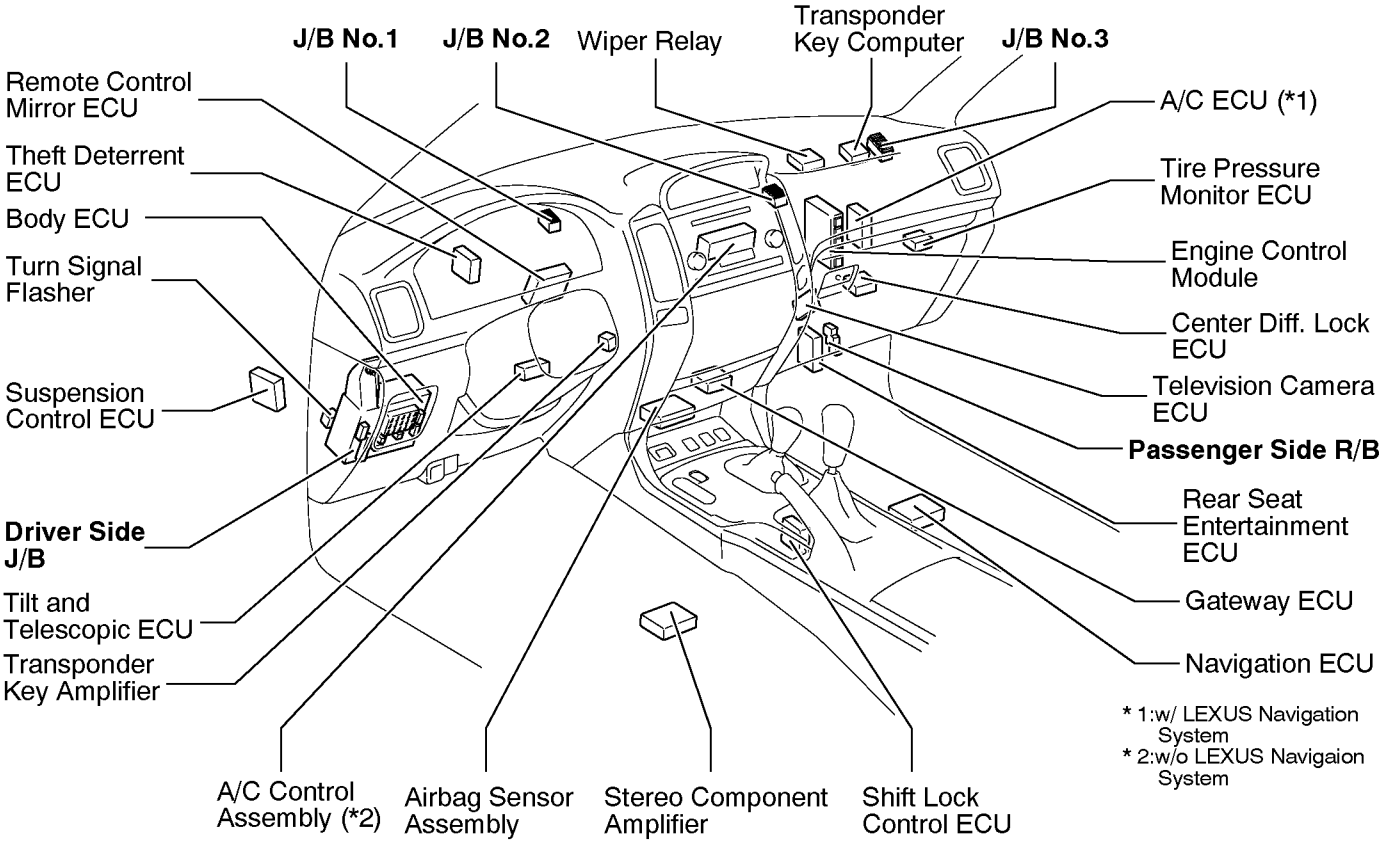

[Body]

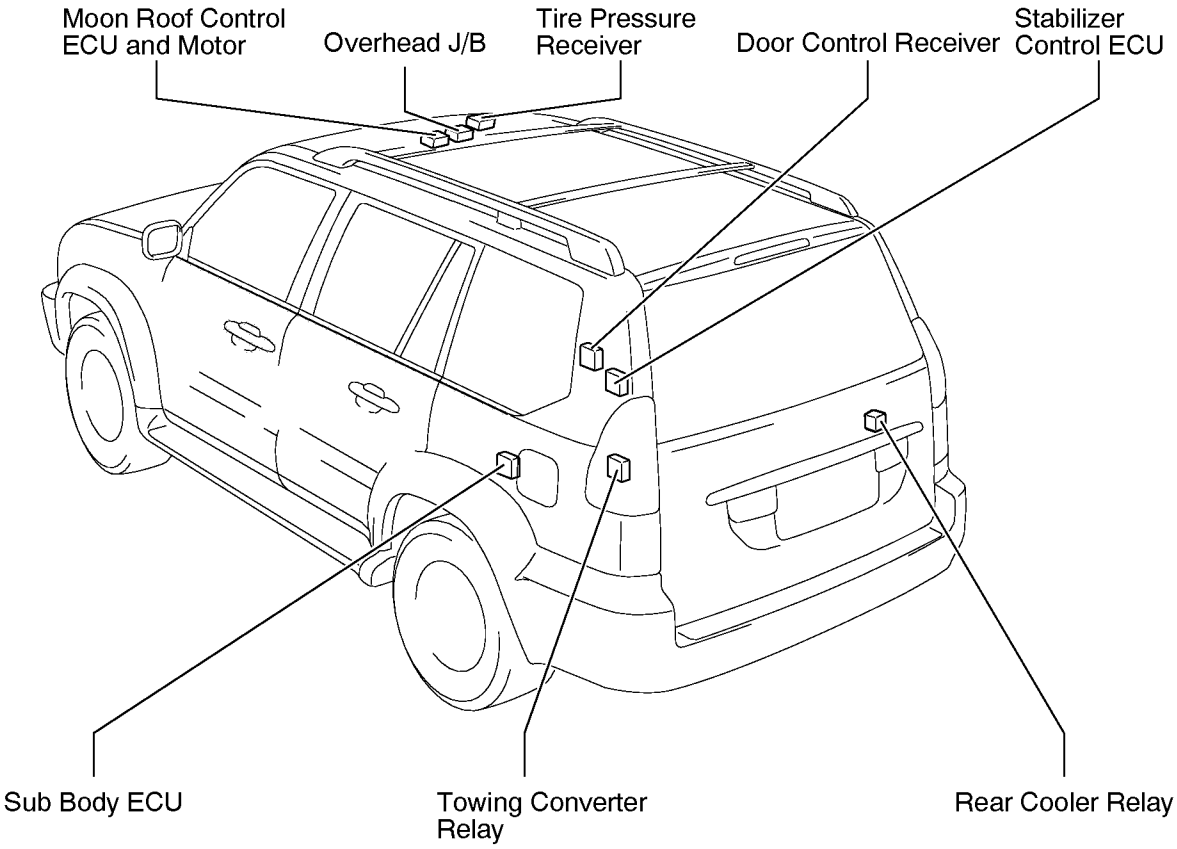

② : Engine Room R/B	Engine Compartment Left (See Page 20)

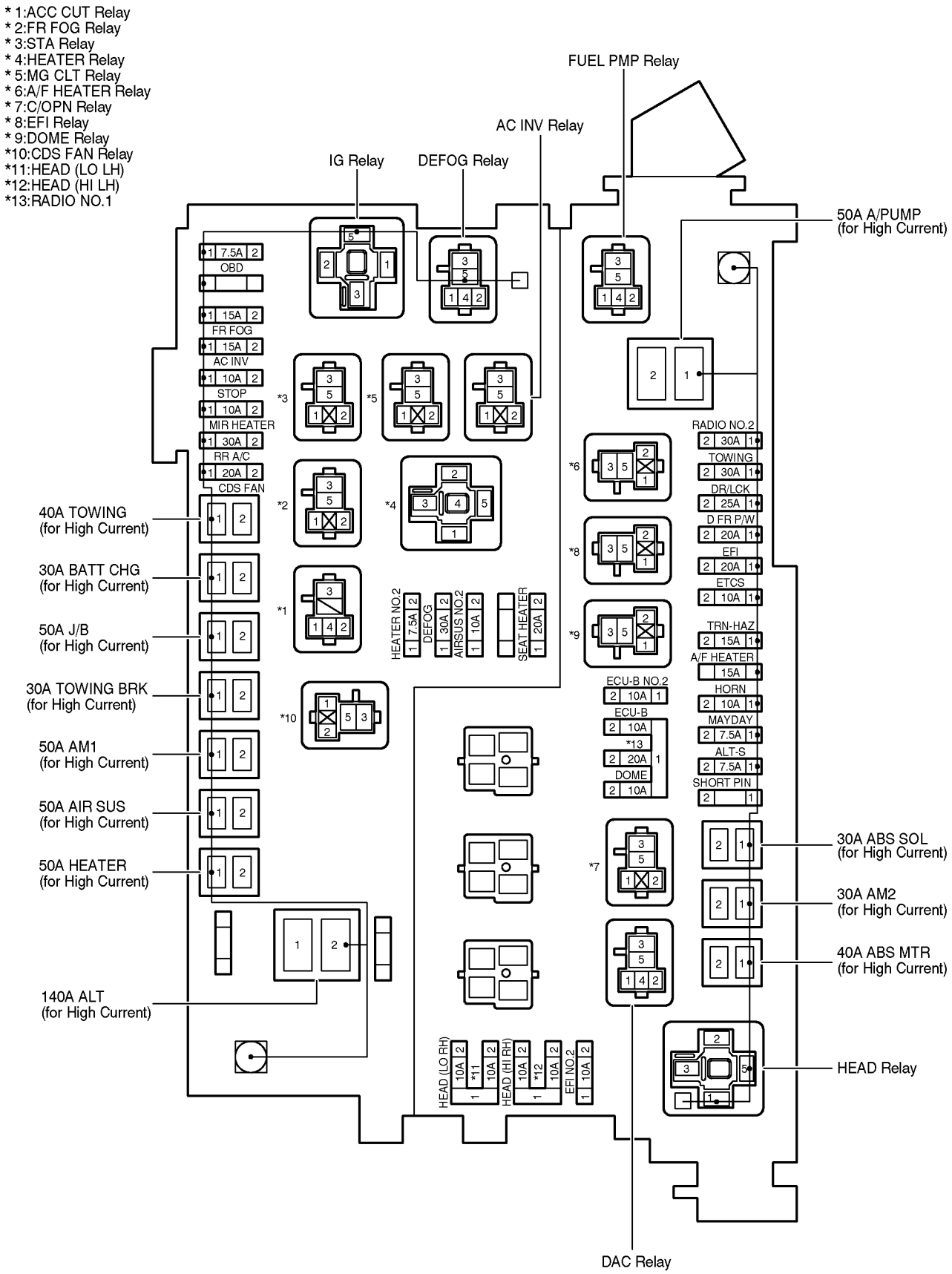

③ : Engine Room R/B No.3	Engine Compartment Left (See Page 20)

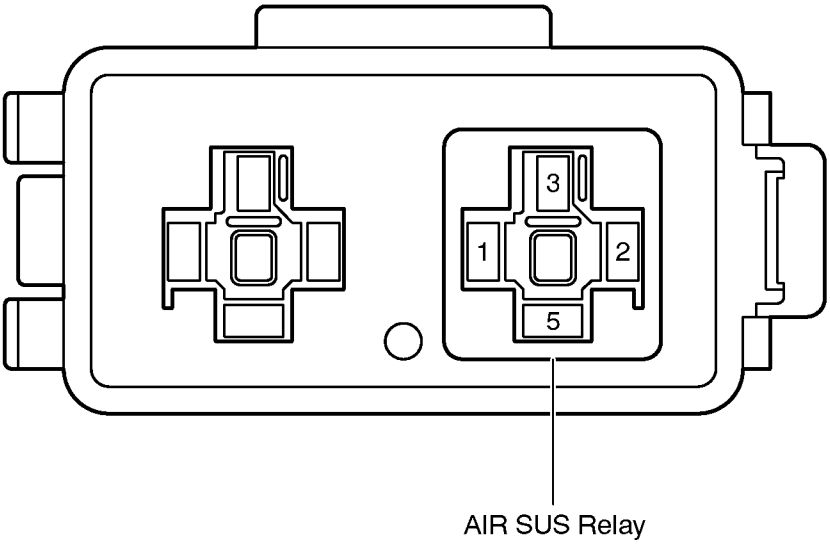

④ : Engine Room R/B No.4	Engine Compartment Left (See Page 20)

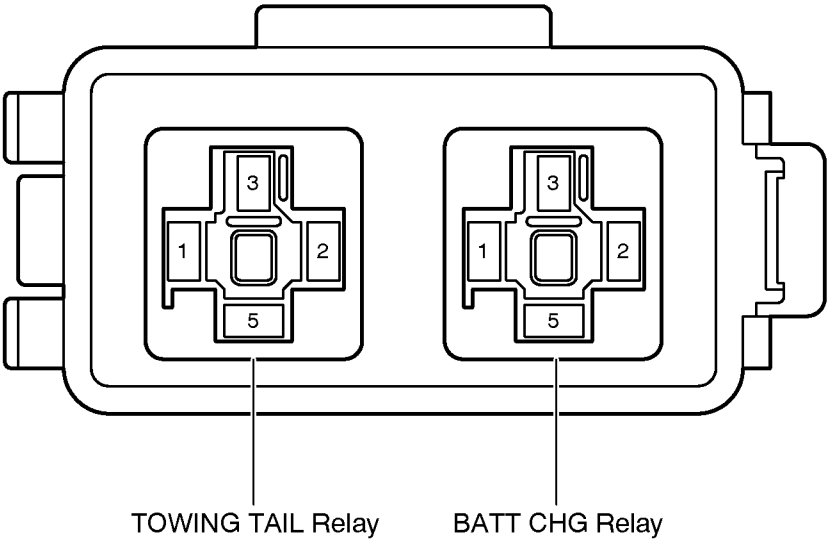

F RELAY LOCATIONS

⑤ : Passenger Side R/B	Right Kick Panel (See Page 21)

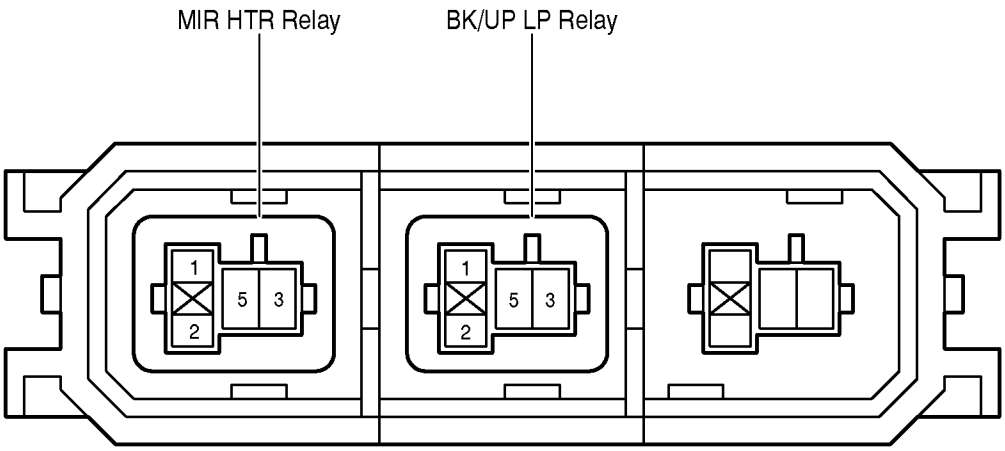

F RELAY LOCATIONS

: Driver Side J/B	Lower Finish Panel (See Page 21)

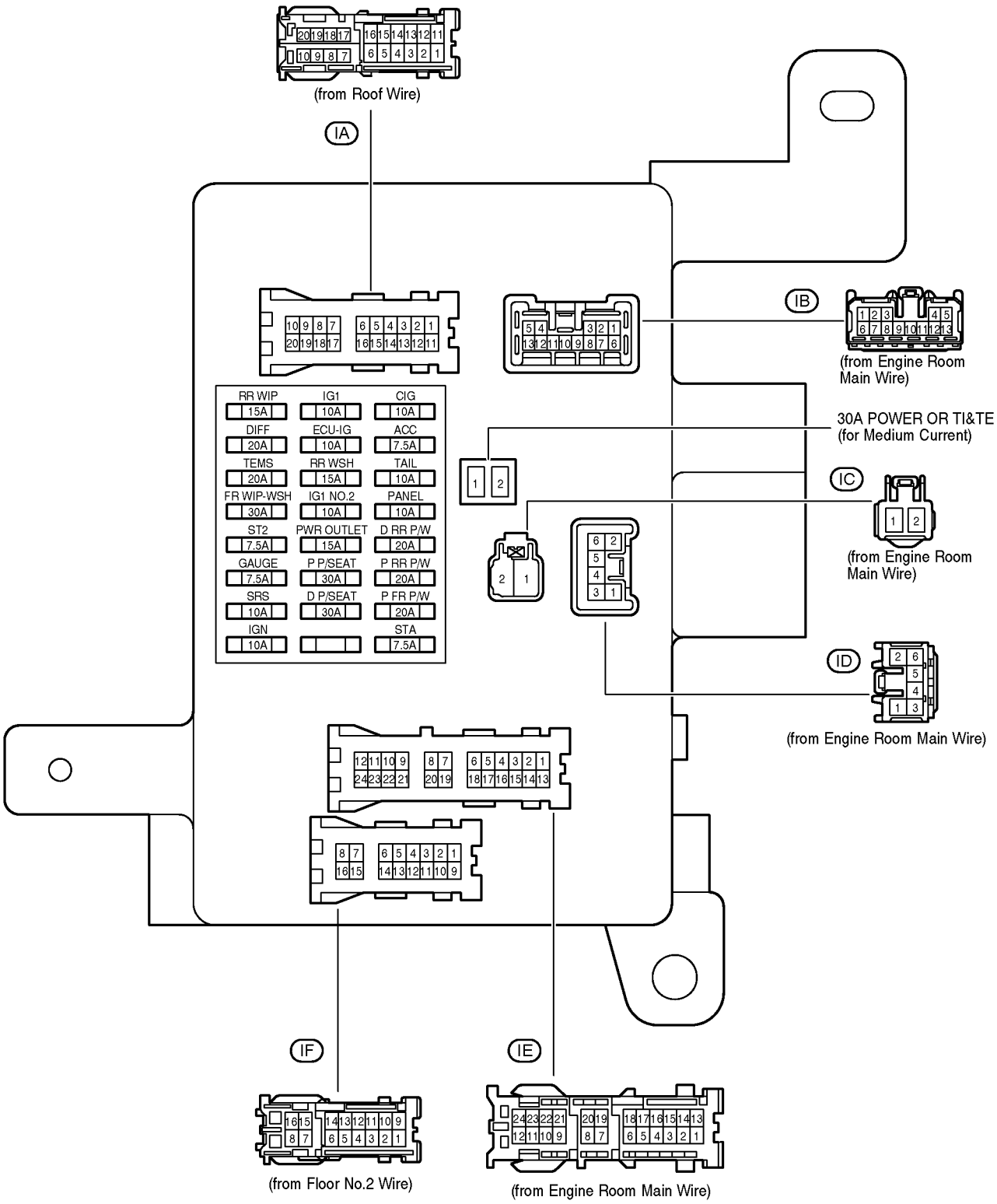

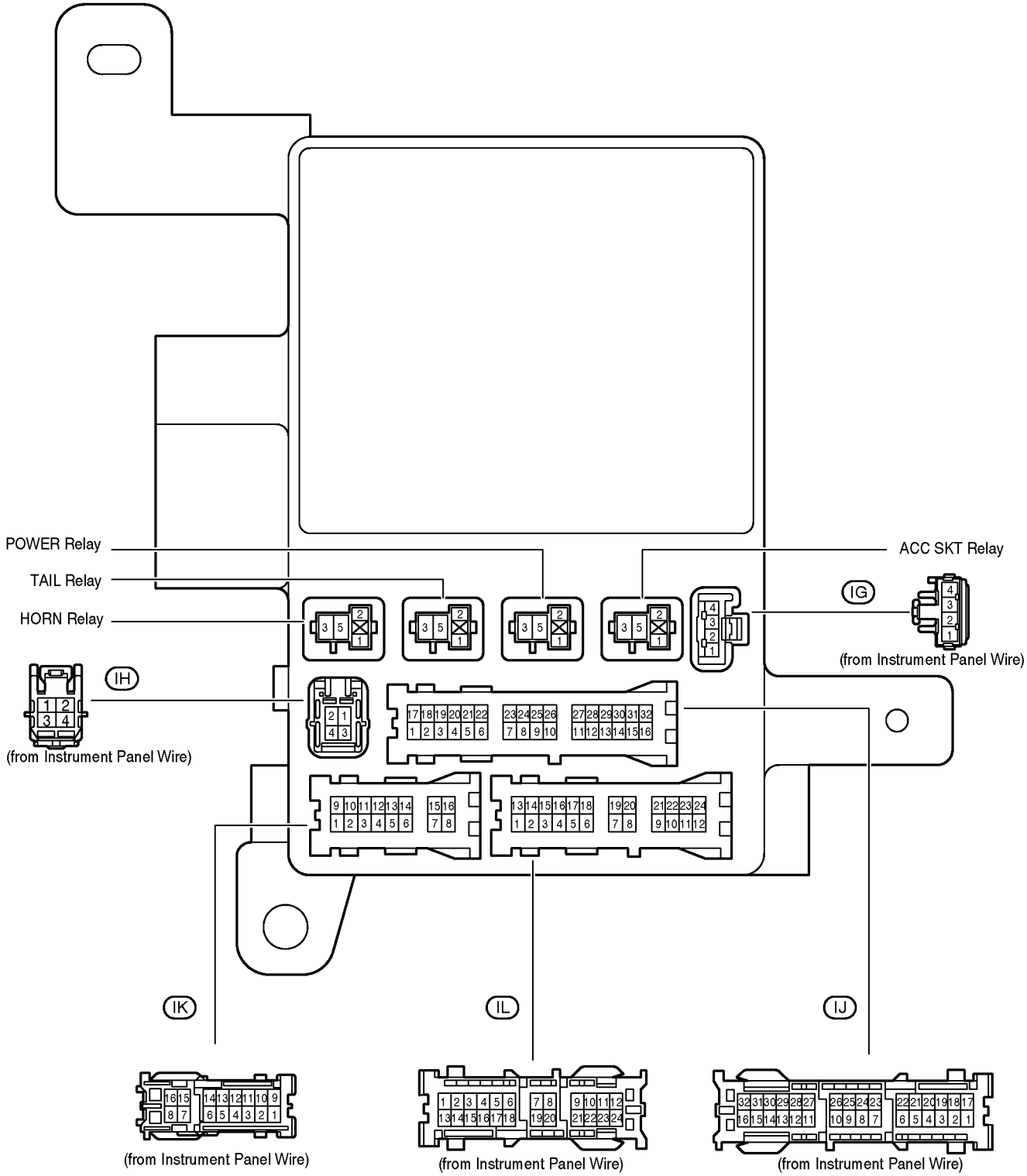
POWER Relay
TAIL Relay
HORN Relay
ACC SKT Relay
IG
(from Instrument Panel Wire)
IH
(from Instrument Panel Wire)
IK
IL
IJ
(from Instrument Panel Wire)
(from Instrument Panel Wire)
(from Instrument Panel Wire)

[Driver Side J/B Inner Circuit]

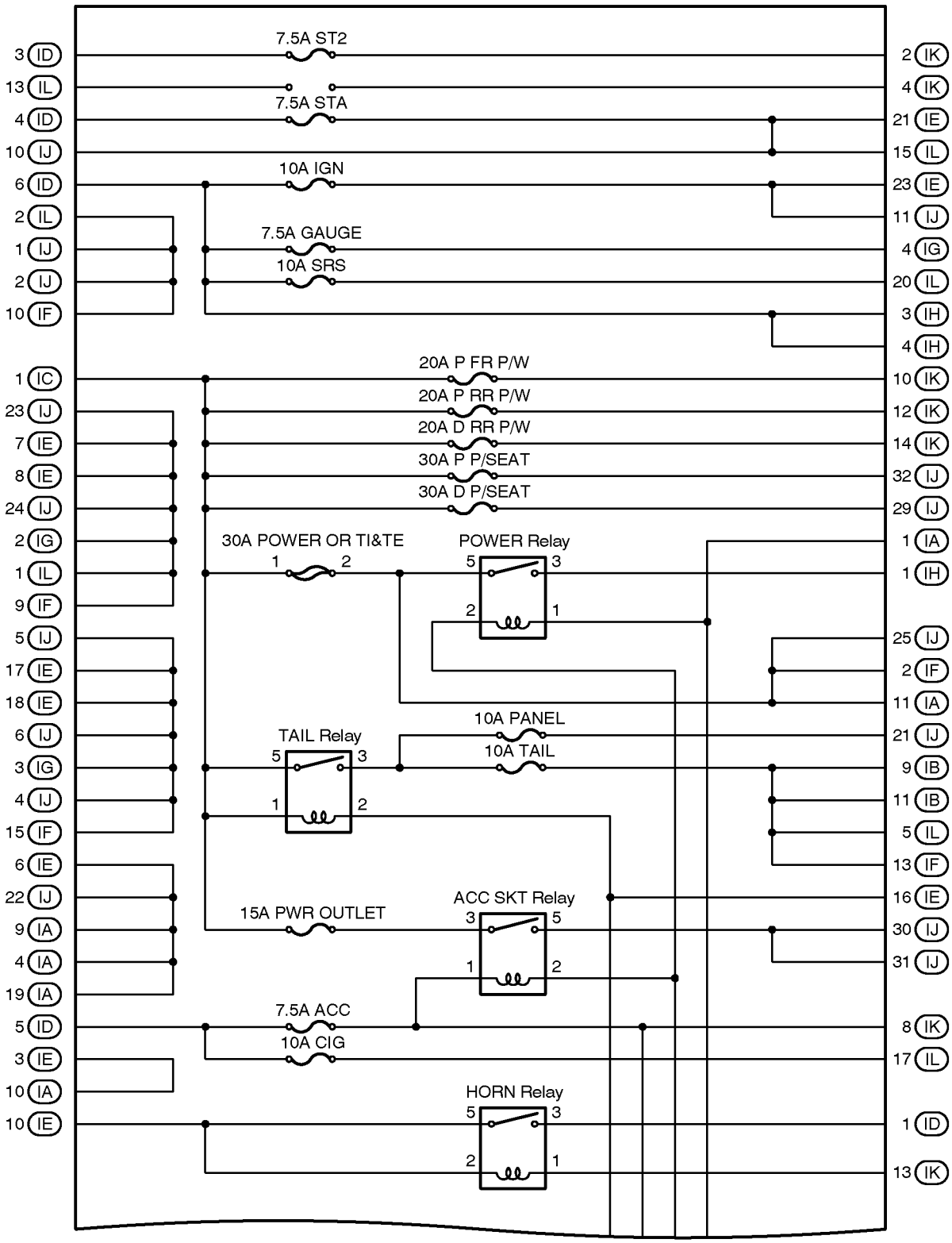

(Cont. Next Page)

(Cont' d)

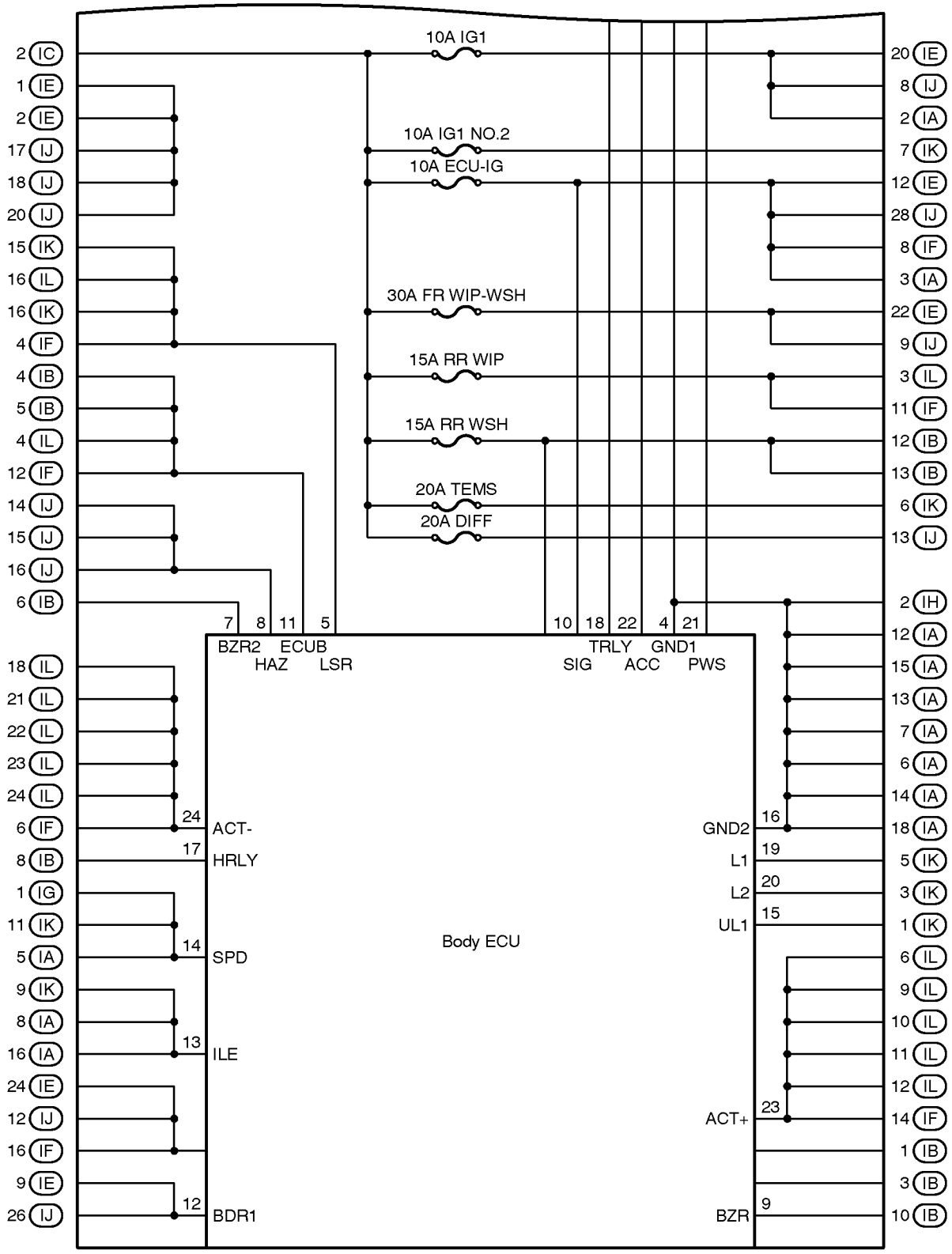
10A IG1
10A IG1 NO.2
10A ECU-IG
30A FR WIP-WSH
15A RR WIP
15A RR WSH
20A TEMS
20A DIFF
2 IC
1 IE
2 IE
17 IJ
18 IJ
20 IJ
15 IK
16 IL
16 IK
4 IF
4 IB
5 IB
4 IL
12 IF
14 IJ
15 IJ
16 IJ
6 IB
18 IL
21 IL
22 IL
23 IL
24 IL
6 IF
8 IB
1 IG
11 IK
5 IA
9 IK
8 IA
16 IA
24 IE
12 IJ
16 IF
9 IE
26 IJ
20 IE
8 IJ
2 IA
7 IK
12 IE
28 IJ
8 IF
3 IA
22 IE
9 IJ
3 IL
11 IF
12 IB
13 IB
6 IK
13 IJ
2 IH
12 IA
15 IA
13 IA
7 IA
6 IA
14 IA
18 IA
5 IK
3 IK
1 IK
6 IL
9 IL
10 IL
11 IL
12 IL
14 IF
1 IB
3 IB
10 IB
7 BZR2
8 HAZ
11 ECUB
5 LSR
10 SIG
18 TRLY
22 ACC
4 GND1
21 PWS
24 ACT-
17 HRLY
14 SPD
13 ILE
12 BDR1
16 GND2
19 L1
20 L2
15 UL1
23 ACT+
9 BZR
Body ECU

: J/B No.1	Instrument Panel Reinforcement Left (See Page 21)

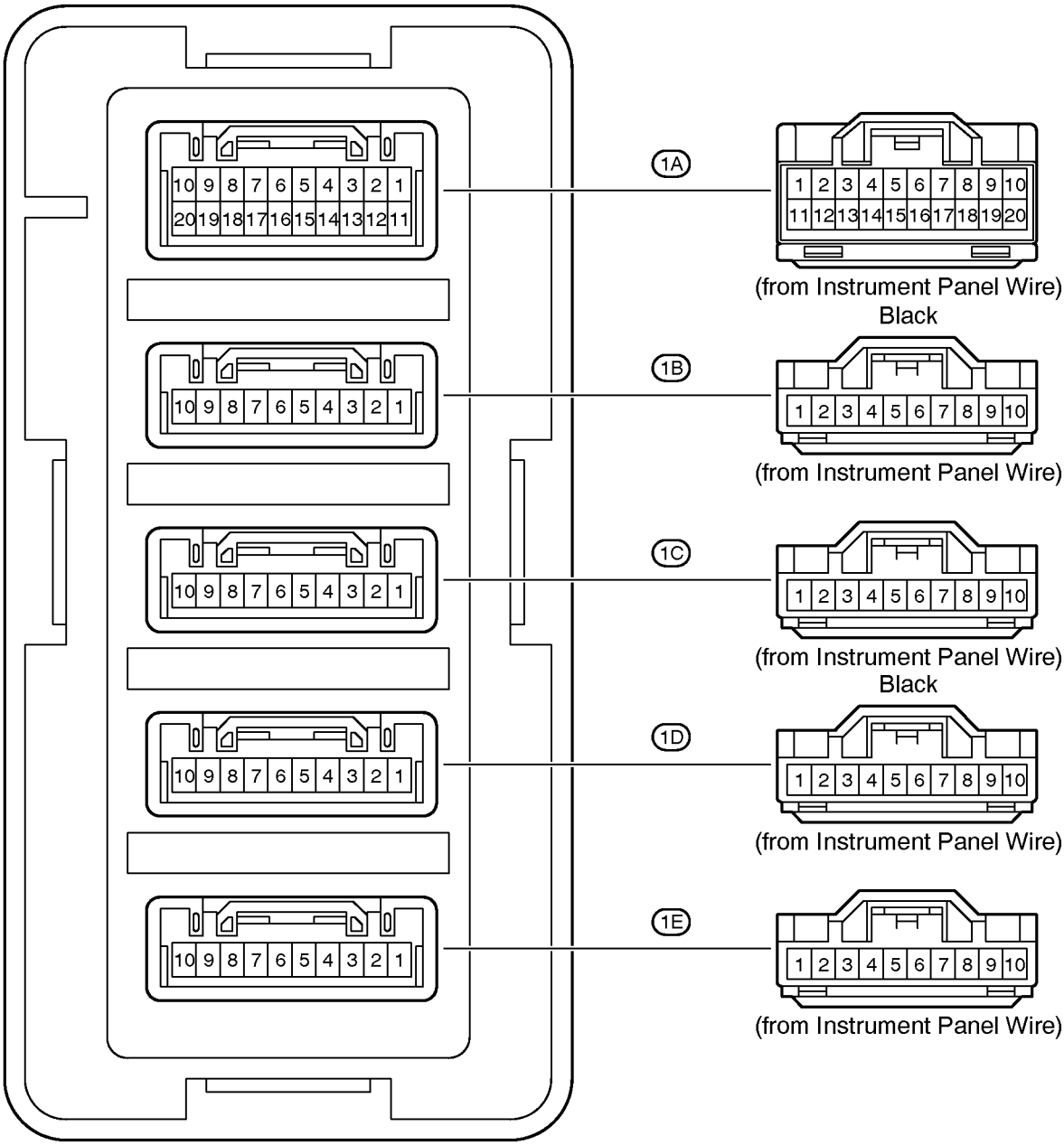

[J/B No.1 Inner Circuit]

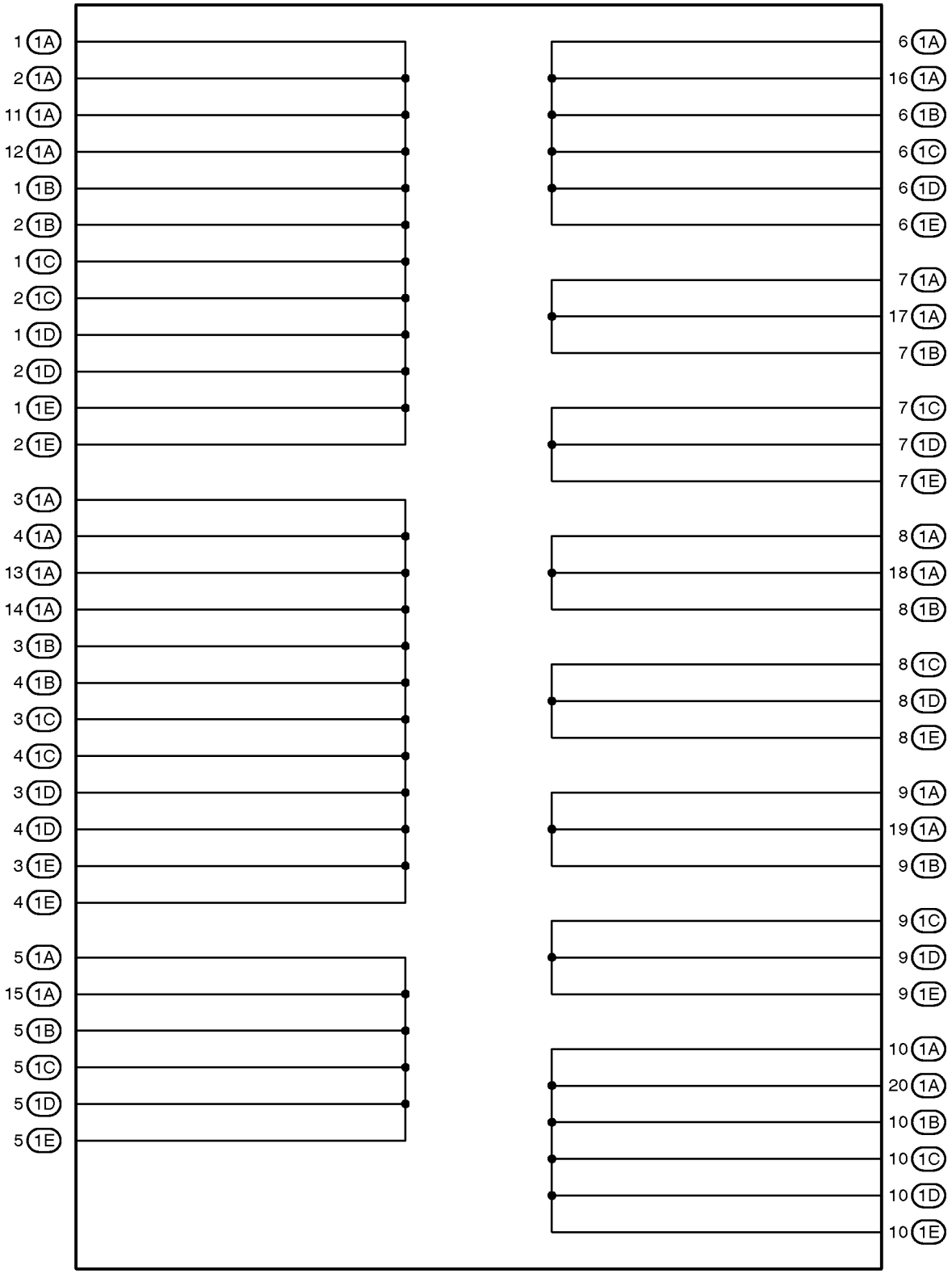

: J/B No.2	Instrument Panel Reinforcement Center (See Page 21)

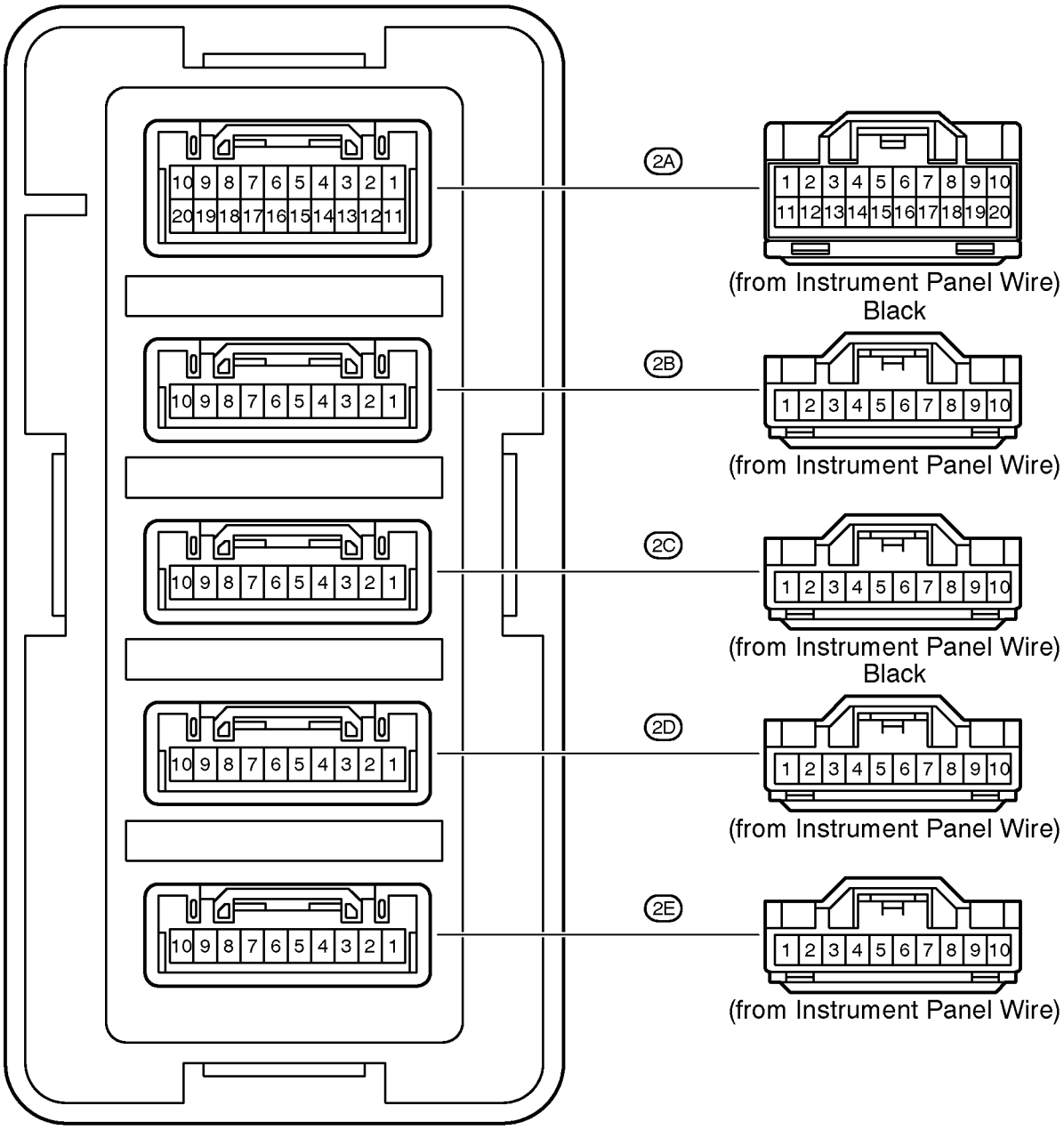

[J/B No.2 Inner Circuit]

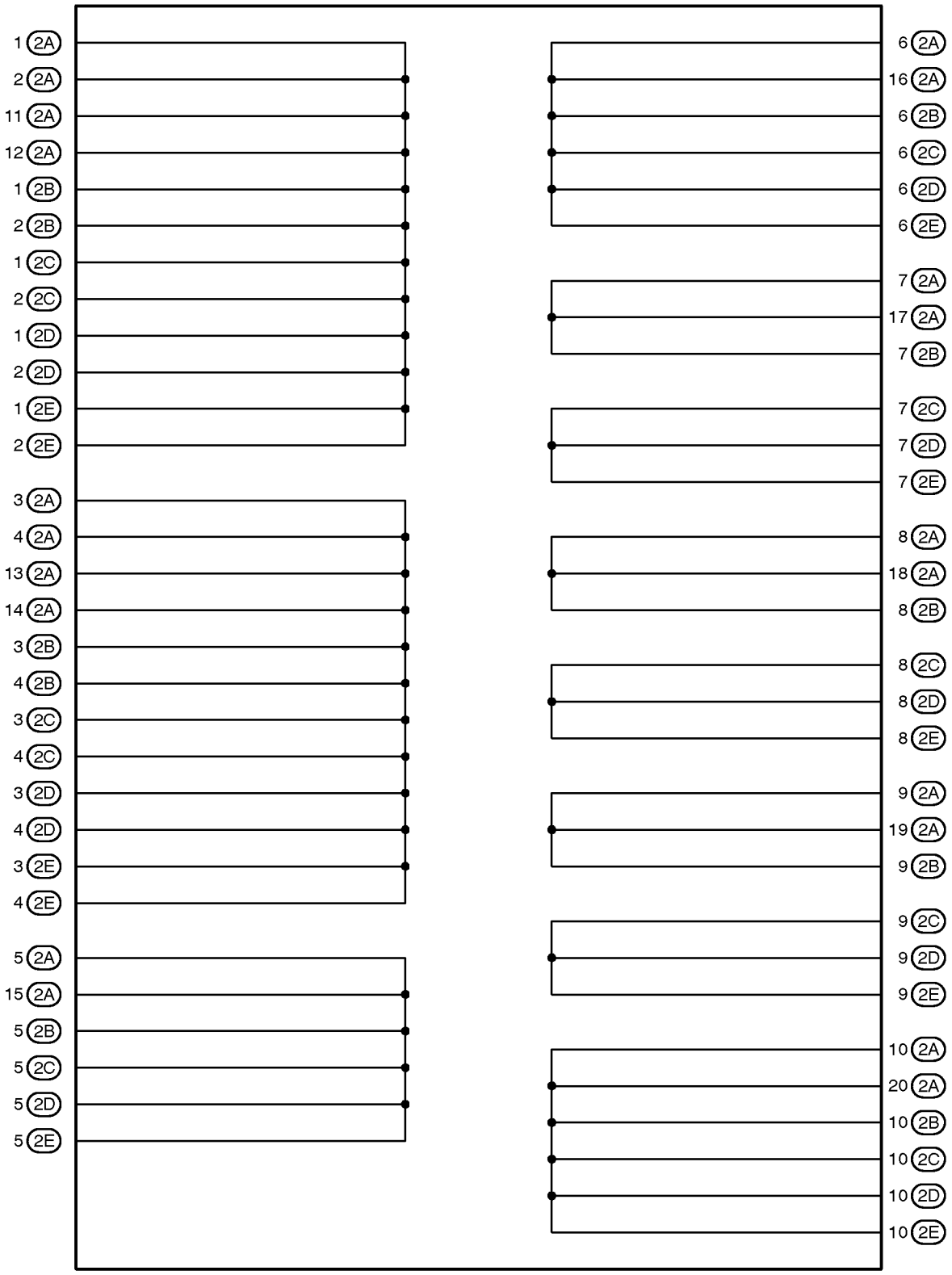

: J/B No.3	Instrument Panel Reinforcement Right (See Page 21)

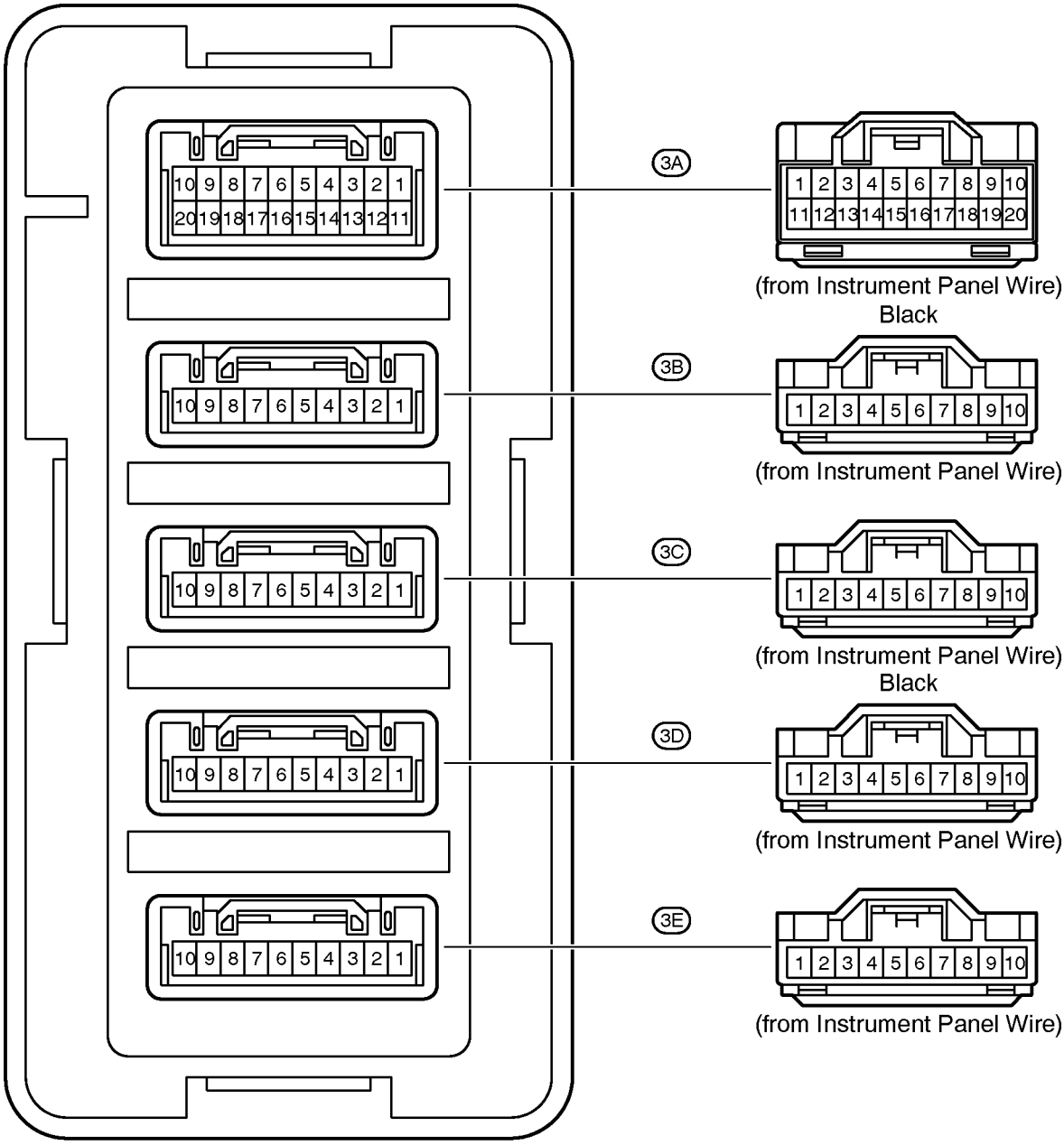

[J/B No.3 Inner Circuit]

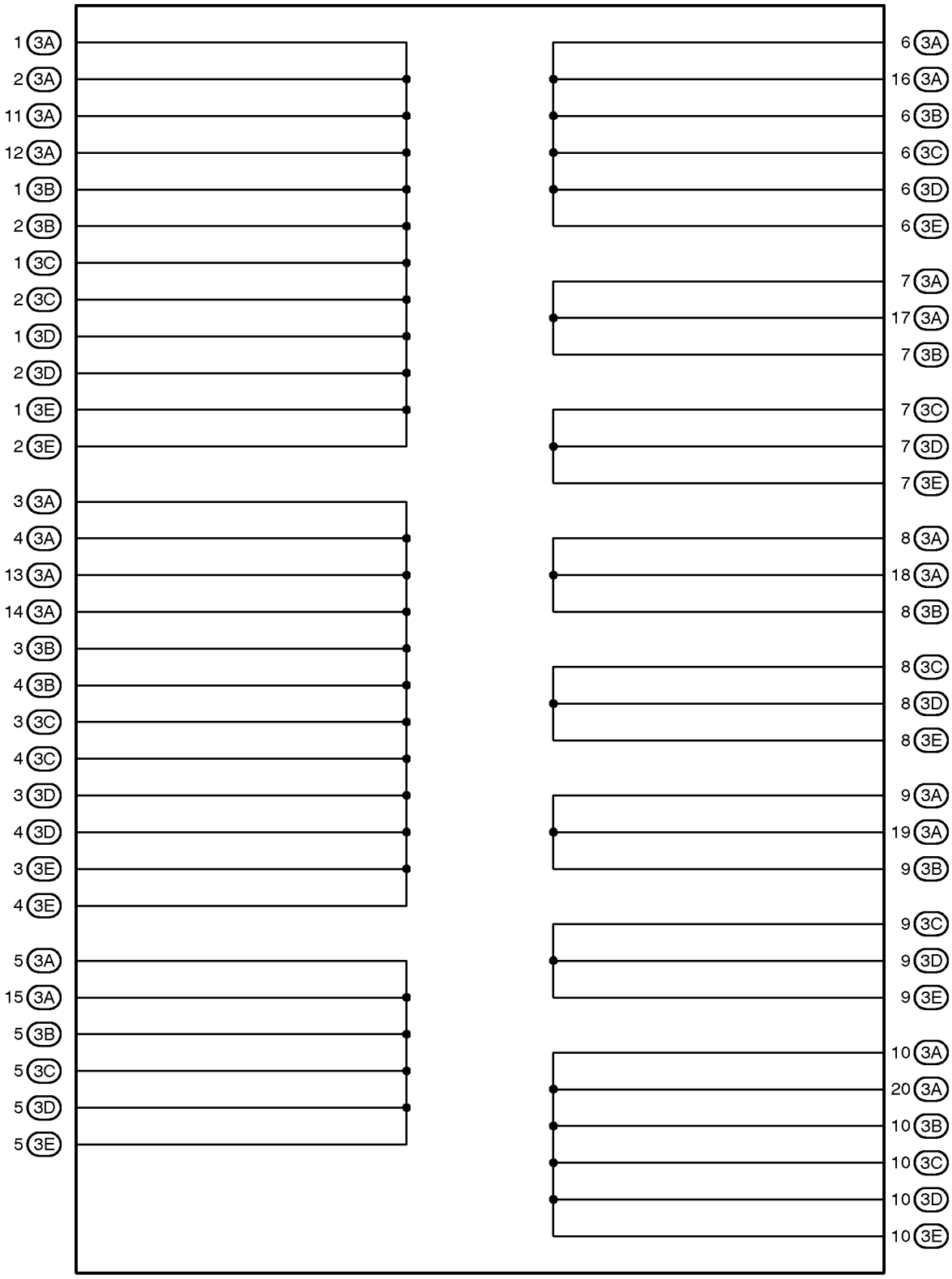

Position of Parts in Engine Compartment

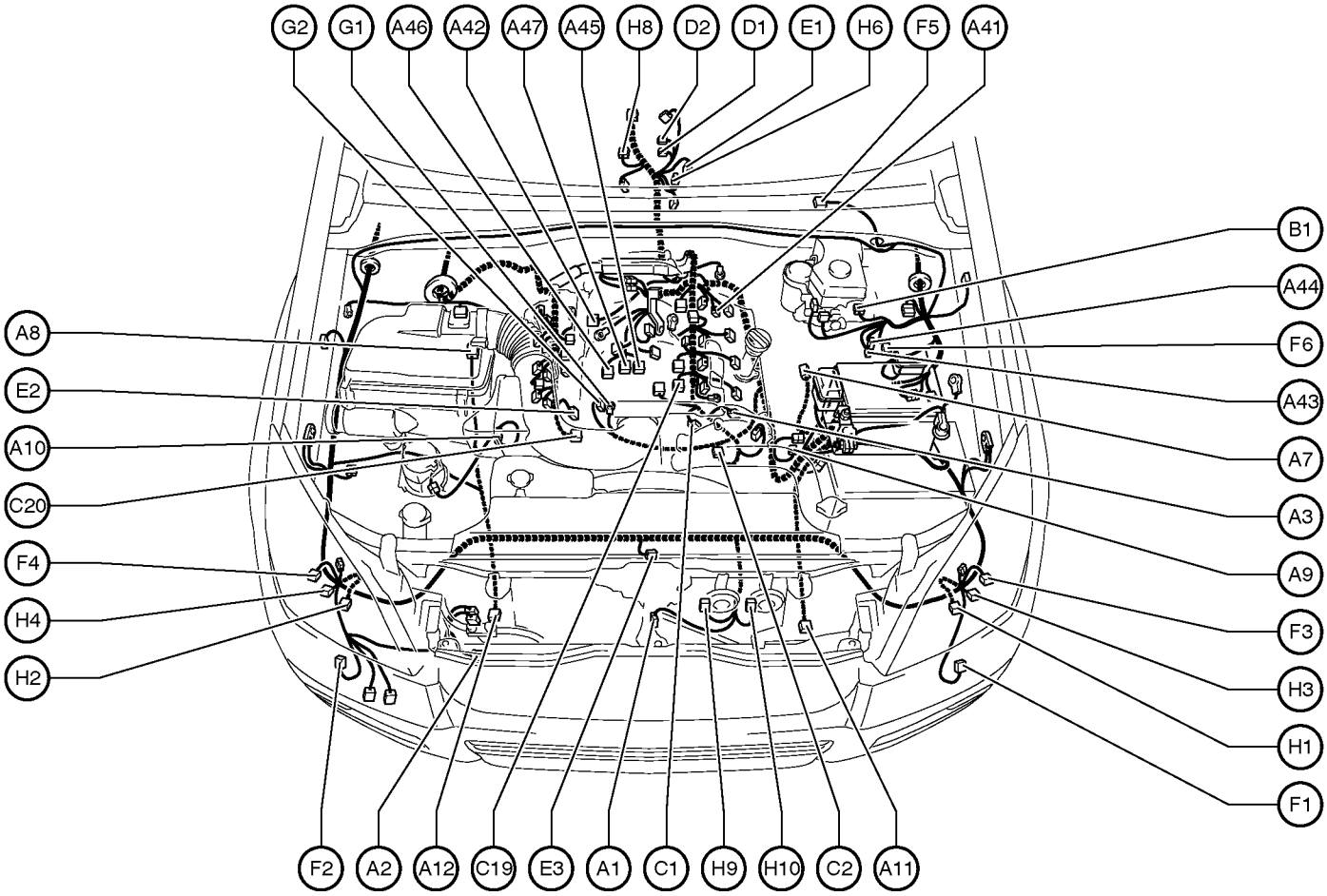

A 1 A/C Ambient Temp. Sensor
A 2 A/C Condenser Fan Motor
A 3 A/C Lock Sensor
A/C Magnetic Clutch
A 7 ABS Speed Sensor Front LH
A 8 ABS Speed Sensor Front RH
A 9 Absorber Control Actuator Front LH
A10 Absorber Control Actuator Front RH
A11 Airbag Sensor Front LH
A12 Airbag Sensor Front RH
A41 Air Fuel Ratio Sensor (Bank 1 Sensor 1)
A42 Air Fuel Ratio Sensor (Bank 2 Sensor 1)
A43 Air Injection Control Driver
A44 Air Injection Control Driver
A45 Air Pressure Sensor
A46 Air Pump
A47 Air Switching Valve

B 1 Brake Fluid Level Warning SW

C 1 Camshaft Position Sensor
C 2 Crankshaft Position Sensor
C19 Camshaft Timing Oil Control Valve LH
C20 Camshaft Timing Oil Control Valve RH

D 1 Detection SW (Transfer L4 Position)
D 2 Detection SW (Transfer Neutral Position)

E 1 Electronically Controlled Transmission Solenoid
E 2 Engine Coolant Temp. Sensor
E 3 Engine Hood Courtesy SW

F 1 Front Fog Light LH
F 2 Front Fog Light RH
F 3 Front Parking Light LH
Front Side Marker Light LH
Front Turn Signal Light LH
F 4 Front Parking Light RH
Front Side Marker Light RH
Front Turn Signal Light RH
F 5 Front Wiper Motor
F 6 Fuel Pump Resistor

G 1 Generator
G 2 Generator

H 1 Headlight High LH
H 2 Headlight High RH
H 3 Headlight Low LH
H 4 Headlight Low RH
H 6 Heated Oxygen Sensor (Bank 1 Sensor 2)
H 8 Heated Oxygen Sensor (Bank 2 Sensor 2)
H 9 Horn (High)
H10 Horn (Low)

Position of Parts in Engine Compartment

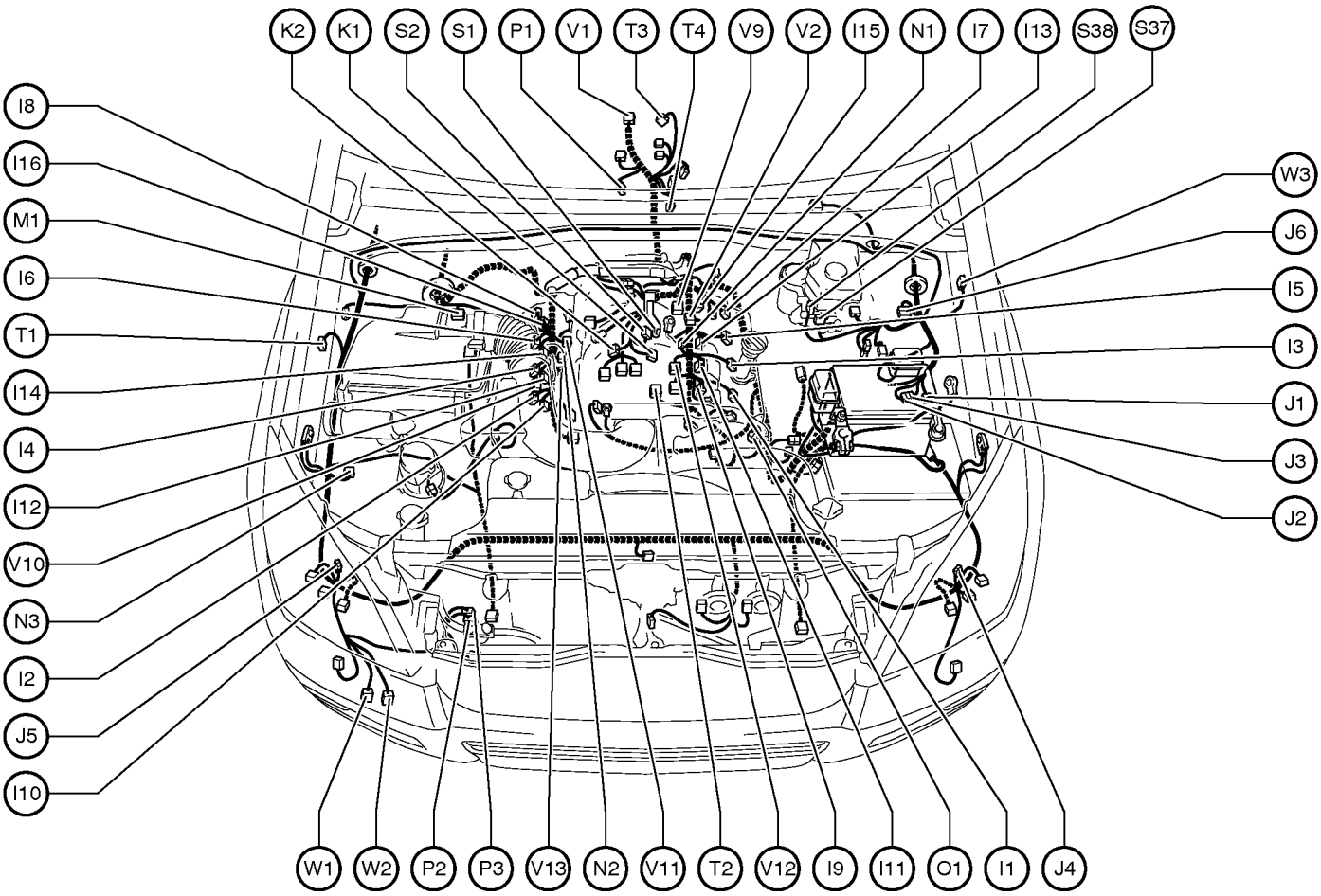

I 1 Ignition Coil and Igniter No.1
I 2 Ignition Coil and Igniter No.2
I 3 Ignition Coil and Igniter No.3
I 4 Ignition Coil and Igniter No.4
I 5 Ignition Coil and Igniter No.5
I 6 Ignition Coil and Igniter No.6
I 7 Ignition Coil and Igniter No.7
I 8 Ignition Coil and Igniter No.8
I 9 Injector No.1
I 10 Injector No.2
I 11 Injector No.3
I 12 Injector No.4
I 13 Injector No.5
I 14 Injector No.6
I 15 Injector No.7
I 16 Injector No.8

J 1 Junction Connector
J 2 Junction Connector
J 3 Junction Connector
J 4 Junction Connector
J 5 Junction Connector
J 6 Junction Connector

K 1 Knock Sensor (Bank 1)
K 2 Knock Sensor (Bank 2)

M 1 Mass Air Flow Meter

N 1 Noise Filter No.1
N 2 Noise Filter No.2
N 3 Noise Filter (Condenser Fan)

O 1 Oil Pressure SW

P 1 Park/Neutral Position SW
P 2 Pressure SW
P 3 Pressure SW

S 1 Starter
S 2 Starter
S 37 Skid Control ECU with Actuator
S 38 Skid Control ECU with Actuator

T 1 Theft Deterrent Horn
T 2 Throttle Control Motor
Throttle Position Sensor
T 3 Transfer Actuator
T 4 Turbine Speed Sensor

V 1 Vehicle Speed Sensor
(Electronically Controlled Transmission)
V 2 VSV (EVAP)
V 9 VSV (ACIS)
V 10 VSV (Air Switching Valve Bank 1)
V 11 VSV (Air Switching Valve Bank 2)
V 12 VVT Sensor LH
V 13 VVT Sensor RH

W 1 Washer Level Sensor
W 2 Washer Motor
W 3 Wireless Door Lock Buzzer

Position of Parts in Instrument Panel

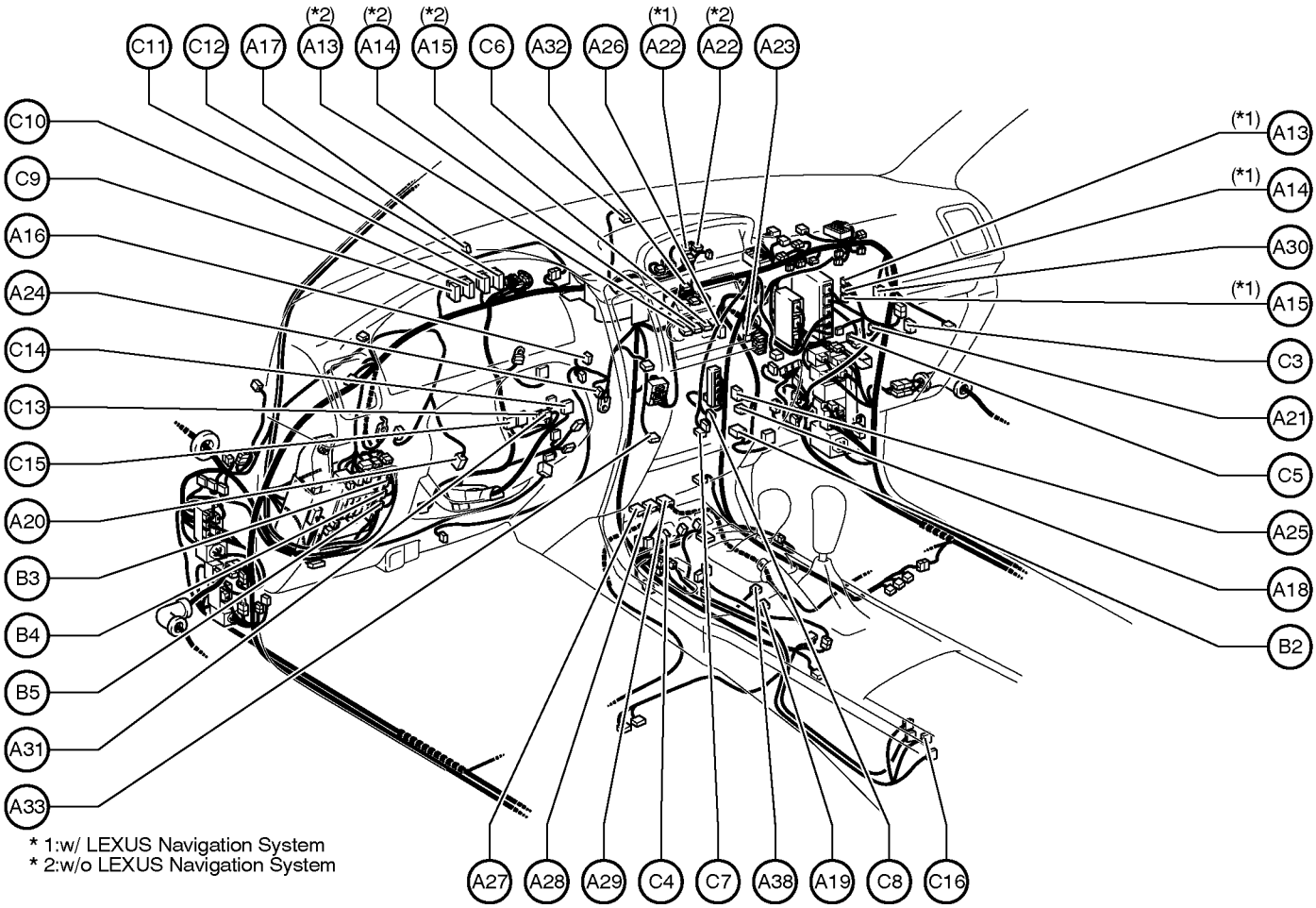

A13 A/C Control Assembly (w/o LEXUS Navigation System)
A/C ECU (w/ LEXUS Navigation System)
A14 A/C Control Assembly (w/o LEXUS Navigation System)
A/C ECU (w/ LEXUS Navigation System)
A15 A/C Control Assembly (w/o LEXUS Navigation System)
A/C ECU (w/ LEXUS Navigation System)
A16 A/C Room Temp. Sensor
A17 A/C Solar Sensor
Automatic Light Control Sensor
A18 A/C Thermistor
A19 A/T Shift Indicator
A20 Accel Position Sensor
A21 Acceleration Control Sensor Front
A22 Accessory Meter
A23 Air Inlet Control Servo Motor
A24 Air Mix Control Servo Motor LH
A25 Air Mix Control Servo Motor RH
A26 Air Vent Mode Control Servo Motor
A27 Airbag Sensor Assembly
A28 Airbag Sensor Assembly
A29 Airbag Sensor Assembly
A30 Airbag Squib (Front Passenger Airbag Assembly)
A31 Airbag Squib (Steering Wheel Pad)
A32 Antenna Amplifier
A33 Ashtray Illumination
A38 Acceleration Sensor

B 2 Blower Motor Linear Controller
B 3 Body ECU
B 4 Body ECU
B 5 Body ECU

C 3 CD Automatic Changer
C 4 Center Diff. Lock Control SW
C 5 Center Diff. Lock ECU
C 6 Center Speaker
C 7 Cigarette Lighter
C 8 Cigarette Lighter Illumination
C 9 Combination Meter
C10 Combination Meter
C11 Combination Meter
C12 Combination Meter
C13 Combination SW
C14 Combination SW
C15 Combination SW
C16 Console Box Illumination

Position of Parts in Instrument Panel

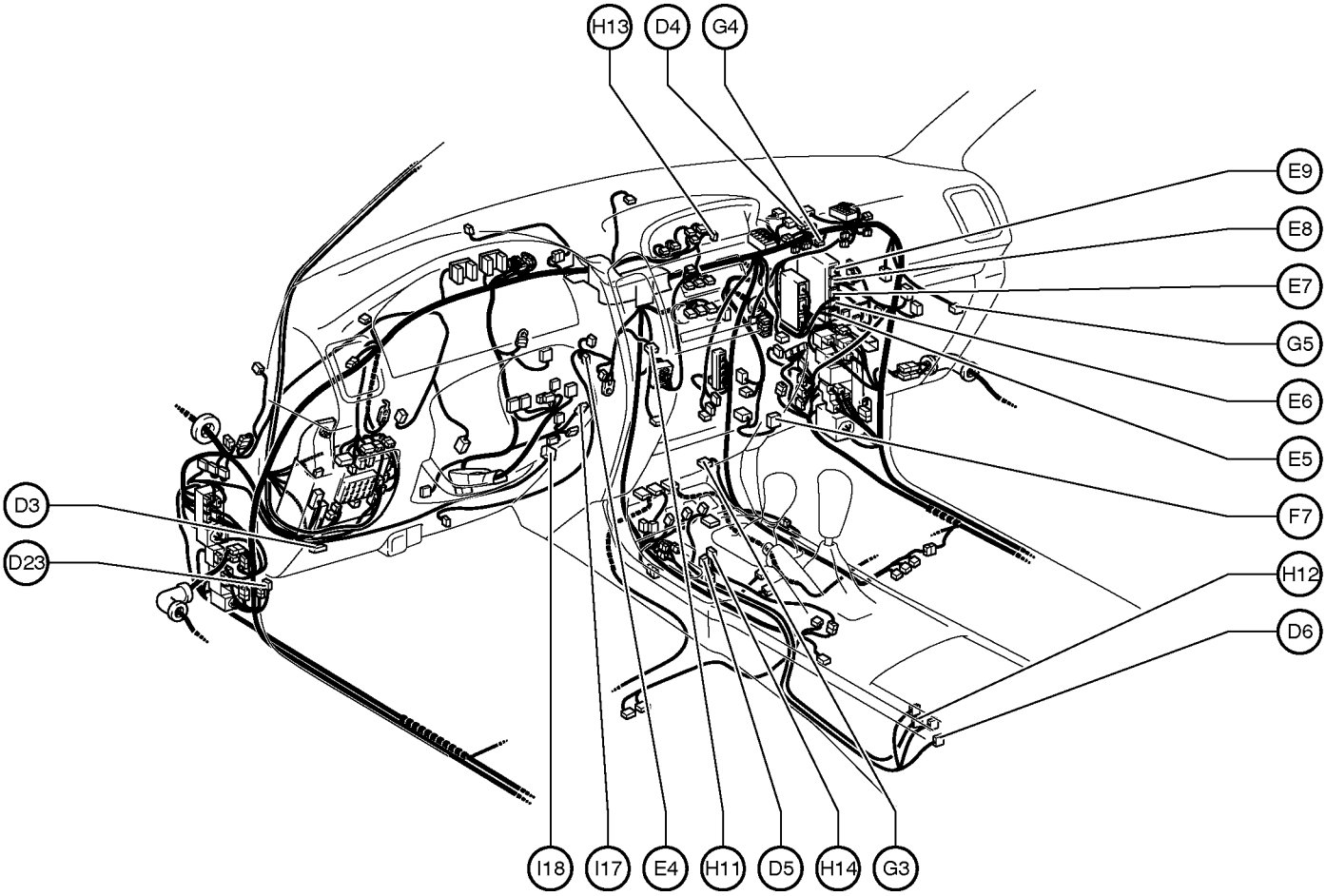

D 3 Data Link Connector3
D 4 Diode (Back–Up Light)
D 5 Downhill Assist Control SW
D 6 DVD Player
D23 Diode (Rear Interior Light)

E 4 Electronically Controlled Transmission Pattern Select SW
E 5 Engine Control Module
E 6 Engine Control Module
E 7 Engine Control Module
E 8 Engine Control Module
E 9 Engine Control Module

F 7 Front Blower Motor

G 3 Gateway ECU
G 4 Glove Box Light
G 5 Glove Box Light SW

H 11 Hazard SW
H12 Headphone Terminal
Video Terminal
H13 Heater Control SW
H14 Height Control and Suspension SW

I 17 Ignition Key Cylinder Light
Transponder Key Amplifier
I 18 Ignition SW

Position of Parts in Instrument Panel

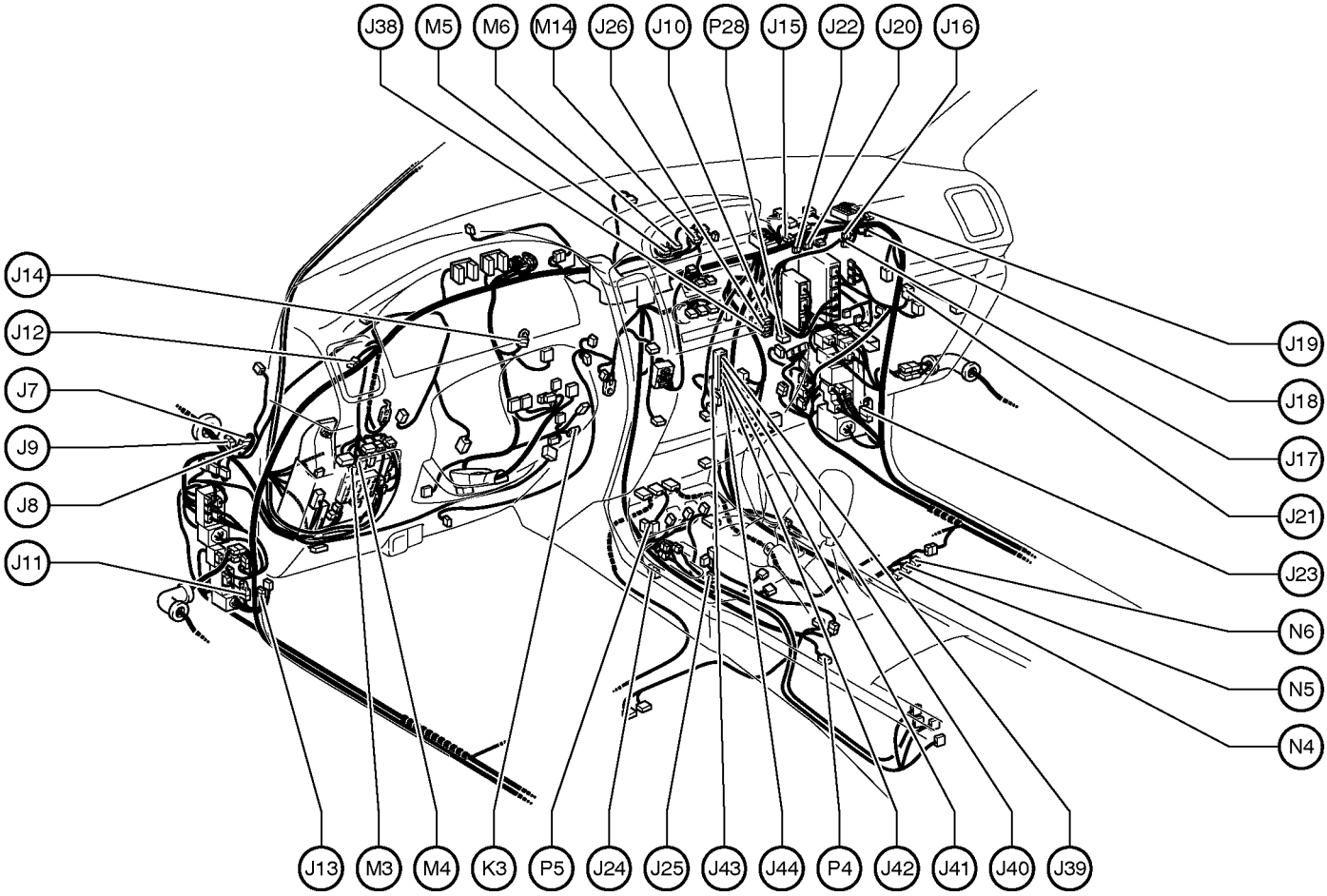

J 7 Junction Connector
J 8 Junction Connector
J 9 Junction Connector
J 10 Junction Connector
J 11 Junction Connector
J 12 Junction Connector
J 13 Junction Connector
J 14 Junction Connector
J 15 Junction Connector
J 16 Junction Connector
J 17 Junction Connector
J 18 Junction Connector
J 19 Junction Connector
J 20 Junction Connector
J 21 Junction Connector
J 22 Junction Connector
J 23 Junction Connector
J 24 Junction Connector
J 25 Junction Connector
J 26 Junction Connector
J 38 Junction Connector
J 39 Junction Connector
J 40 Junction Connector
J 41 Junction Connector
J 42 Junction Connector
J 43 Junction Connector
J 44 Junction Connector

K 3 Key Interlock Solenoid
Unlock Warning SW

M 3 Main SW
M 4 Mirror Heater SW
M 5 Multi–Display
M 6 Multi–Display
M14 Multi–Display

N 4 Navigation ECU
N 5 Navigation ECU
N 6 Navigation ECU

P 4 Parking Brake SW
P 5 Power Outlet (Front)
P 28 Passenger Airbag ON–OFF Indicator
Passenger Seat Belt Warning Light

Position of Parts in Instrument Panel

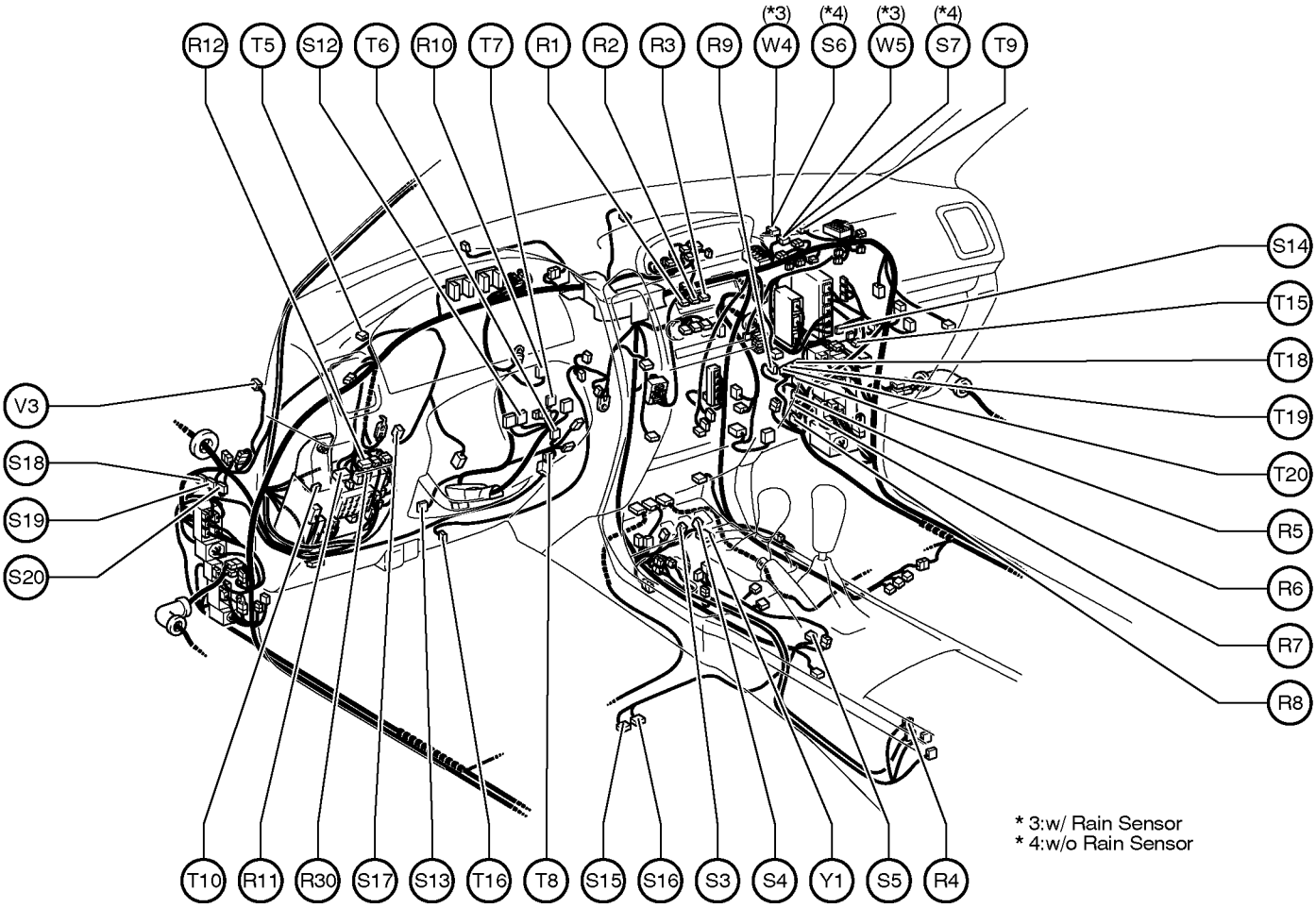

R 1 Radio and Player
R 2 Radio and Player
R 3 Radio and Player
R 4 Rear Cooler SW
R 5 Rear Seat Entertainment ECU
R 6 Rear Seat Entertainment ECU
R 7 Rear Seat Entertainment ECU
R 8 Rear Seat Entertainment ECU
R 9 Rear Seat Entertainment ECU
R10 Remote Control Mirror ECU
R11 Remote Control Mirror SW
R12 Rheostat
R30 Roll Sensing Curtain Shield Airbag Cut Off SW

S 3 Seat Heater SW Front LH
S 4 Seat Heater SW Front RH
S 5 Shift Lock Control ECU
Transmission Control SW
S 6 Short Pin
S 7 Short Pin
S12 Steering Sensor
S13 Step Light LH
S14 Step Light RH
S15 Stereo Component Amplifier
S16 Stereo Component Amplifier
S17 Stop Light SW
S18 Suspension Control ECU
S19 Suspension Control ECU
S20 Suspension Control ECU

T 5 Theft Deterrent ECU
T 6 Tilt and Telescopic ECU
T 7 Tilt Motor
T 8 Towing Brake Controller
T 9 Transponder Key Computer
T10 Turn Signal Flasher
T15 Tire Pressure Monitor ECU
T16 Tire Select SW
T18 Television Camera ECU
T19 Television Camera ECU
T20 Television Camera ECU

V 3 VSC Warning Buzzer

W 4 Wiper Relay
W 5 Wiper Relay

Y 1 Yaw Rate Sensor

Position of Parts in Body

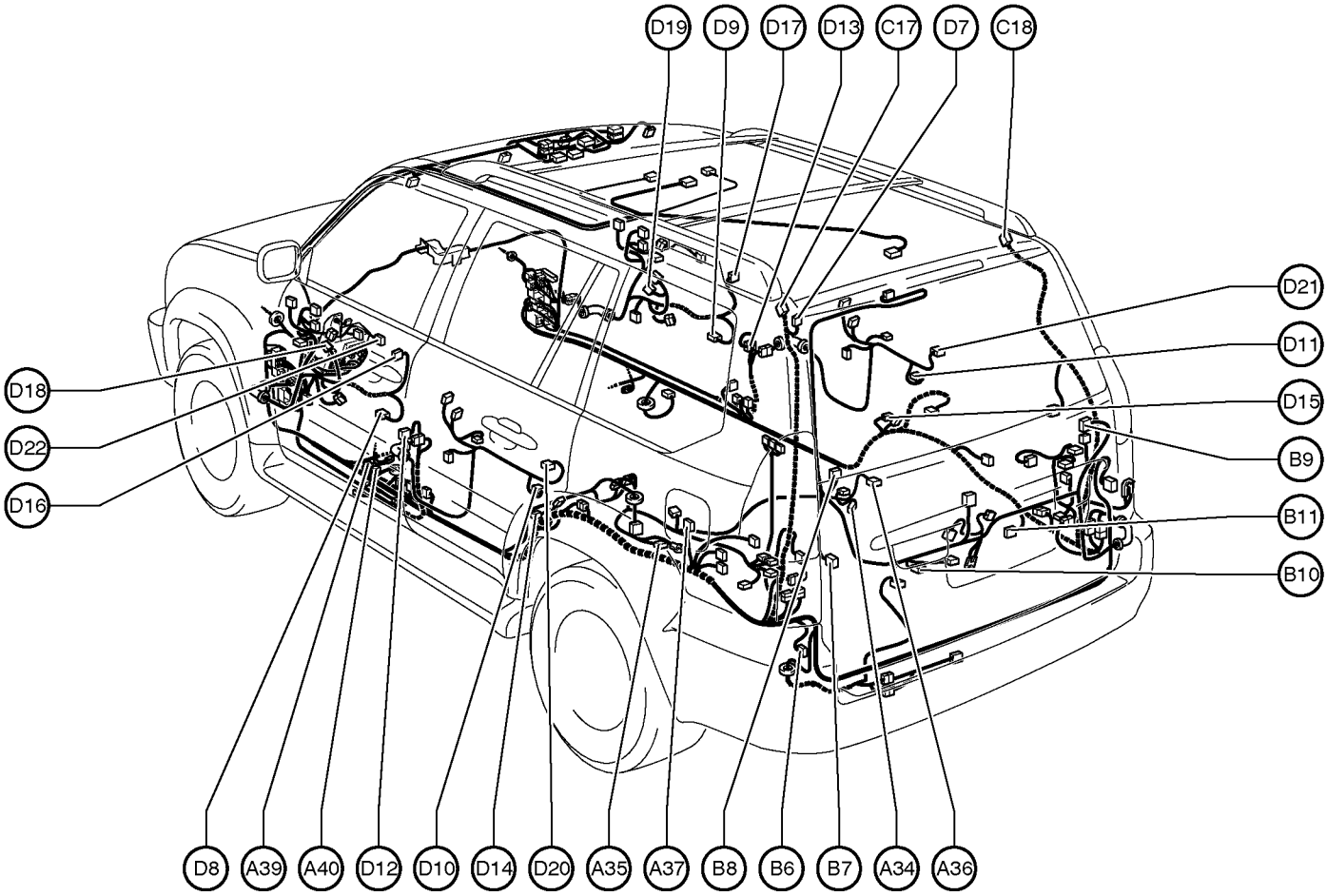

A34 ABS Speed Sensor Rear
A35 Absorber Control Actuator Rear LH
A36 Absorber Control Actuator Rear RH
A37 Acceleration Control Sensor Rear
A39 Accumulator Pressure Sensor No.1
A40 Accumulator Pressure Sensor No.2

B 6 Back Door Courtesy SW
B 7 Back Door Key Lock and Unlock SW
Back Door Lock Motor
Back Door Unlock Detection SW
B 8 Back Door Speaker LH
B 9 Back Door Speaker RH
B10 Back–Up Light LH
B11 Back–Up Light RH

C17 Curtain Shield Airbag Squib LH
C18 Curtain Shield Airbag Squib RH

D 7 Door Control Receiver
D 8 Door Courtesy Light Front LH
D 9 Door Courtesy Light Front RH
D10 Door Courtesy Light Rear LH
D11 Door Courtesy Light Rear RH
D12 Door Courtesy SW Front LH
D13 Door Courtesy SW Front RH
D14 Door Courtesy SW Rear LH
D15 Door Courtesy SW Rear RH
D16 Door Key Lock and Unlock SW Front LH
Door Lock Motor Front LH
Door Unlock Detection SW Front LH
D17 Door Key Lock and Unlock SW Front RH
Door Lock Motor Front RH
Door Unlock Detection SW Front RH
D18 Door Lock Control SW LH
Power Window Master SW
D19 Door Lock Control SW RH
D20 Door Lock Motor Rear LH
Door Unlock Detection SW Rear LH
D21 Door Lock Motor Rear RH
Door Unlock Detection SW Rear RH
D22 Driving Position Memory SW

Position of Parts in Body

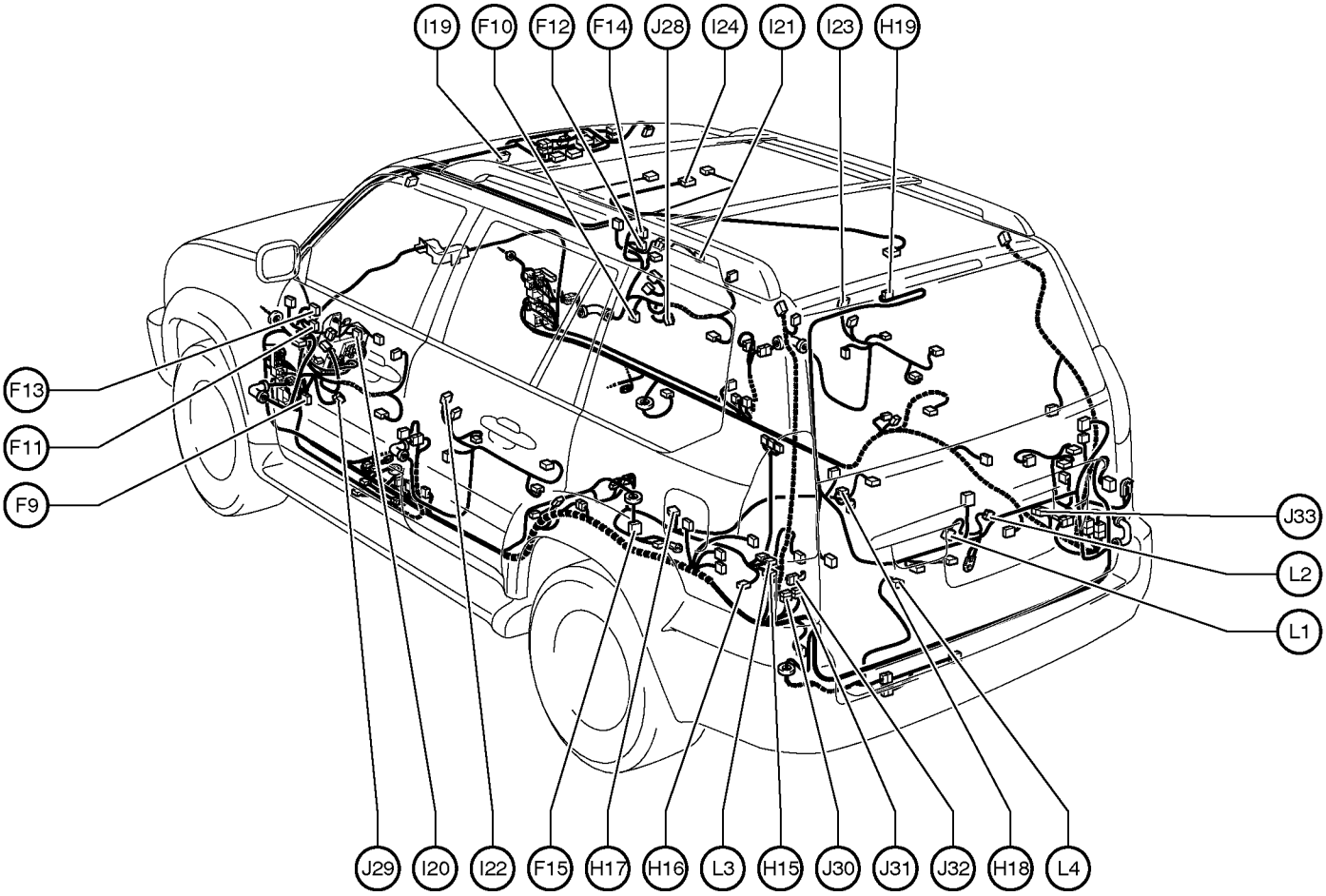

F 9 Front Door Speaker LH
F 10 Front Door Speaker RH
F 11 Front Door Squawker LH
F 12 Front Door Squawker RH
F 13 Front Door Tweeter Speaker LH
F 14 Front Door Tweeter Speaker RH
F 15 Fuel Pump
Fuel Sender

H15 Height Control Compressor
H16 Height Control Exhaust Valve
H17 Height Control Sensor Rear LH
H18 Height Control Sensor Rear RH
H19 High Mounted Stop Light

I 19 Inner Mirror
I 20 Inside Handle Illumination Front LH
I 21 Inside Handle Illumination Front RH
I 22 Inside Handle Illumination Rear LH
I 23 Inside Handle Illumination Rear RH
I 24 Interior Light

J 28 Junction Connector
J 29 Junction Connector
J 30 Junction Connector
J 31 Junction Connector
J 32 Junction Connector
J 33 Junction Connector

L 1 License Plate Light LH
L 2 License Plate Light RH
L 3 Low Pressure Tank Valve
L 4 Leak Detection Pump Assembly

Position of Parts in Body

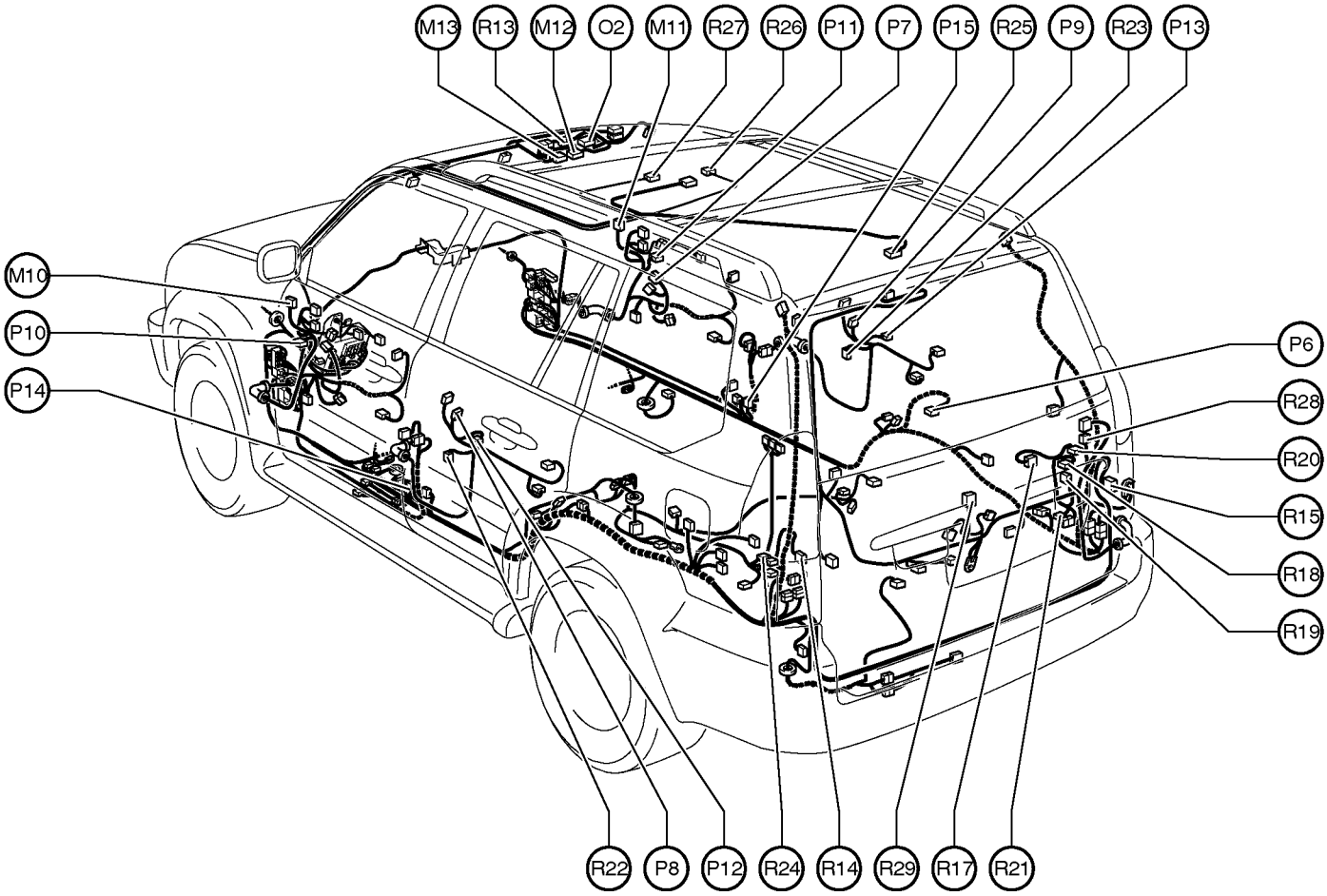

M10 Mirror Heater LH
Remote Control Mirror LH
M11 Mirror Heater RH
Remote Control Mirror RH
M12 Moon Roof Control ECU and Motor
M13 Coin Box Illumination
Moon Roof Control SW
Personal Light

O 2 Overhead J/B

P 6 Power Outlet (115V)
P 7 Power Window Control SW Front RH
P 8 Power Window Control SW Rear LH
P 9 Power Window Control SW Rear RH
P 10 Power Window Motor Front LH
P 11 Power Window Motor Front RH
P 12 Power Window Motor Rear LH
P 13 Power Window Motor Rear RH
P 14 Pretensioner LH
P 15 Pretensioner RH

R 13 Rain Sensor
R 14 Rear Combination Light LH
R 15 Rear Combination Light RH
R 17 Rear Cooler Blower Motor
R 18 Rear Cooler Magnetic Valve
R 19 Rear Cooler Power Transistor
R 20 Rear Cooler Relay
R 21 Rear Cooler Thermistor
R 22 Rear Door Speaker LH
R 23 Rear Door Speaker RH
R 24 Rear Height Control Valve
R 25 Rear Interior Light
R 26 Rear Seat Audio Controller
R 27 Rear Seat Entertainment Display
R 28 Rear Window Defogger
R 29 Rear Wiper Motor

Position of Parts in Body

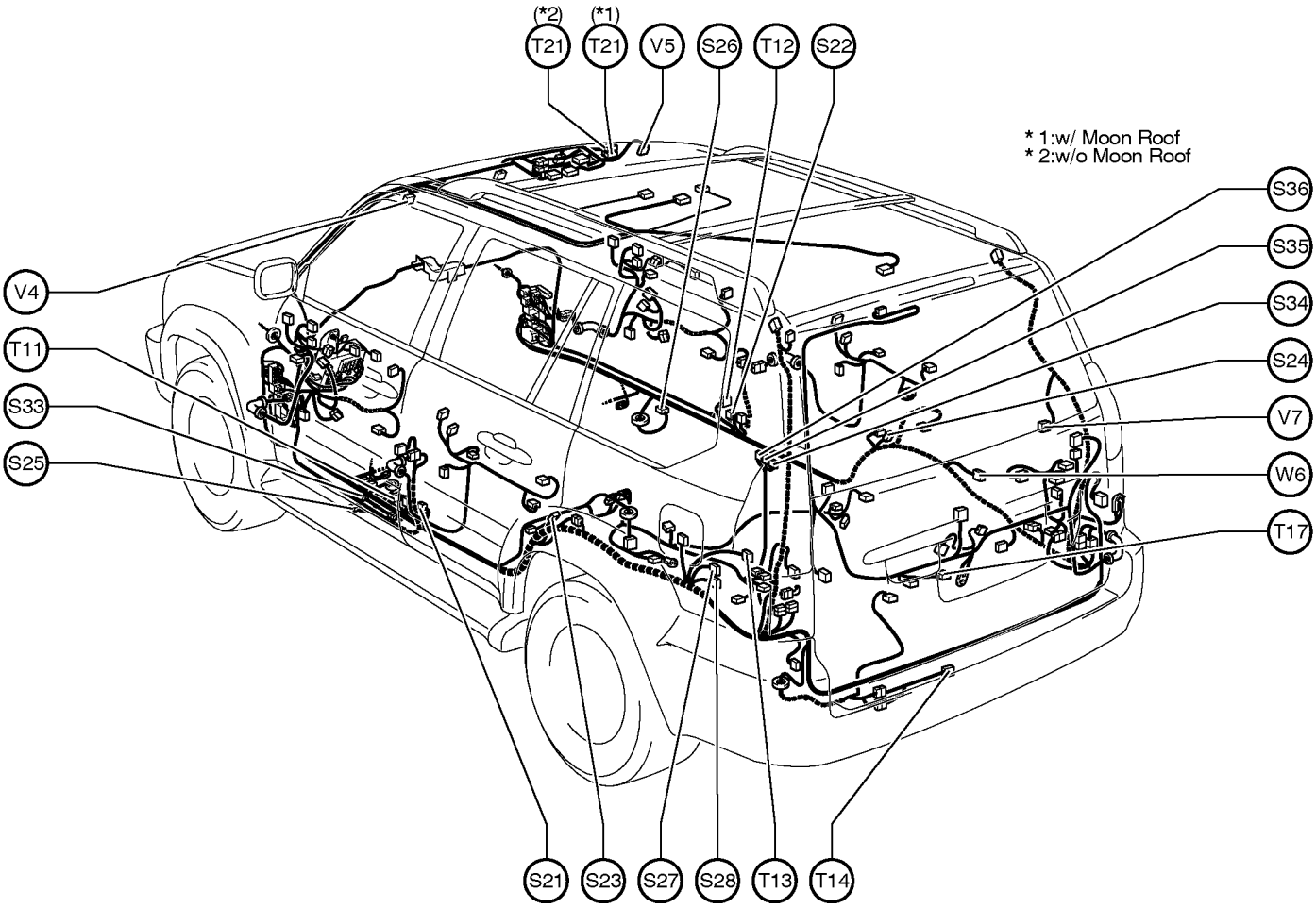

S21 Side Airbag Sensor Front LH
S22 Side Airbag Sensor Front RH
S23 Side Airbag Sensor Rear LH
S24 Side Airbag Sensor Rear RH
S25 Side Step Light LH
S26 Side Step Light RH
S27 Sub Body ECU
S28 Sub Body ECU
S33 Stabilizer Control Valve
S34 Stabilizer Control ECU
S35 Stabilizer Control ECU
S36 Stabilizer Control ECU

T 11 Tension Reducer Solenoid LH
T 12 Tension Reducer Solenoid RH
T 13 Towing Converter Relay
T 14 Trailer Socket
T 17 Television Camera
T 21 Tire Pressure Receiver

V 4 Vanity Light LH
V 5 Vanity Light RH
V 7 Voltage Inverter

W 6 Woofer Speaker

Position of Parts in Seat

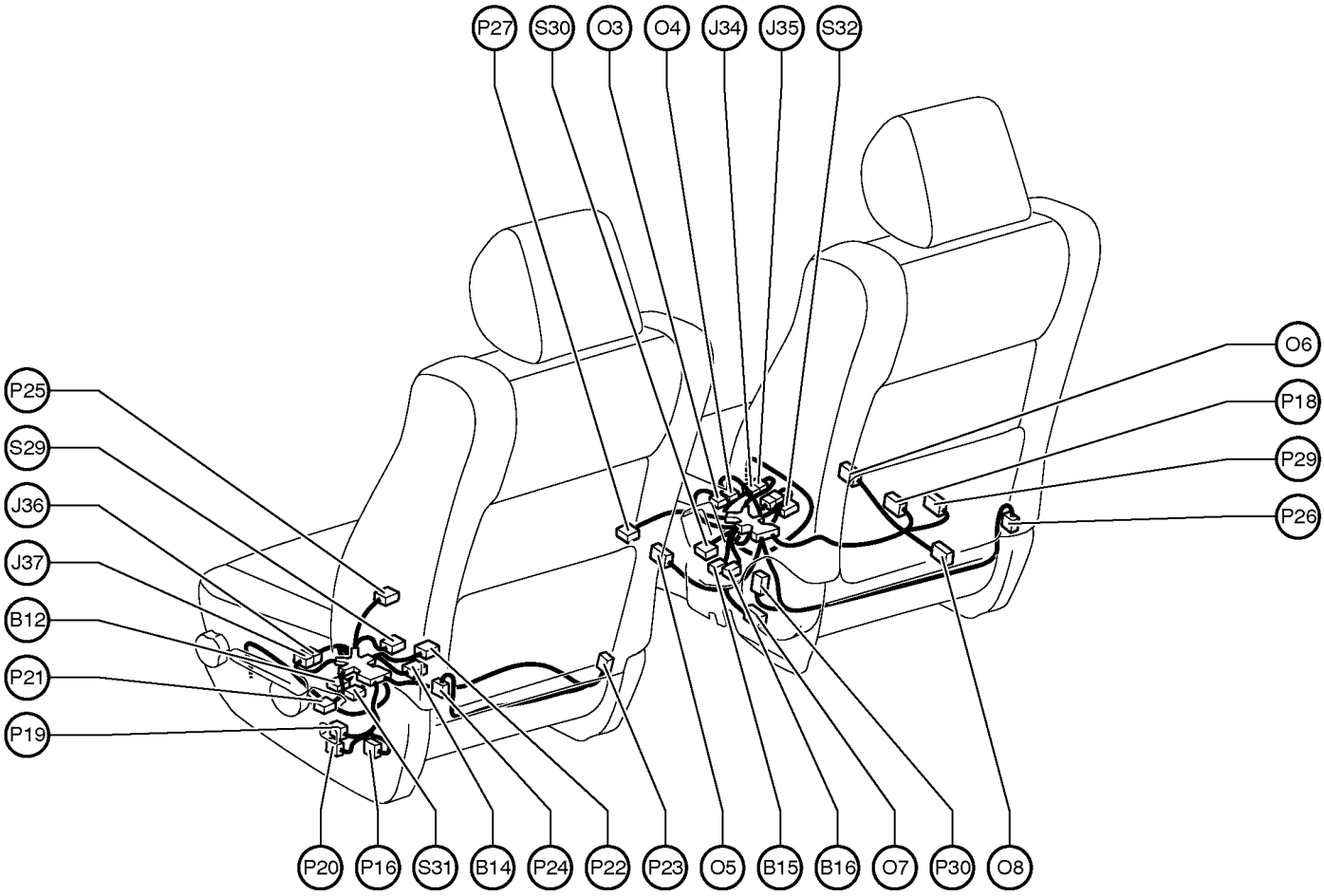

B 12 Buckle SW LH
Seat Position Sensor
B 14 Buckle SW LH
B 15 Buckle SW RH
B 16 Buckle SW RH

J 34 Junction Connector
J 35 Junction Connector
J 36 Junction Connector
J 37 Junction Connector

O 3 Occupant Classification ECU
O 4 Occupant Classification ECU
O 5 Occupant Detection Sensor Front LH
O 6 Occupant Detection Sensor Front RH
O 7 Occupant Detection Sensor Rear LH
O 8 Occupant Detection Sensor Rear RH

P 16 Power Seat Control SW
(Driver's Seat Lumbar Support Control)
P 18 Power Seat Control SW (Front Passenger's Seat)
P 19 Power Seat ECU and SW
P 20 Power Seat ECU and SW
P 21 Power Seat Motor (Driver's Seat Front Vertical Control)
P 22 Power Seat Motor (Driver's Seat Lifter Control)
P 23 Power Seat Motor
(Driver's Seat Lumbar Support Control)
P 24 Power Seat Motor (Driver's Seat Reclining Control)
P 25 Power Seat Motor (Driver's Seat Slide Control)
P 26 Power Seat Motor
(Front Passenger's Seat Reclining Control)
P 27 Power Seat Motor
(Front Passenger's Seat Slide Control)
P 29 Power Seat Control SW
(Front Passenger's Seat Lumbar Support Control)
P 30 Power Seat Motor
(Front Passenger's Seat Lumbar Support Control)

S 29 Seat Heater (Driver's Seat)
S 30 Seat Heater (Front Passenger's Seat)
S 31 Side Airbag Squib LH
S 32 Side Airbag Squib RH

▭ : Location of Connector Joining Wire Harness and Wire Harness

▽ : Location of Ground Points

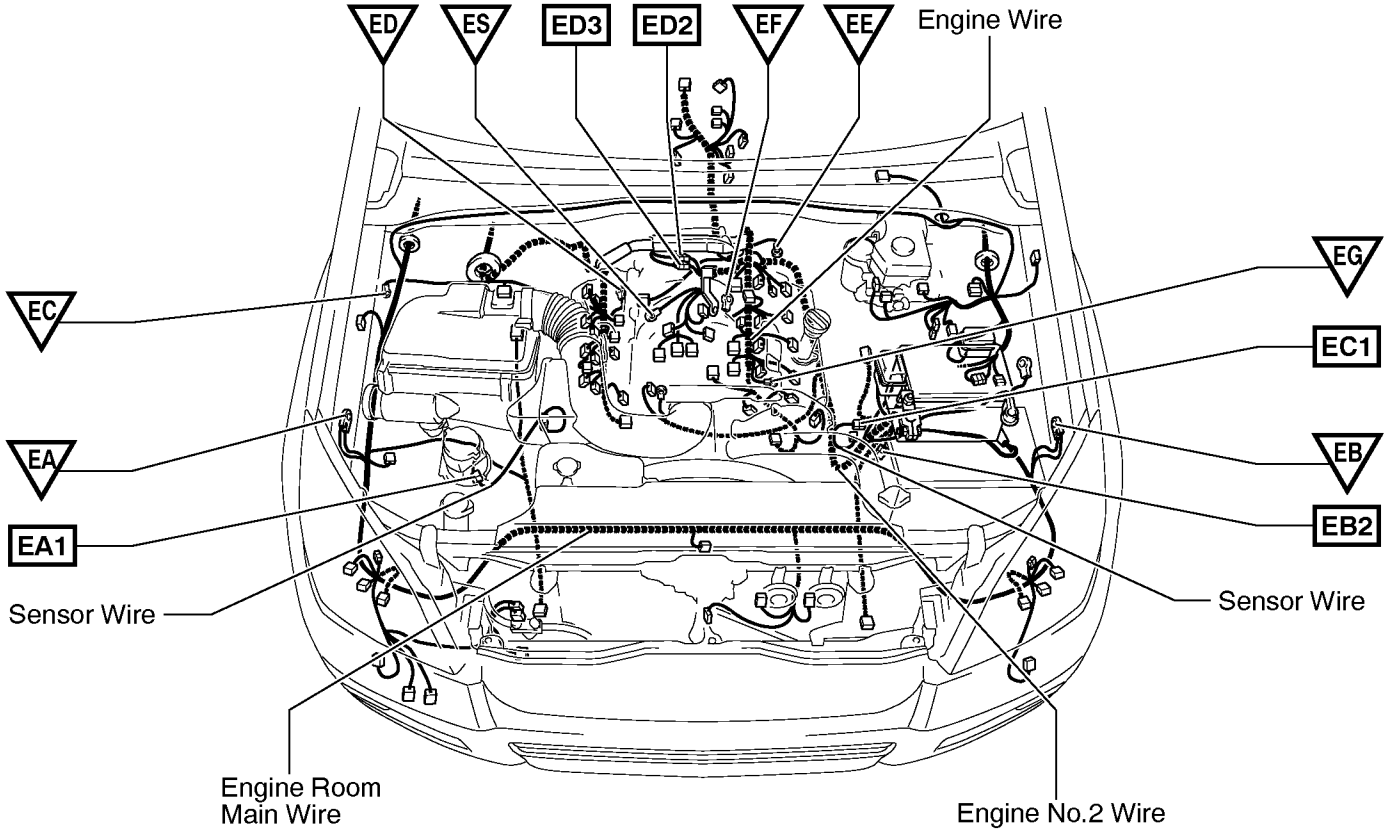

⬡ : Location of Splice Points

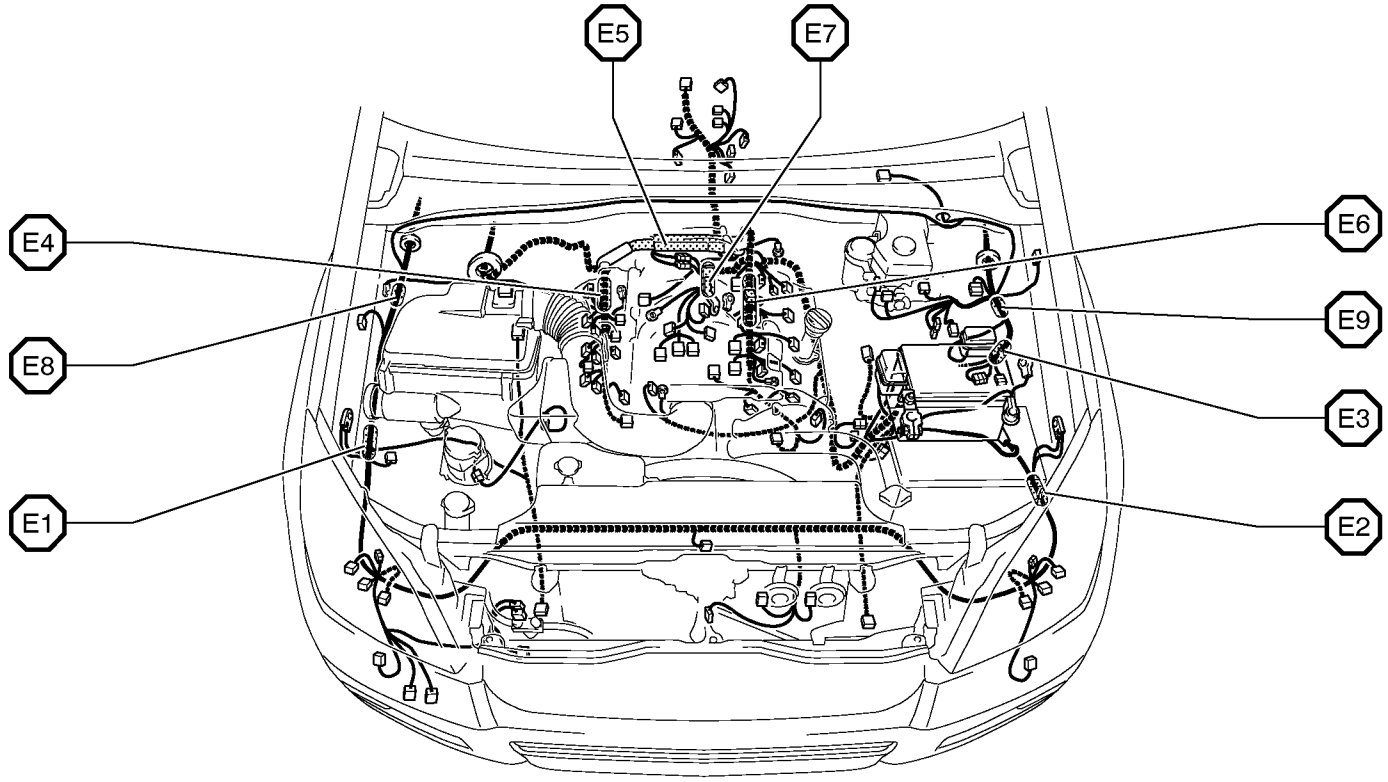

Connector Joining Wire Harness and Wire Harness

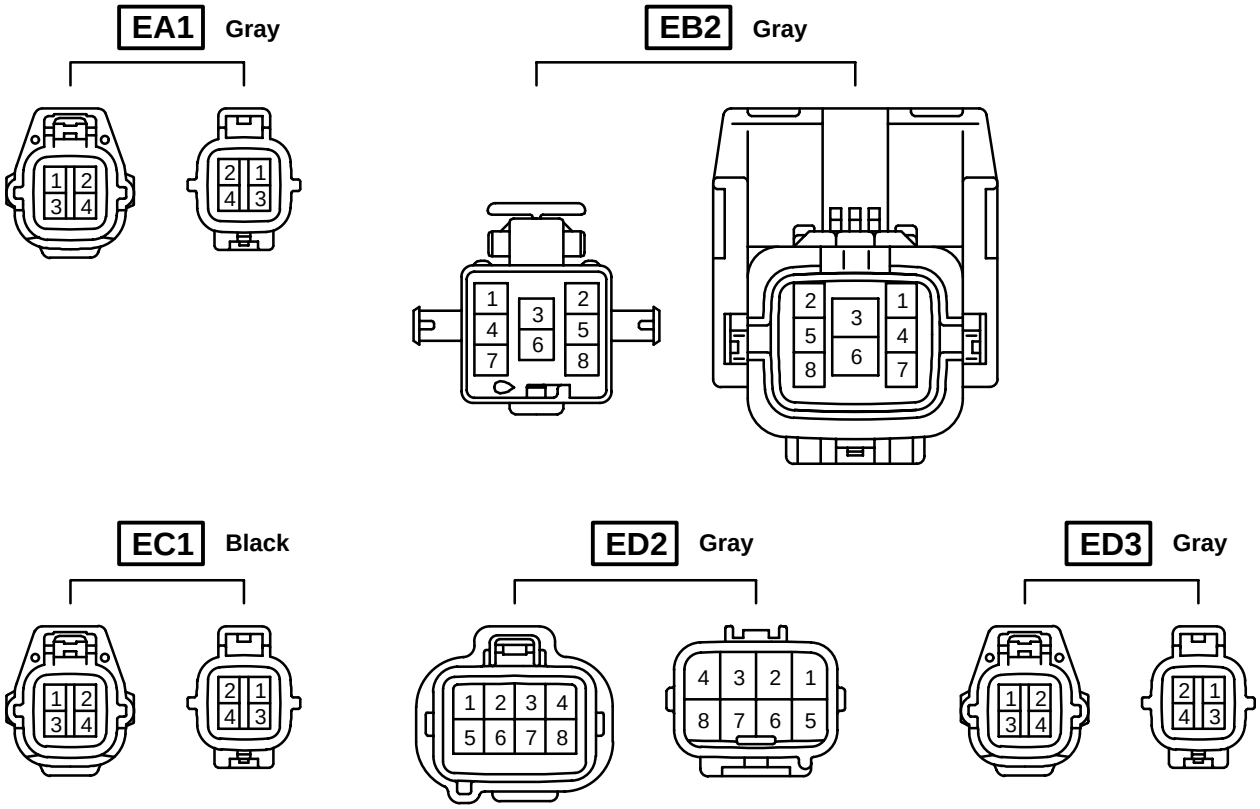

Code	Joining Wire Harness and Wire Harness (Connector Location)
EA1	Sensor Wire and Engine Room Main Wire (Near the Air Cleaner)
EB2	Engine No.2 Wire and Engine Room Main Wire (Near the Engine Room R/B)
EC1	Sensor Wire and Engine Room Main Wire (Near the Engine Room R/B)
ED2	Engine No.2 Wire and Engine Wire (Near the Starter)
ED3	

▭ : Location of Connector Joining Wire Harness and Wire Harness

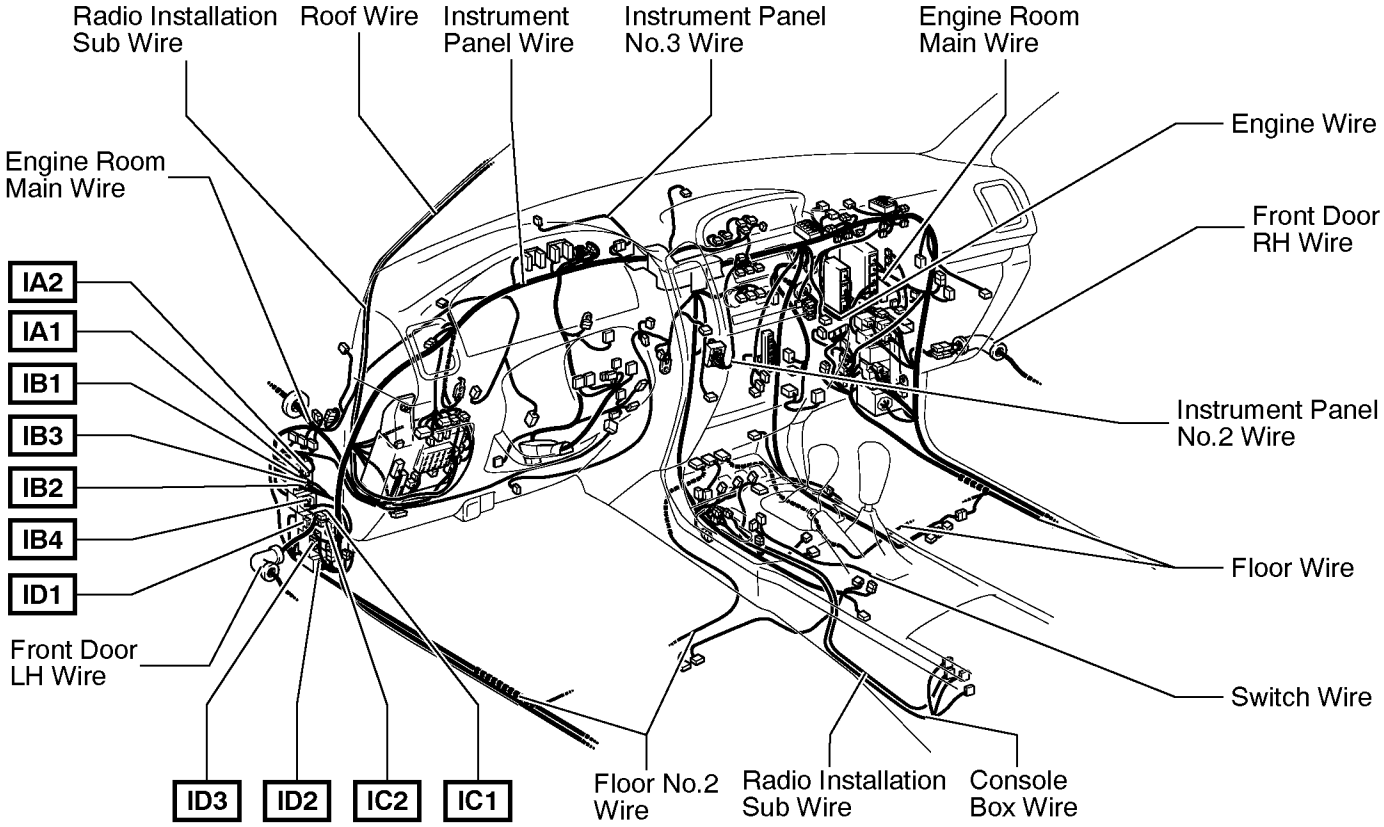

▽ : Location of Ground Points

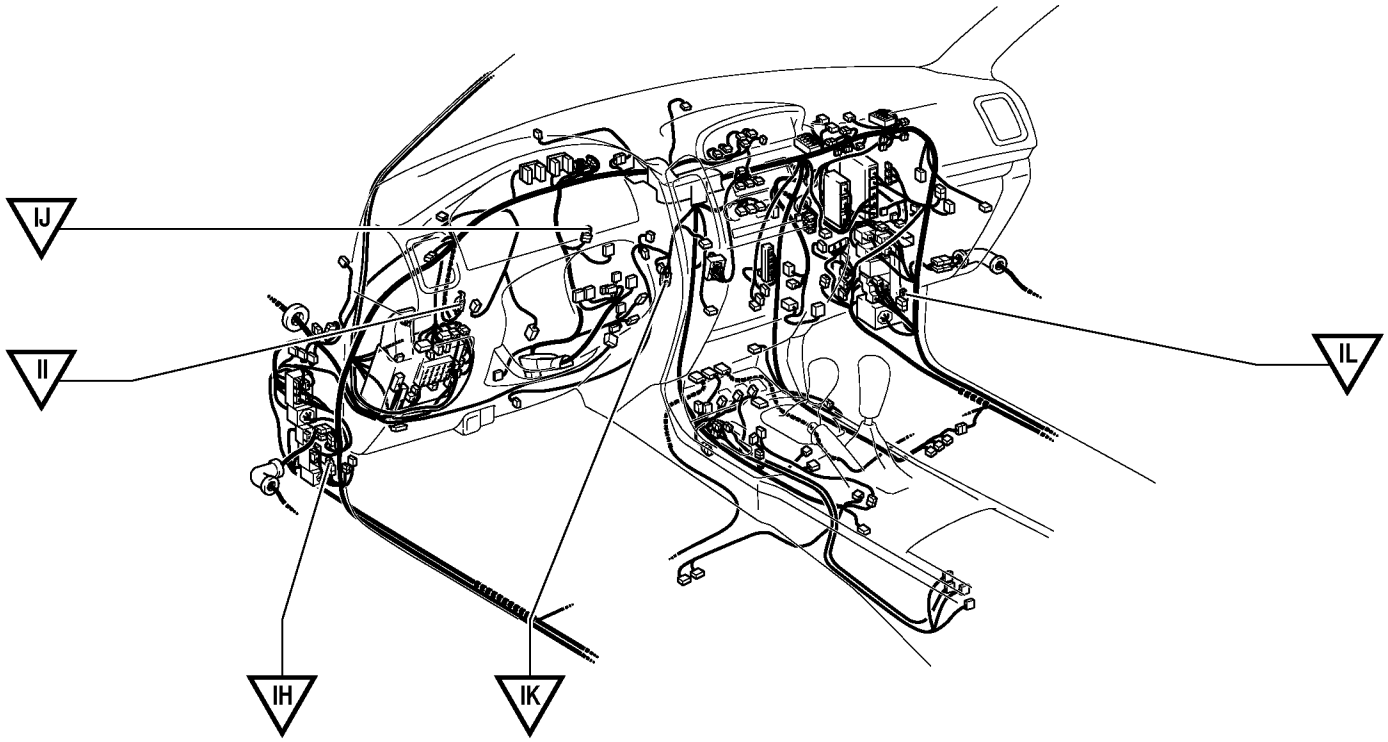

Connector Joining Wire Harness and Wire Harness

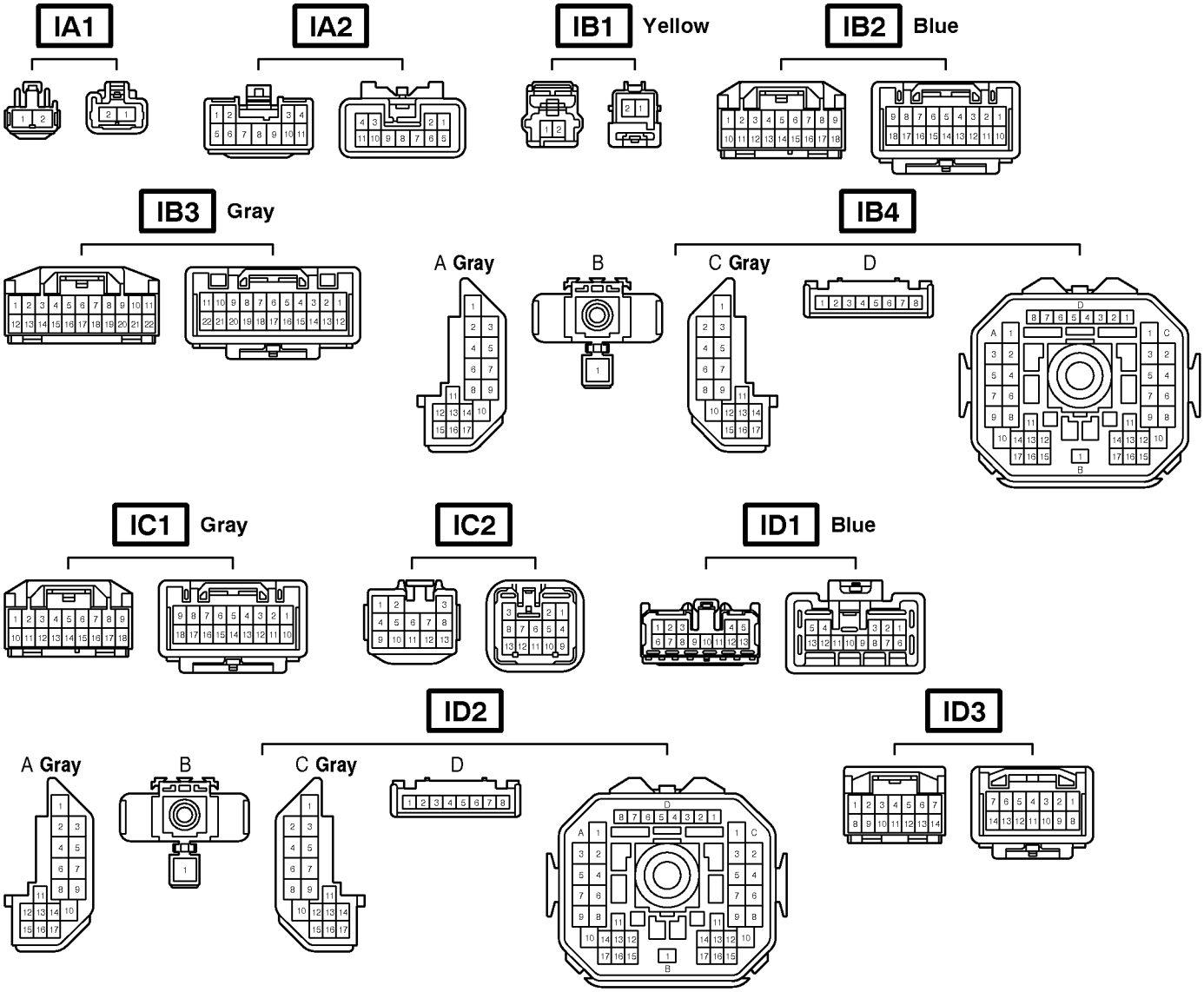

Code	Joining Wire Harness and Wire Harness (Connector Location)
IA1	Floor No.2 Wire and Engine Room Main Wire (Left Kick Panel)
IA2	
IB1	Instrument Panel Wire and Engine Room Main Wire (Left Kick Panel)
IB2	
IB3	
IB4	
IC1	Front Door LH Wire and Instrument Panel Wire (Left Kick Panel)
IC2	
ID1	Instrument Panel Wire and Floor No.2 Wire (Left Kick Panel)
ID2	
ID3	

▭ : Location of Connector Joining Wire Harness and Wire Harness

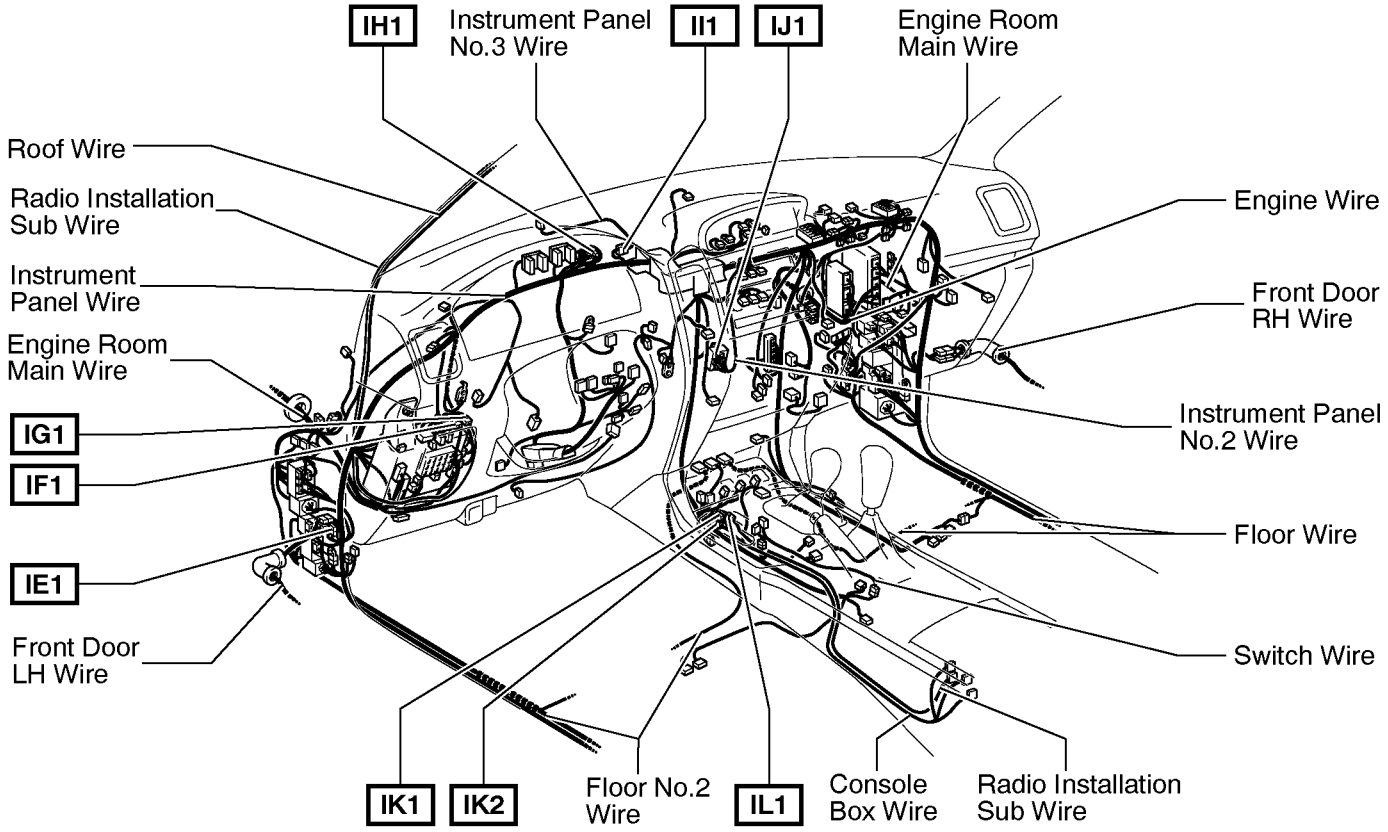

⬡ : Location of Splice Points

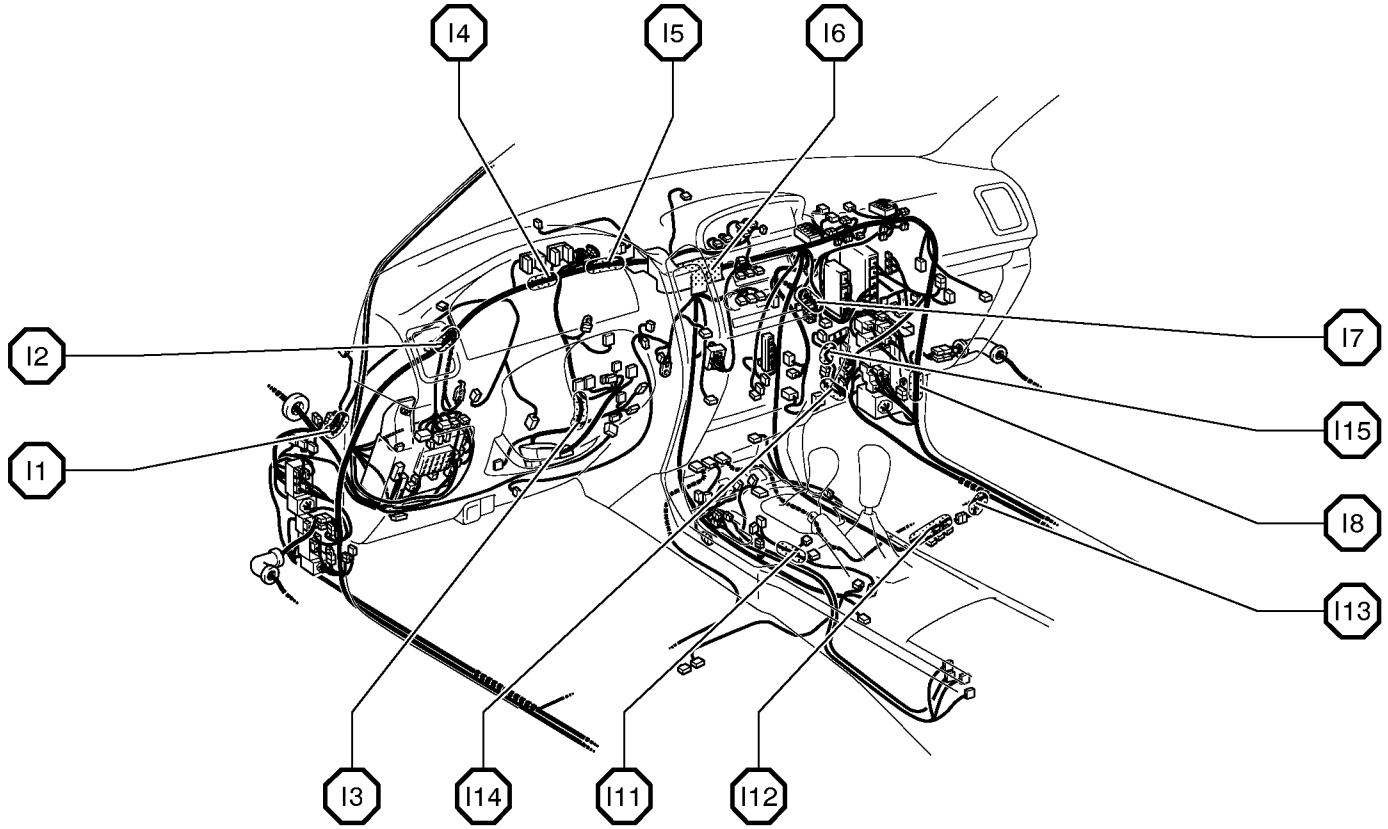

Connector Joining Wire Harness and Wire Harness

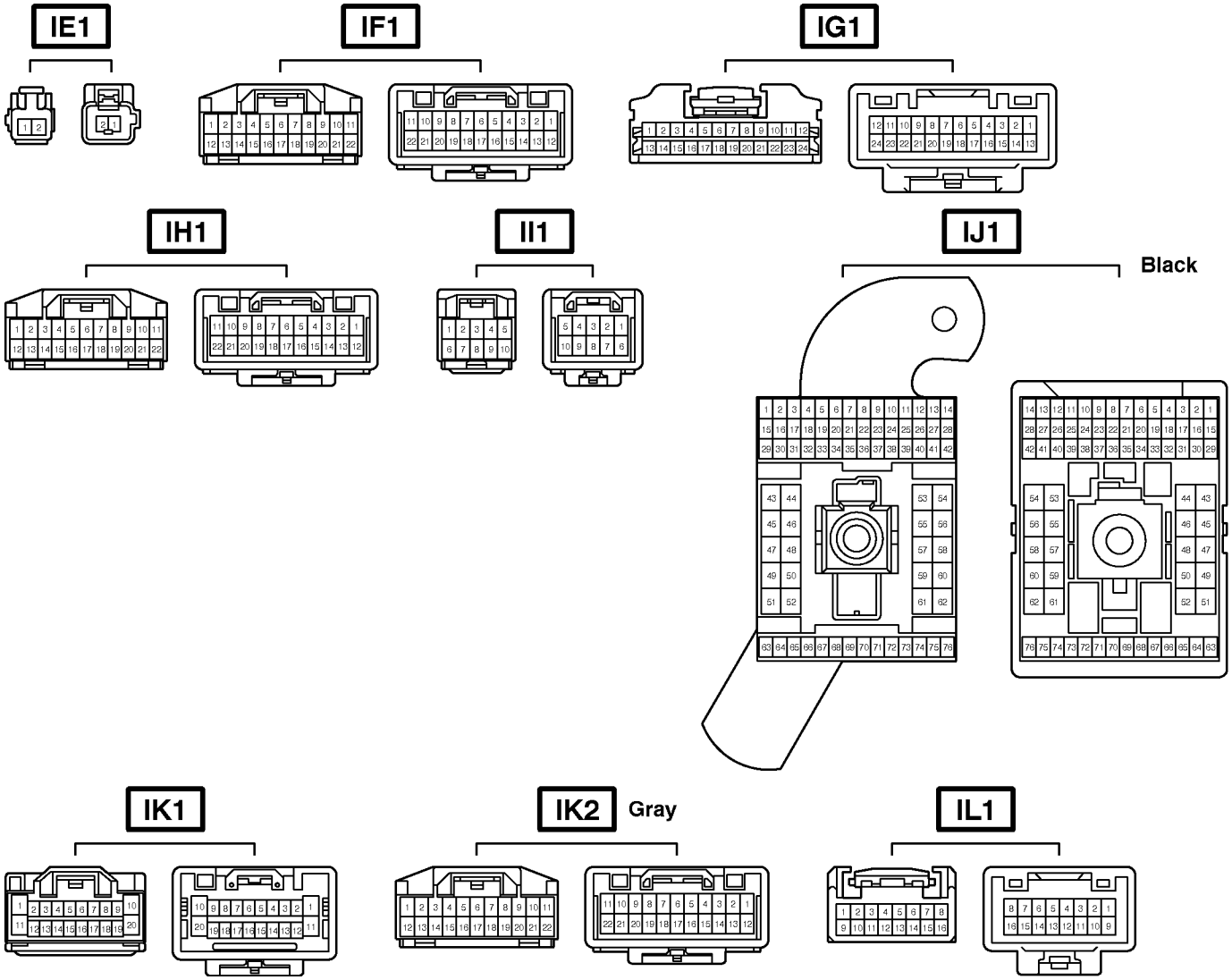

Code	Joining Wire Harness and Wire Harness (Connector Location)
IE1	Instrument Panel Wire and Instrument Panel Wire (Left Kick Panel)
IF1	Roof Wire and Instrument Panel Wire (Upper the Driver Side J/B)
IG1	Radio Installation Sub Wire and Instrument Panel Wire (Upper the Driver Side J/B)
IH1	Instrument Panel Wire and Instrument Panel Wire (Near the J/B No.1)
II1	Instrument Panel No.3 Wire and Instrument Panel Wire (Near the Combination Meter)
IJ1	Instrument Panel Wire and Instrument Panel No.2 Wire (Instrument Panel Brace LH)
IK1	Console Box Wire and Instrument Panel Wire (Under the Instrument Panel Brace LH)
IK2	
IL1	Radio Installation Sub Wire and Instrument Panel Wire (Under the Instrument Panel Brace LH)

▭ : Location of Connector Joining Wire Harness and Wire Harness

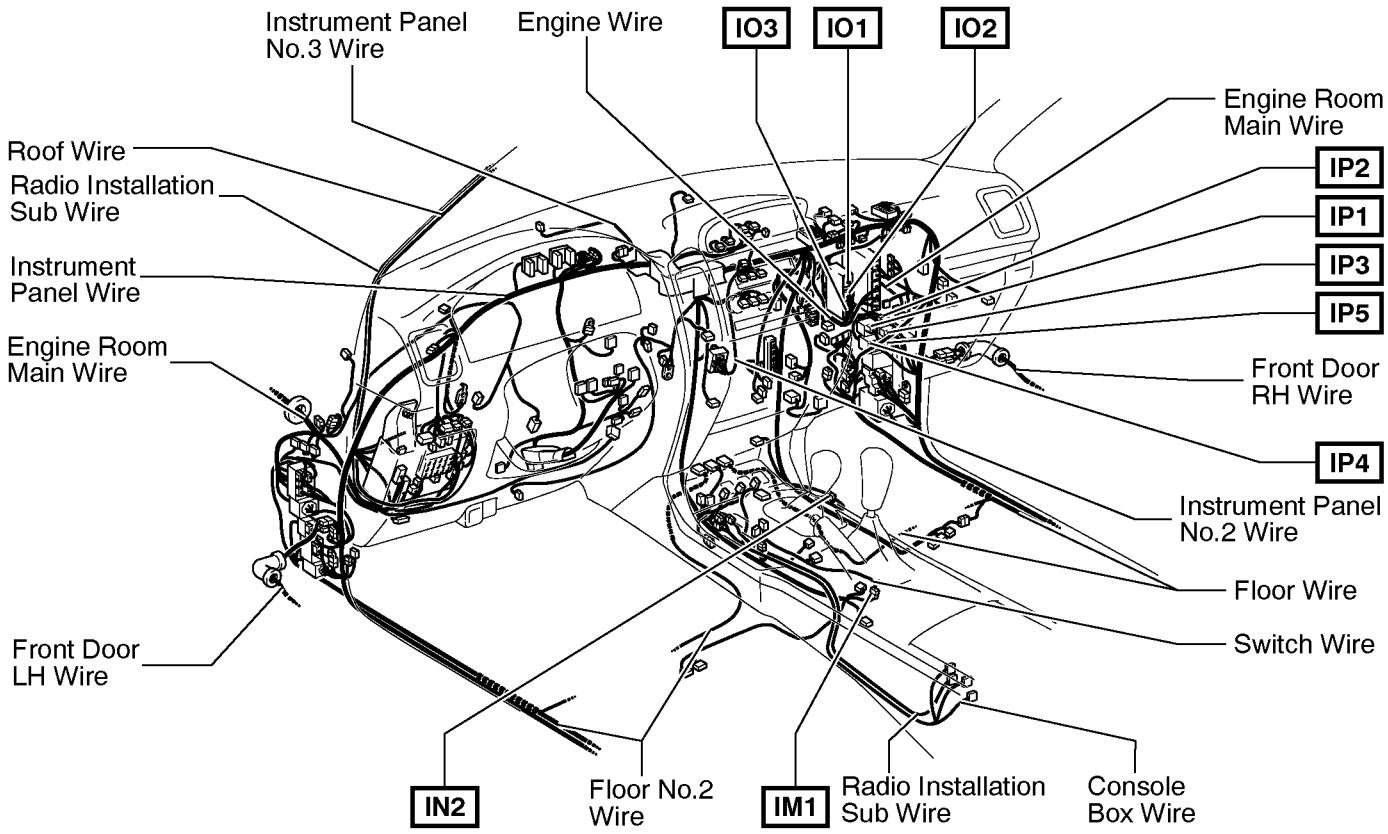

Connector Joining Wire Harness and Wire Harness

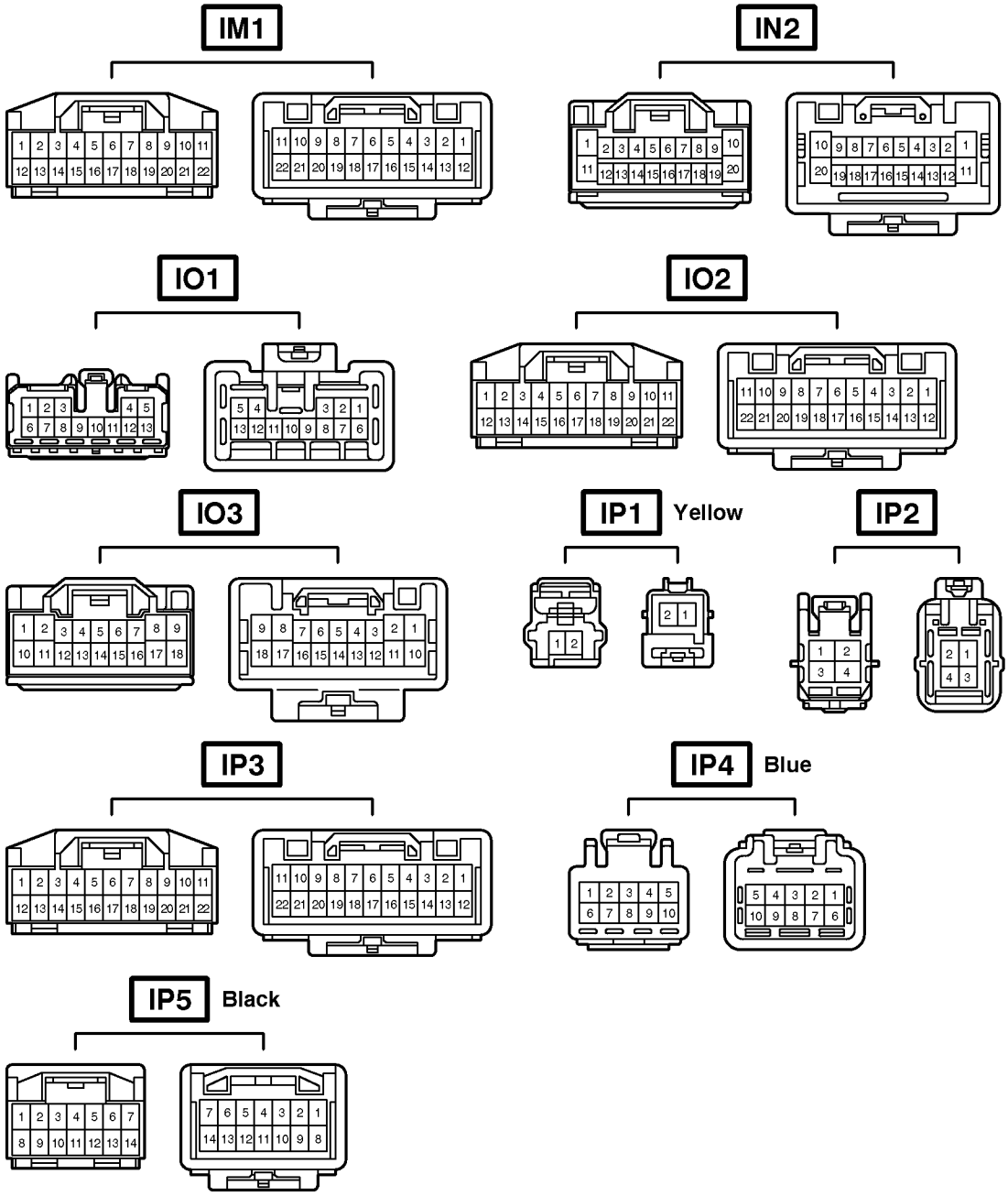

Code	Joining Wire Harness and Wire Harness (Connector Location)
IM1	Instrument Panel Wire and Switch Wire (Front Side of the Console Box)
IN2	Instrument Panel Wire and Instrument Panel Wire (Under the Instrument Panel Brace RH)
IO1	Engine Wire and Instrument Panel Wire (Right Side of the Blower Unit)
IO2	
IO3	
IP1	Instrument Panel Wire and Engine Room Main Wire (Right Kick Panel)
IP2	
IP3	
IP4	
IP5	

▭ : Location of Connector Joining Wire Harness and Wire Harness

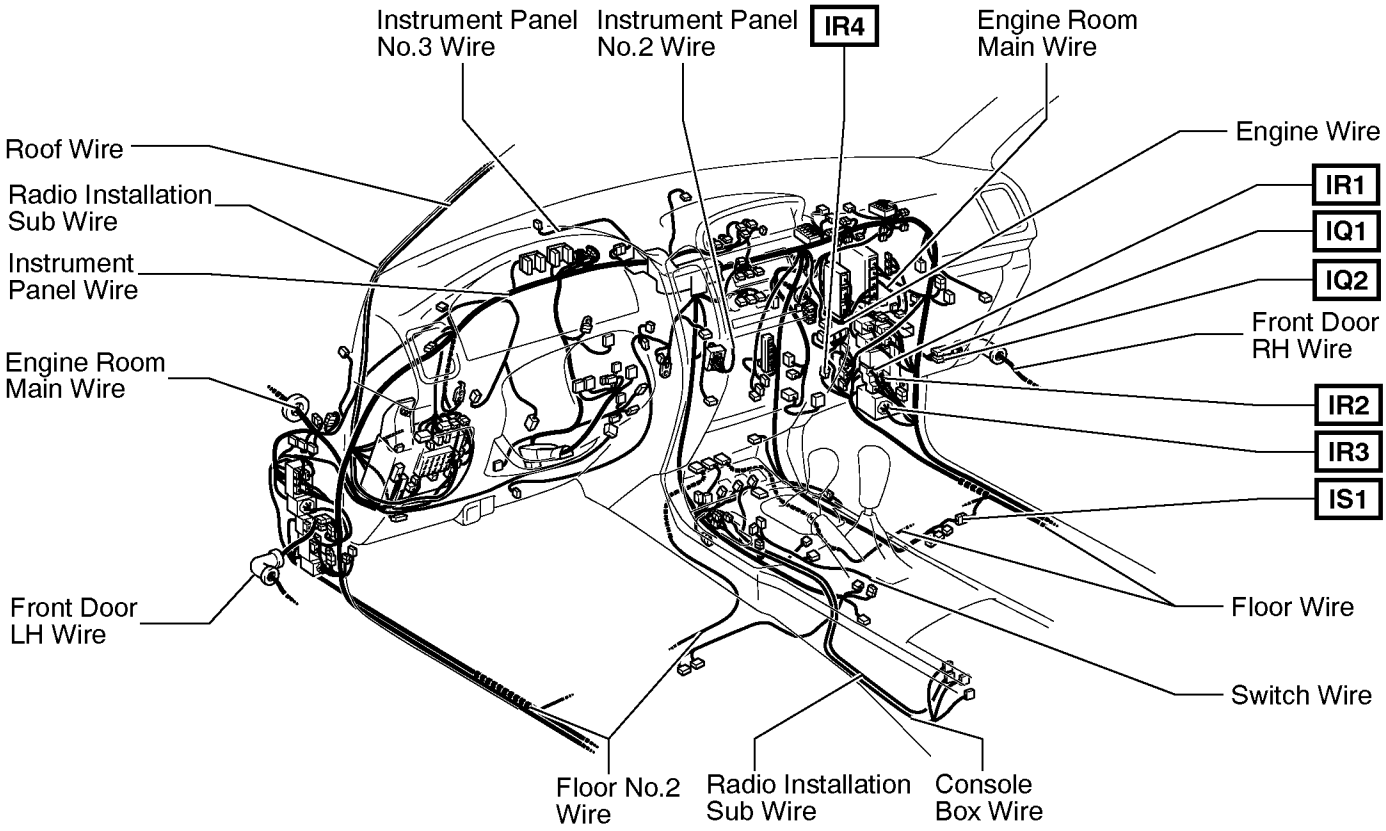

Connector Joining Wire Harness and Wire Harness

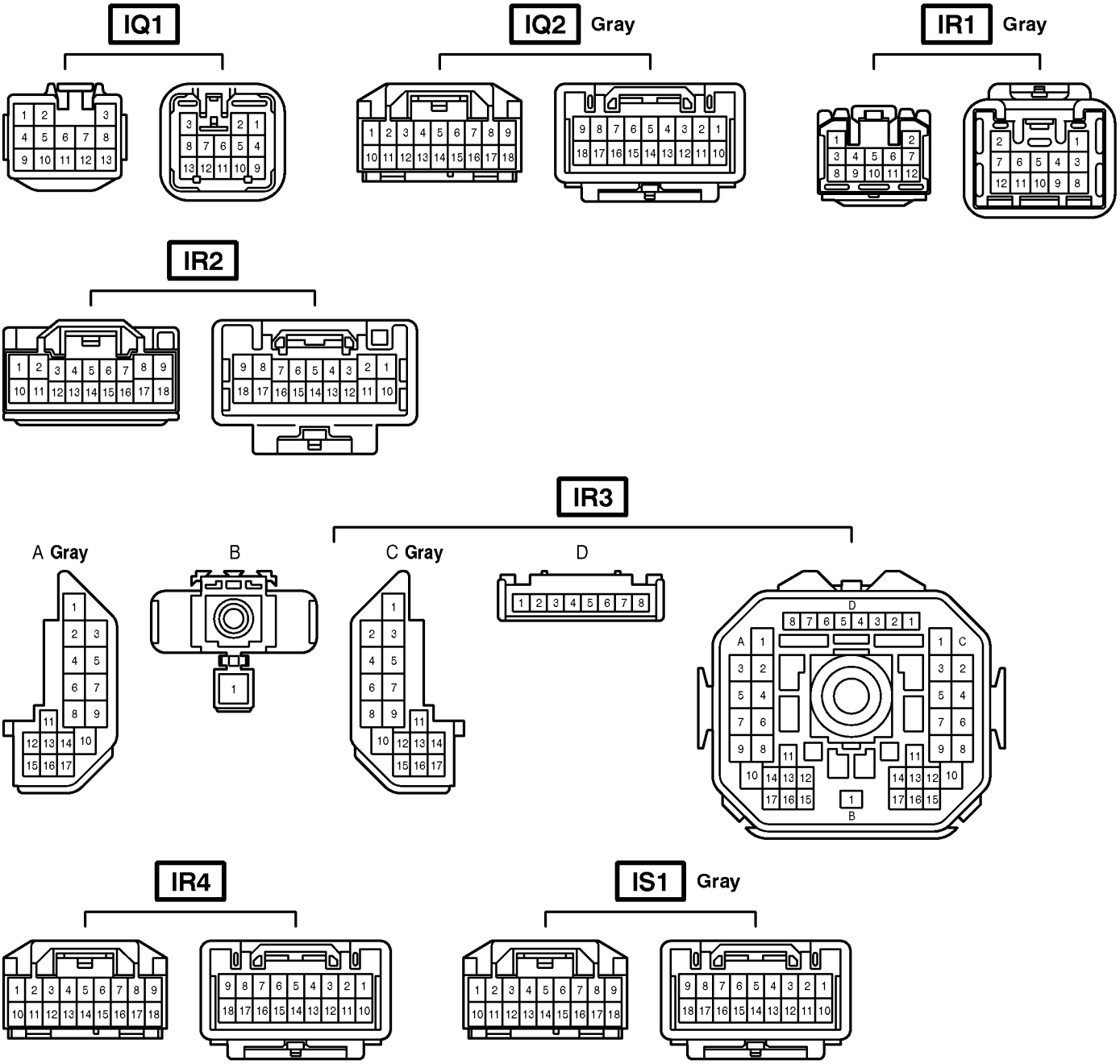

Code	Joining Wire Harness and Wire Harness (Connector Location)
IQ1	Front Door RH Wire and Instrument Panel Wire (Right Kick Panel)
IQ2	
IR1	Instrument Panel Wire and Floor Wire (Right Kick Panel)
IR2	
IR3	
IR4	
IS1	Instrument Panel Wire and Floor Wire (Under the Front Passenger's Seat)

▭ : Location of Connector Joining Wire Harness and Wire Harness

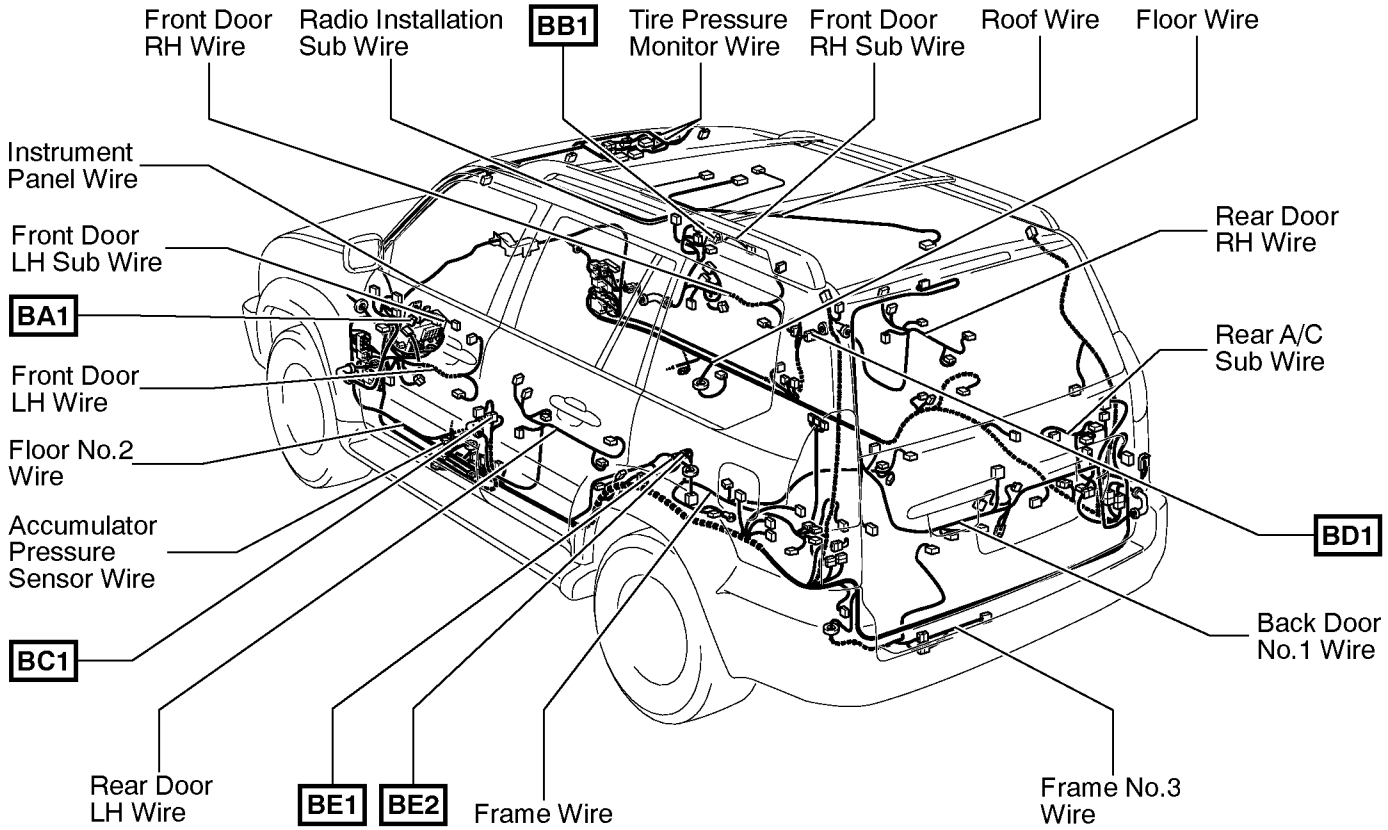

▽ : Location of Ground Points

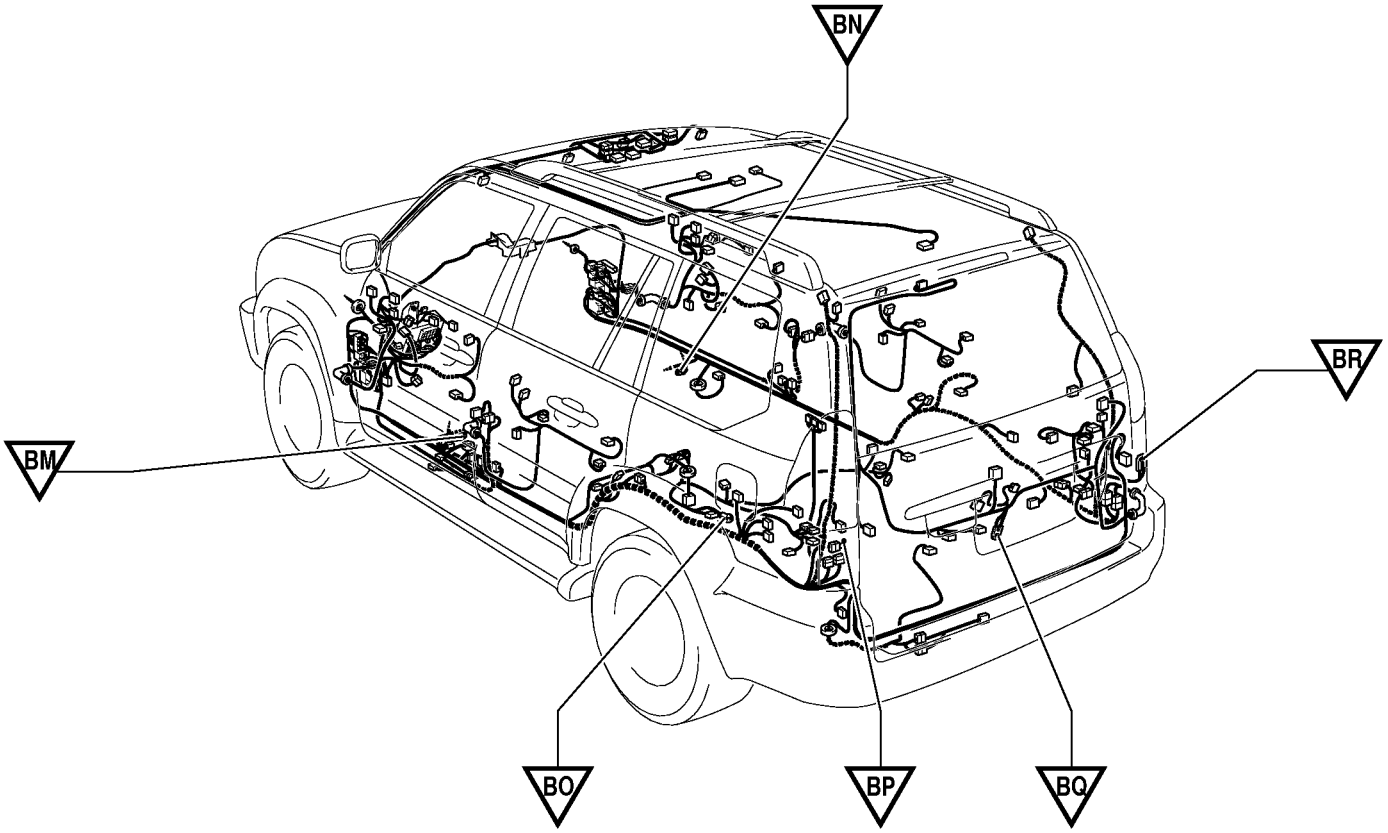

Connector Joining Wire Harness and Wire Harness

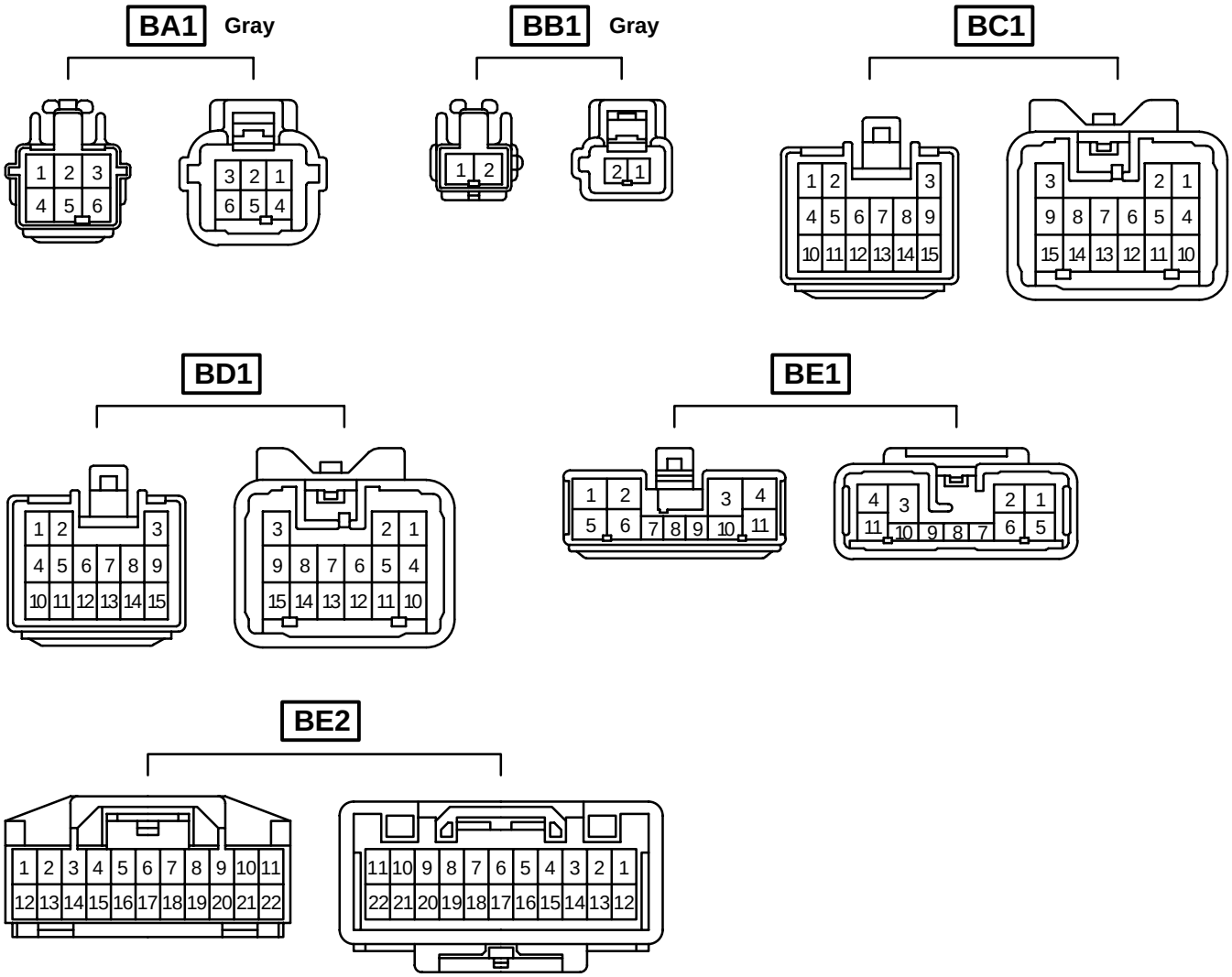

Code	Joining Wire Harness and Wire Harness (Connector Location)
BA1	Front Door LH Wire and Front Door LH Sub Wire (Inside of Front Door LH)
BB1	Front Door RH Wire and Front Door RH Sub Wire (Inside of Front Door RH)
BC1	Rear Door LH Wire and Instrument Panel Wire (Center Pillar LH)
BD1	Rear Door RH Wire and Instrument Panel Wire (Center Pillar RH)
BE1	Frame Wire and Floor No.2 Wire (Under the Left Side of Rear Seat Cushion)
BE2	

▭ : Location of Connector Joining Wire Harness and Wire Harness

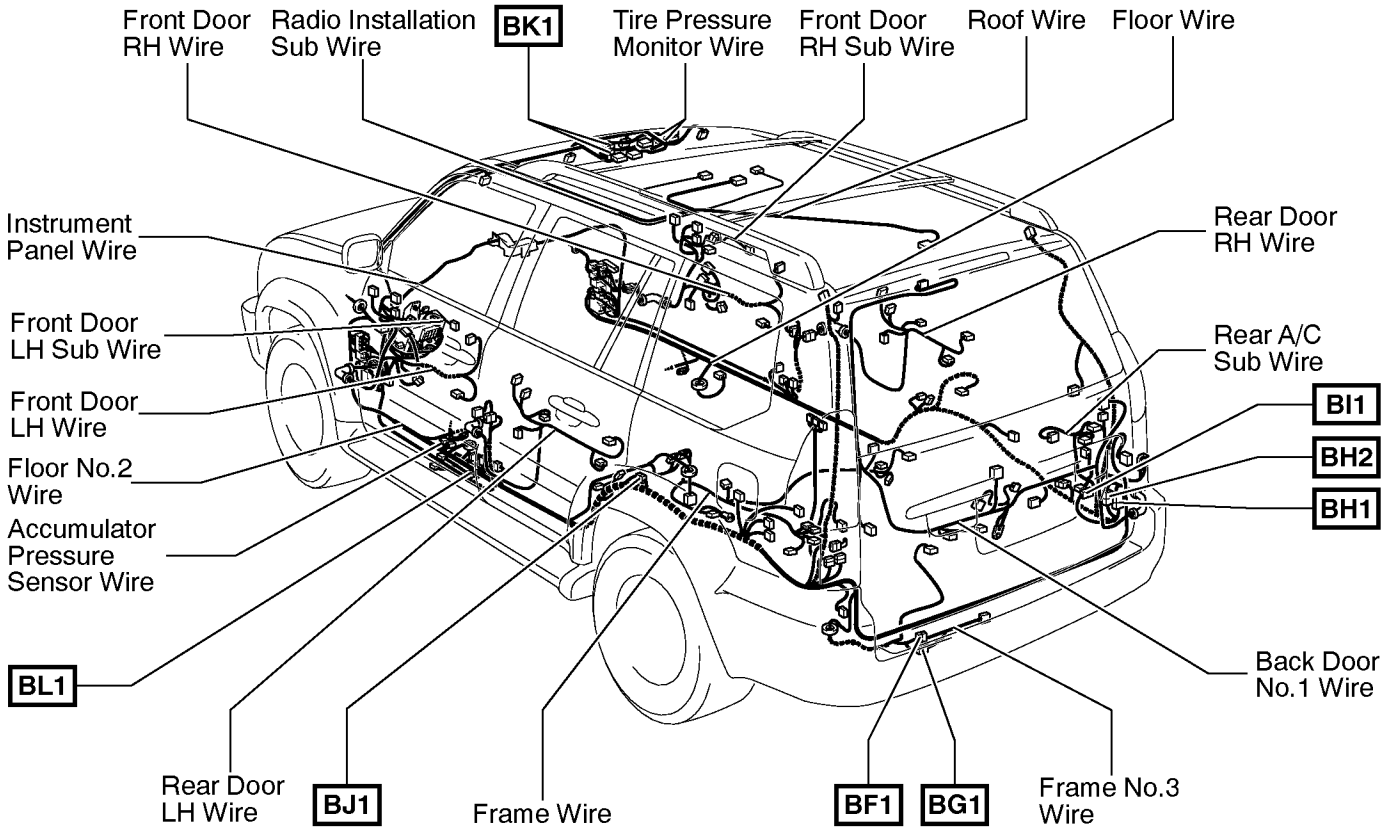

⬡ : Location of Splice Points

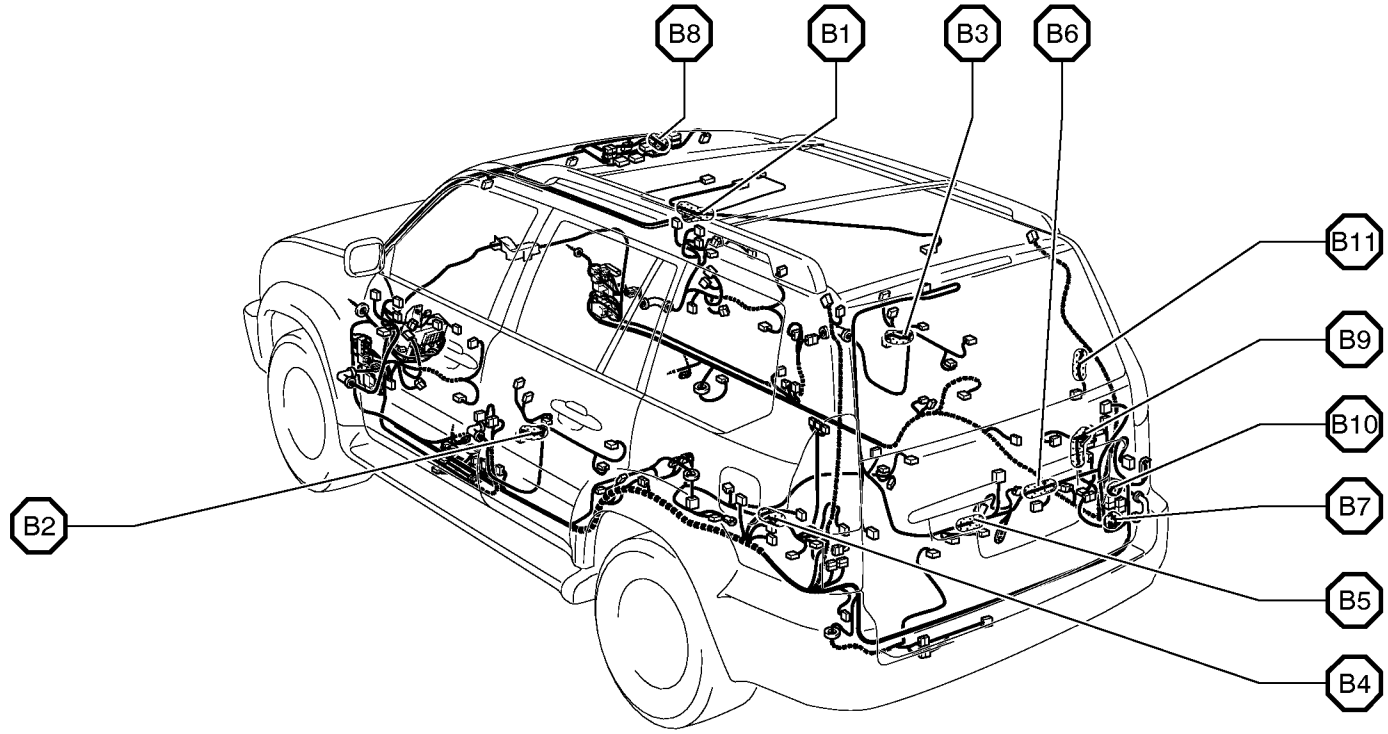

Connector Joining Wire Harness and Wire Harness

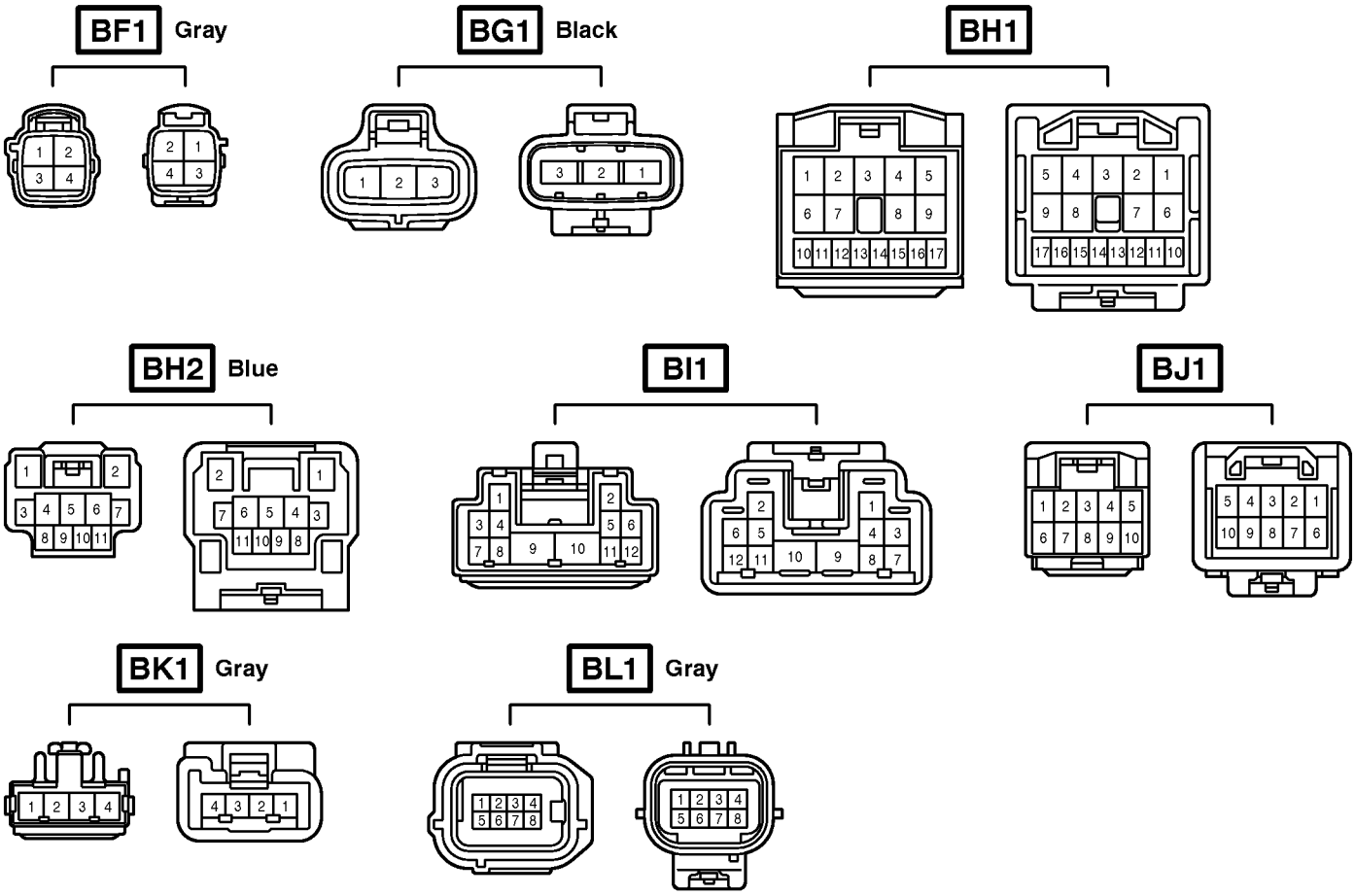

Code	Joining Wire Harness and Wire Harness (Connector Location)
BF1	Floor No.2 Wire and Frame No.3 Wire (Left Side of Rear Floor Crossmember)
BG1	Frame No.3 Wire and Floor No.2 Wire (Left Side of Rear Floor Crossmember)
BH1	Back Door No.1 Wire and Floor Wire (Right Quarter Panel Inner)
BH2	
BI1	Floor Wire and Rear A/C Sub Wire (Right Quarter Panel Inner)
BJ1	Floor No.2 Wire and Floor No.2 Wire (Left Side Rear Quarter Panel)
BK1	Roof Wire and Tire Pressure Monitor Wire (Front Side of Roof)
BL1	Floor Wire and Accumulator Pressure Sensor Wire (Main Floor Side Member LH)

▭ : Location of Connector Joining Wire Harness and Wire Harness

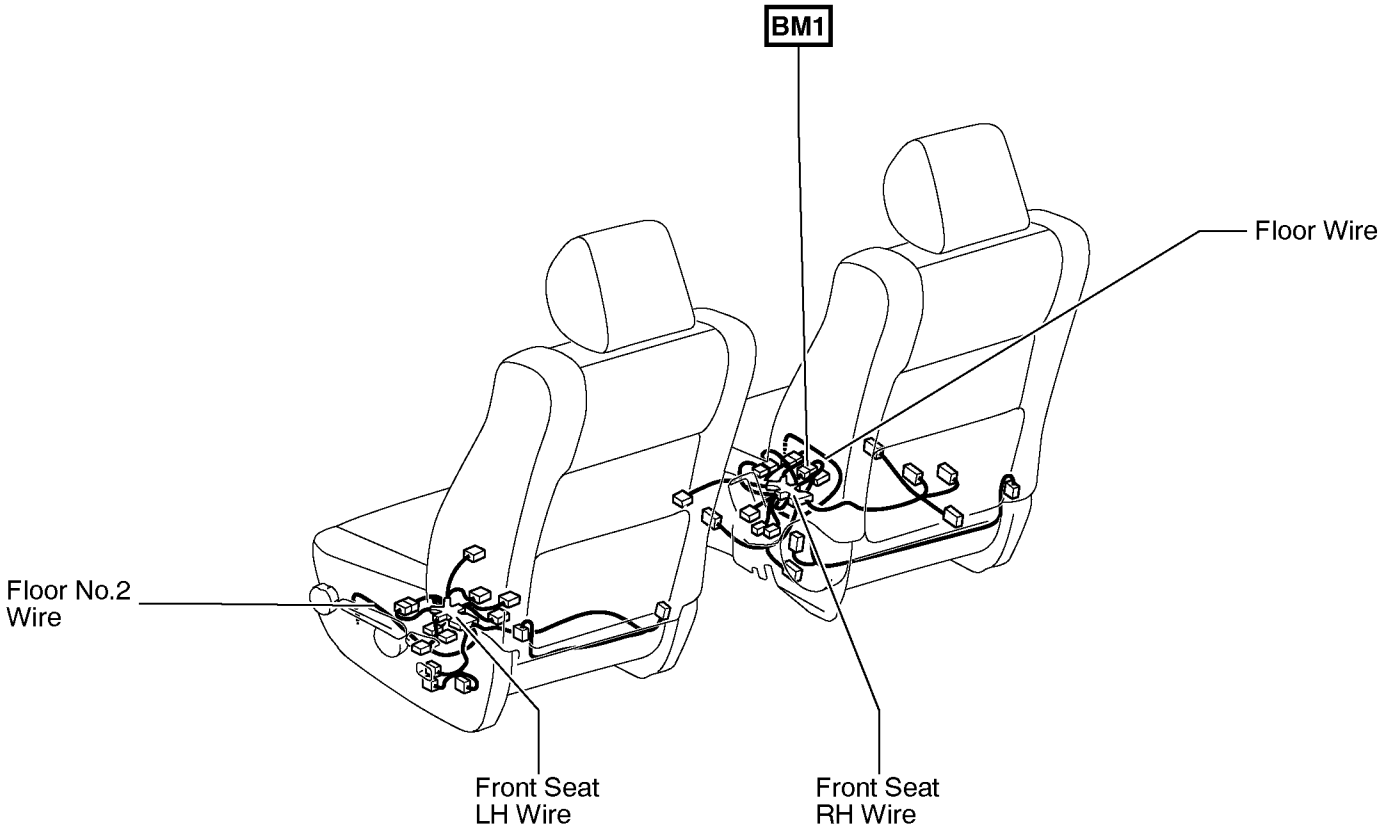

Connector Joining Wire Harness and Wire Harness

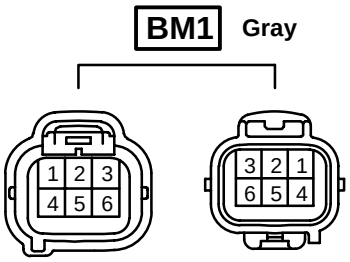

Code	Joining Wire Harness and Wire Harness (Connector Location)
BM1	Floor Wire and Front Seat RH Wire (Under the Front Passenger's Seat)

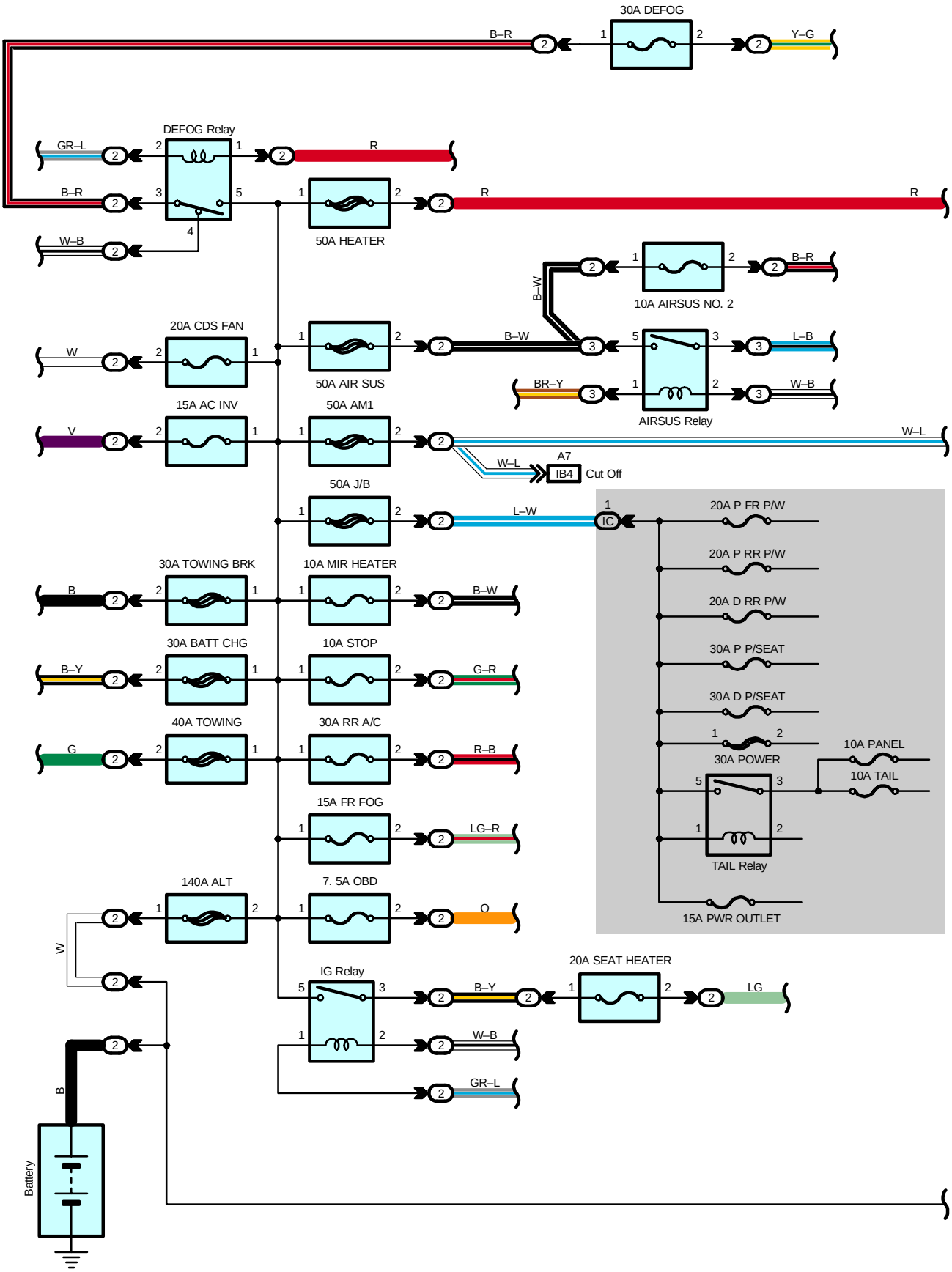
30A DEFOG
B–R
Y–G
DEFOG Relay
GR–L
R
B–R
W–B
50A HEATER
10A AIRSUS NO. 2
B–W
20A CDS FAN
W
50A AIR SUS
L–B
BR–Y
W–B
AIRSUS Relay
15A AC INV
V
50A AM1
W–L
A7
IB4
Cut Off
50A J/B
L–W
IC
20A P FR P/W
20A P RR P/W
20A D RR P/W
30A P P/SEAT
30A D P/SEAT
30A POWER
10A PANEL
10A TAIL
TAIL Relay
15A PWR OUTLET
30A TOWING BRK
B
10A MIR HEATER
30A BATT CHG
B–Y
10A STOP
G–R
40A TOWING
G
30A RR A/C
R–B
15A FR FOG
LG–R
140A ALT
7. 5A OBD
O
W
IG Relay
20A SEAT HEATER
LG
GR–L
Battery

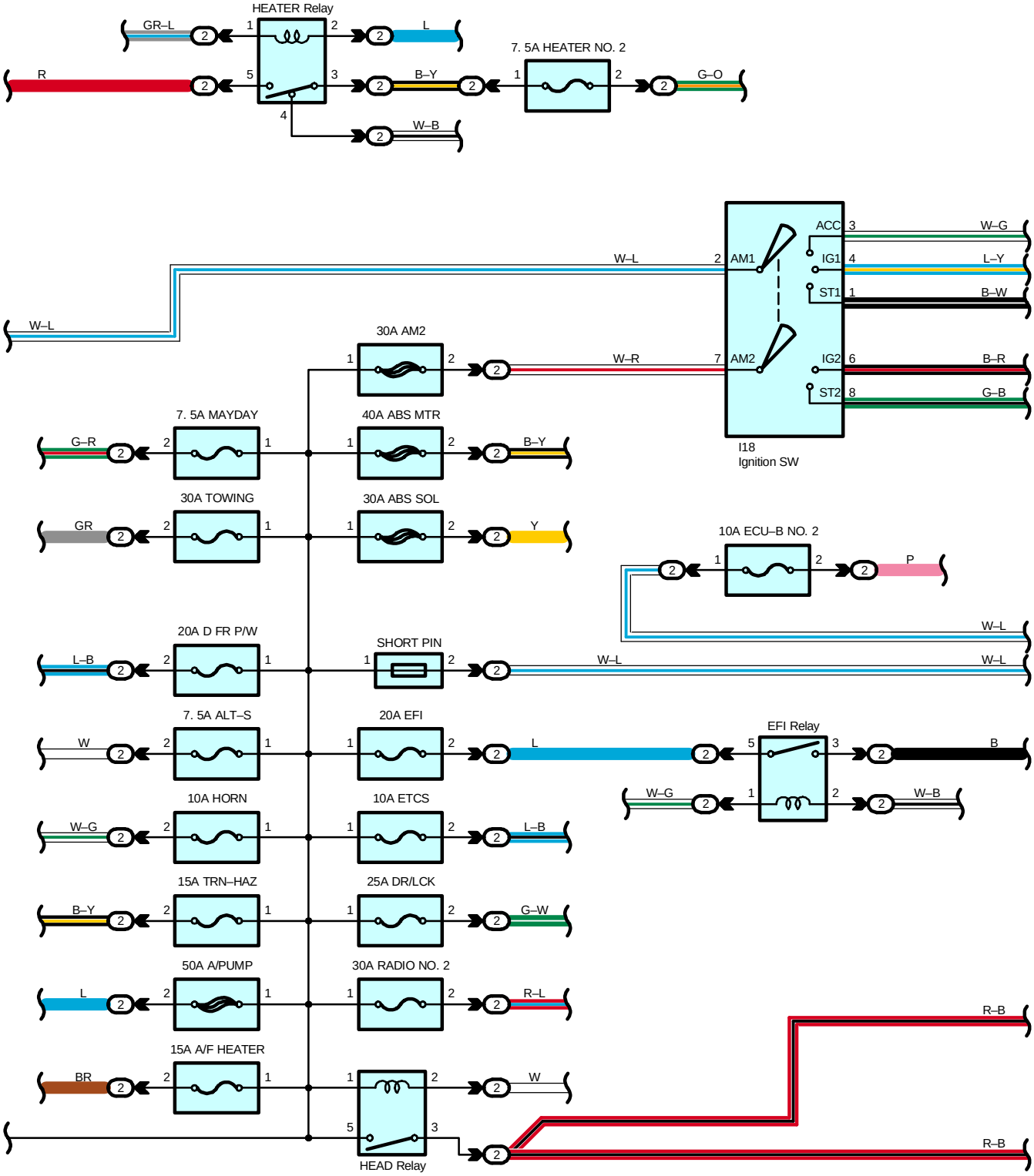
HEATER Relay
GR–L
L
R
B–Y
W–B
7. 5A HEATER NO. 2
G–O
W–L
W–L
AM1
AM2
ACC
IG1
ST1
IG2
ST2
W–G
L–Y
B–W
B–R
G–B
I18
Ignition SW
30A AM2
W–R
7. 5A MAYDAY
G–R
40A ABS MTR
B–Y
30A TOWING
GR
30A ABS SOL
Y
10A ECU–B NO. 2
P
W–L
20A D FR P/W
L–B
SHORT PIN
W–L
W–L
7. 5A ALT–S
W
20A EFI
L
EFI Relay
B
W–G
W–B
10A HORN
W–G
10A ETCS
L–B
15A TRN–HAZ
B–Y
25A DR/LCK
G–W
50A A/PUMP
L
30A RADIO NO. 2
R–L
R–B
15A A/F HEATER
BR
W
HEAD Relay
R–B

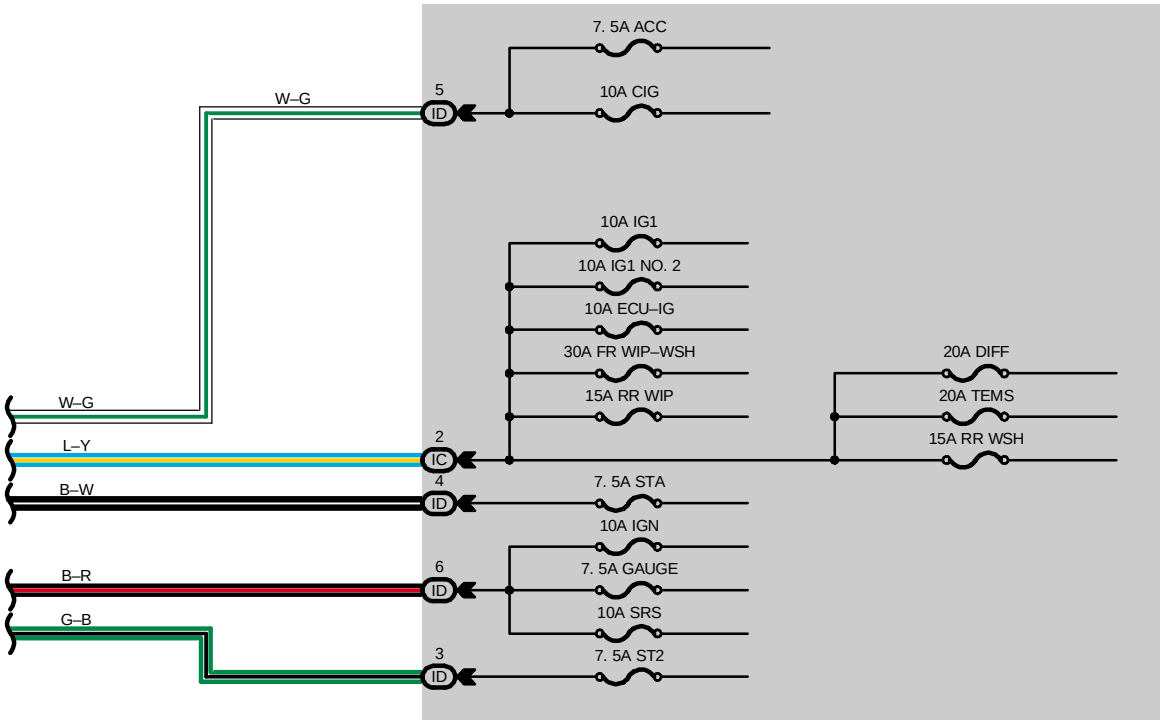
7. 5A ACC
10A CIG
W–G
5
ID
10A IG1
10A IG1 NO. 2
10A ECU–IG
30A FR WIP–WSH
15A RR WIP
20A DIFF
20A TEMS
15A RR WSH
W–G
L–Y
2
IC
B–W
4
ID
7. 5A STA
10A IGN
B–R
6
ID
7. 5A GAUGE
10A SRS
G–B
3
ID
7. 5A ST2

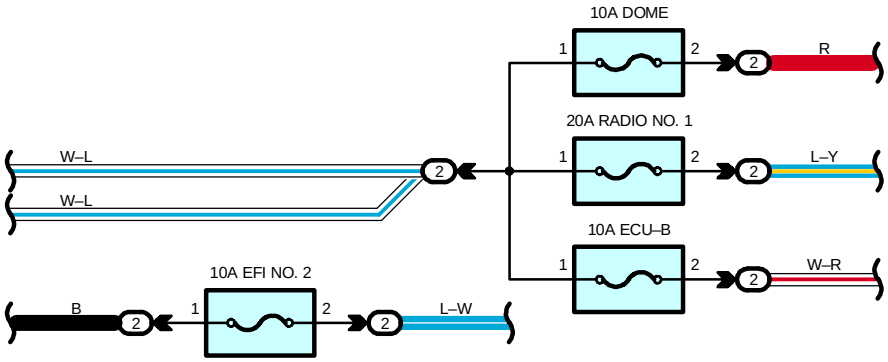
10A DOME
1
2
2
R
20A RADIO NO. 1
W–L
2
1
2
2
L–Y
W–L
10A ECU–B
1
2
2
W–R
10A EFI NO. 2
B
2
1
2
2
L–W

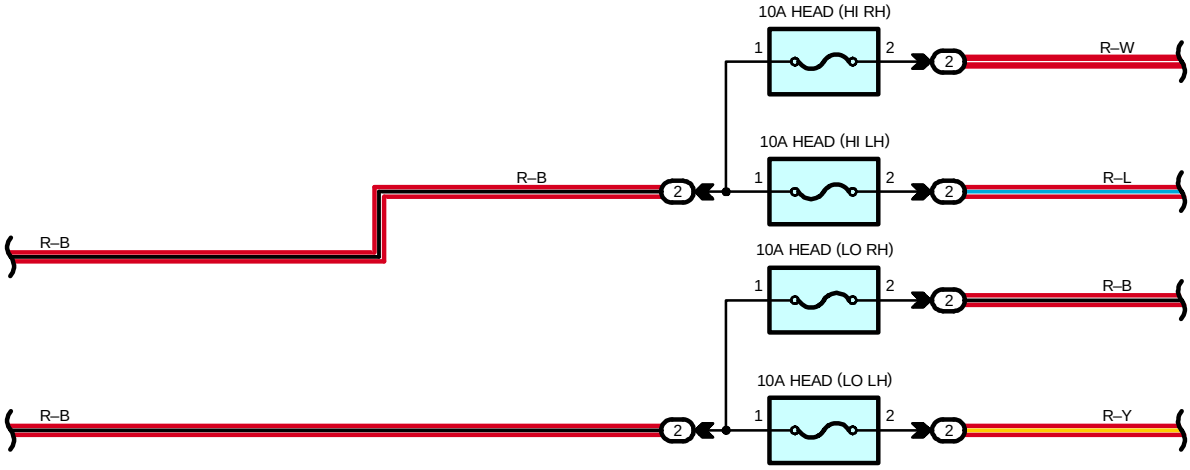
10A HEAD (HI RH)
1
2
2
R–W
10A HEAD (HI LH)
R–B
2
1
2
2
R–L
R–B
10A HEAD (LO RH)
1
2
2
R–B
10A HEAD (LO LH)
R–B
2
1
2
2
R–Y

Service Hints

HEAD Relay

5–3 : Closed with the light control SW at HEAD position or dimmer SW at FLASH position
Closed with the engine running and parking brake released (Parking brake SW off)

I18 Ignition SW

2–3 : Closed with the ignition key at ACC or ON position
2–4 : Closed with the ignition key at ON or ST position
2–1 : Closed with the ignition key at ST position
7–6 : Closed with the ignition key at ON or ST position
7–8 : Closed with the ignition key at ST position

TAIL Relay

3–5 : Closed with the light control SW at TAIL or HEAD position

: Parts Location

Code	See Page	Code	See Page	Code	See Page
I18	39				

: Relay Blocks

Code	See Page	Relay Blocks (Relay Block Location)
2	22	Engine Room R/B (Engine Compartment Left)
3	23	Engine Room R/B No.3 (Engine Compartment Left)

: Junction Block and Wire Harness Connector

Code	See Page	Junction Block and Wire Harness (Connector Location)
IC	26	Engine Room Main Wire and Driver Side J/B (Lower Finish Panel)
ID		

: Connector Joining Wire Harness and Wire Harness

Code	See Page	Joining Wire Harness and Wire Harness (Connector Location)
IB4	50	Instrument Panel Wire and Engine Room Main Wire (Left Kick Panel)

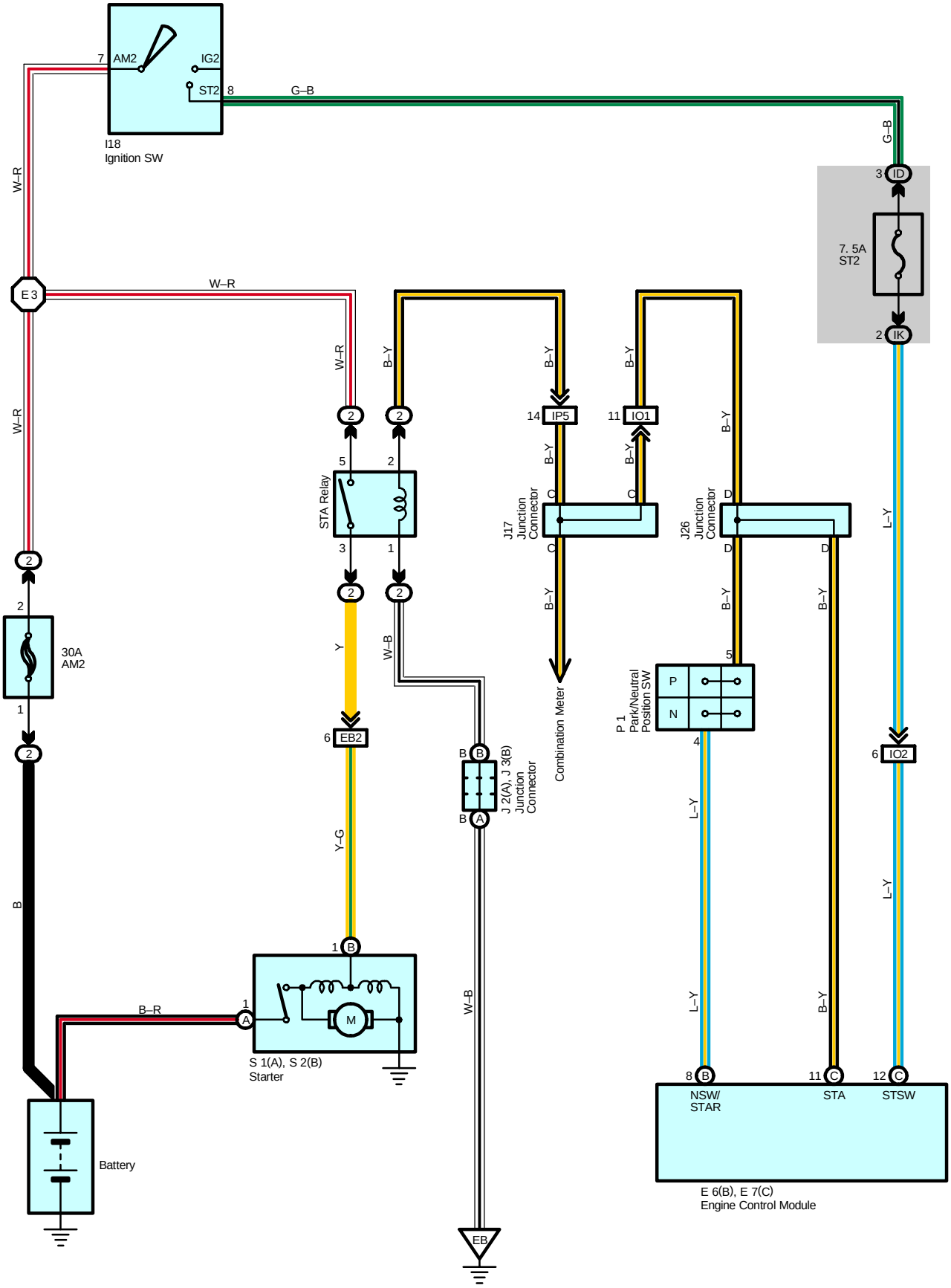
I18
Ignition SW
AM2
IG2
ST2
G–B
W–R
E 3
7. 5A
ST2
ID
IK
STA Relay
IP5
IO1
J17
Junction
Connector
J26
Junction
Connector
Combination Meter
P 1
Park/Neutral
Position SW
P
N
30A
AM2
EB2
IO2
J 2(A), J 3(B)
Junction
Connector
B–Y
L–Y
Y
Y–G
W–B
B–R
B
S 1(A), S 2(B)
Starter
Battery
NSW/
STAR
STA
STSW
E 6(B), E 7(C)
Engine Control Module
EB

Service Hints

I18 Ignition SW

7–8 : Closed with the ignition SW at ST position

P1 Park/Neutral Position SW

5–4 : Closed with the A/T shift lever in P or N position

S1 (A), S2 (B) Starter

Point closed with the neutral start SW at P or N position and the ignition SW at ST position

: Parts Location

Code		See Page	Code		See Page	Code		See Page
E6	B	39	J3	B	37	S1	A	37
E7	C	39	J17		40	S2	B	37
I18		39	J26		40			
J2	A	37	P1		37			

: Relay Blocks

Code	See Page	Relay Blocks (Relay Block Location)
2	22	Engine Room R/B (Engine Compartment Left)

: Junction Block and Wire Harness Connector

Code	See Page	Junction Block and Wire Harness (Connector Location)
ID	26	Engine Room Main Wire and Driver Side J/B (Lower Finish Panel)
IK	27	Instrument Panel Wire and Driver Side J/B (Lower Finish Panel)

: Connector Joining Wire Harness and Wire Harness

Code	See Page	Joining Wire Harness and Wire Harness (Connector Location)
EB2	48	Engine No.2 Wire and Engine Room Main Wire (Near the Engine Room R/B)
IO1	54	Engine Wire and Instrument Panel Wire (Right Side of the Blower Unit)
IO2		
IP5	54	Instrument Panel Wire and Engine Room Main Wire (Right Kick Panel)

: Ground Points

Code	See Page	Ground Points Location
EB	48	Front Left Fender

: Splice Points

Code	See Page	Wire Harness with Splice Points	Code	See Page	Wire Harness with Splice Points
E3	48	Engine Room Main Wire			

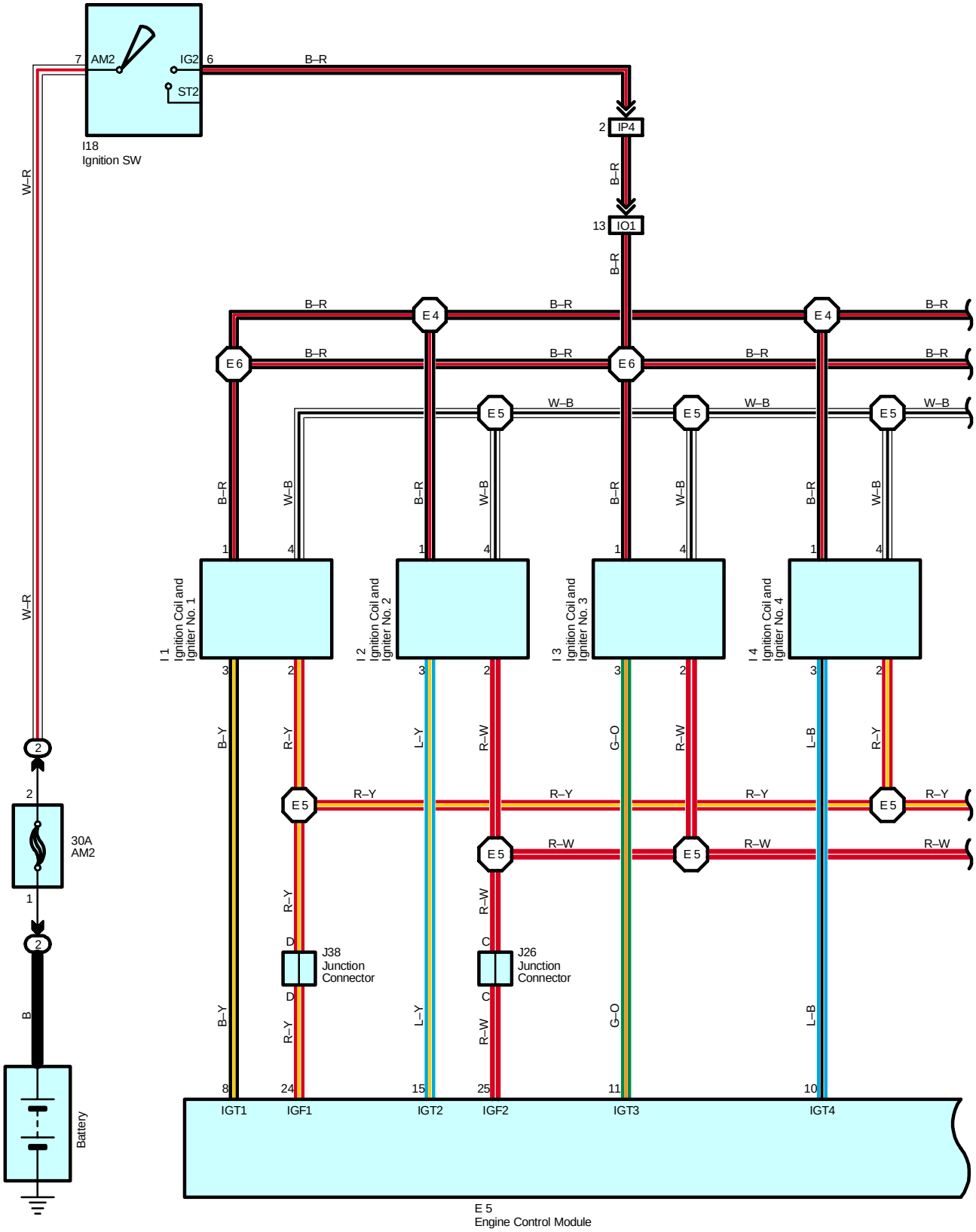
I18
Ignition SW
7 AM2
IG2 6
ST2
B–R
2 IP4
13 IO1
W–R
E 4
E 6
E 5
W–B
I 1
Ignition Coil and Igniter No. 1
I 2
Ignition Coil and Igniter No. 2
I 3
Ignition Coil and Igniter No. 3
I 4
Ignition Coil and Igniter No. 4
B–Y
R–Y
L–Y
R–W
G–O
L–B
30A
AM2
J38
Junction Connector
J26
Junction Connector
Battery
IGT1
IGF1
IGT2
IGF2
IGT3
IGT4
E 5
Engine Control Module

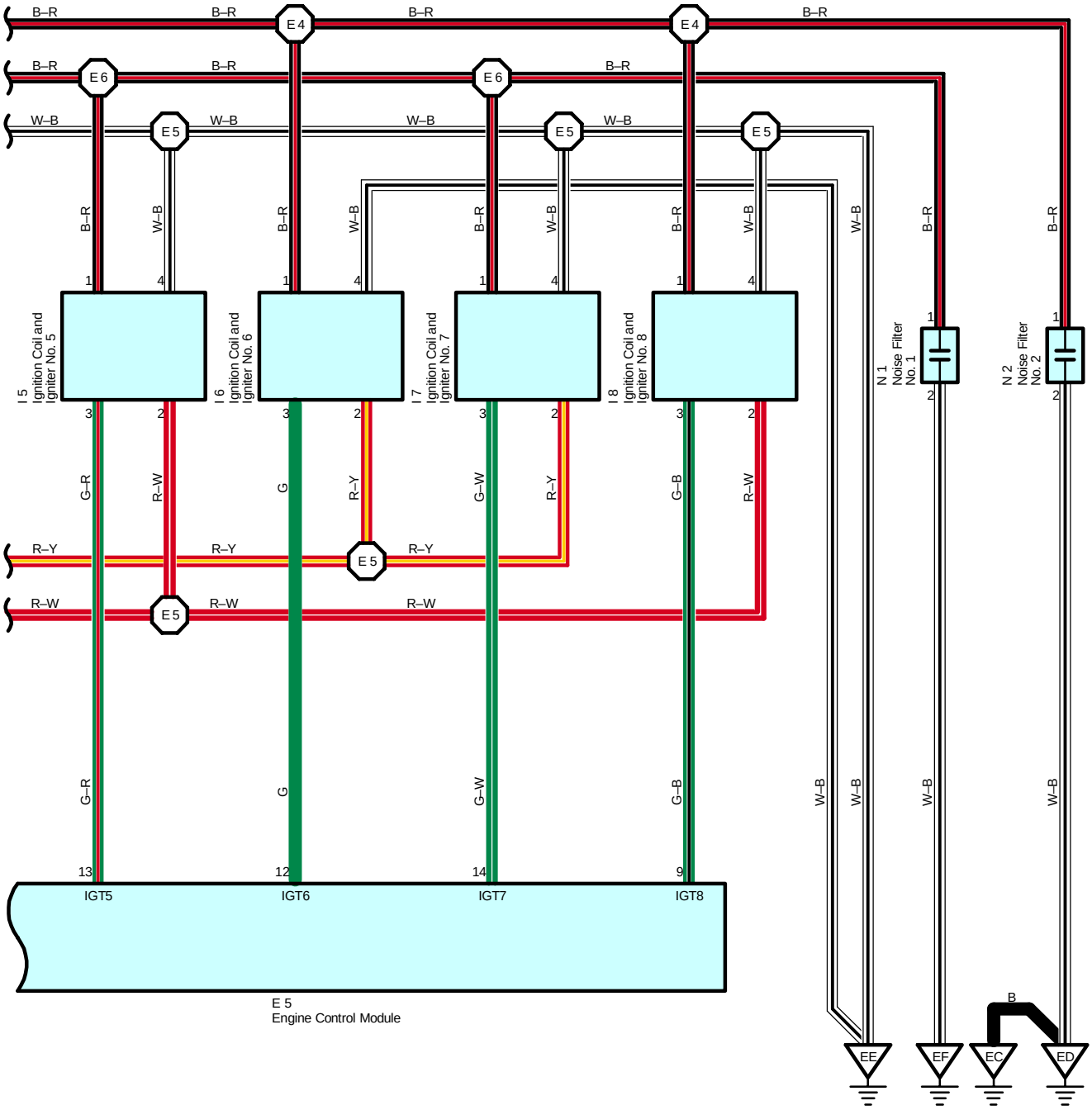
B–R
E 4
E 6
W–B
E 5
I 5
Ignition Coil and Igniter No. 5
I 6
Ignition Coil and Igniter No. 6
I 7
Ignition Coil and Igniter No. 7
I 8
Ignition Coil and Igniter No. 8
N 1
Noise Filter No. 1
N 2
Noise Filter No. 2
G–R
R–W
G
R–Y
G–W
G–B
R–Y
R–W
IGT5
IGT6
IGT7
IGT8
E 5
Engine Control Module
B
EE
EF
EC
ED

Service Hints

I1, I2, I3, I4, I5, I6, I7, I8 Ignition Coil and Igniter No.1, No.2, No.3, No.4, No.5, No.6, No.7, No.8
1–Ground : Approx. 12 volts with the ignition SW at ON position
4–Ground : Always continuity

: Parts Location

Code	See Page	Code	See Page	Code	See Page
E5	39	I5	37	J26	40
I1	37	I6	37	J38	40
I2	37	I7	37	N1	37
I3	37	I8	37	N2	37
I4	37	I18	39		

: Relay Blocks

Code	See Page	Relay Blocks (Relay Block Location)
2	22	Engine Room R/B (Engine Compartment Left)

: Connector Joining Wire Harness and Wire Harness

Code	See Page	Joining Wire Harness and Wire Harness (Connector Location)
IO1	54	Engine Wire and Instrument Panel Wire (Right Side of the Blower Unit)
IP4	54	Instrument Panel Wire and Engine Room Main Wire (Right Kick Panel)

: Ground Points

Code	See Page	Ground Points Location
EC	48	Front Right Fender
ED	48	Rear Bank of Right Cylinder Head
EE	48	Rear Bank of Left Cylinder Head
EF		

: Splice Points

Code	See Page	Wire Harness with Splice Points	Code	See Page	Wire Harness with Splice Points
E4	48	Engine Wire	E6	48	Engine Wire
E5					

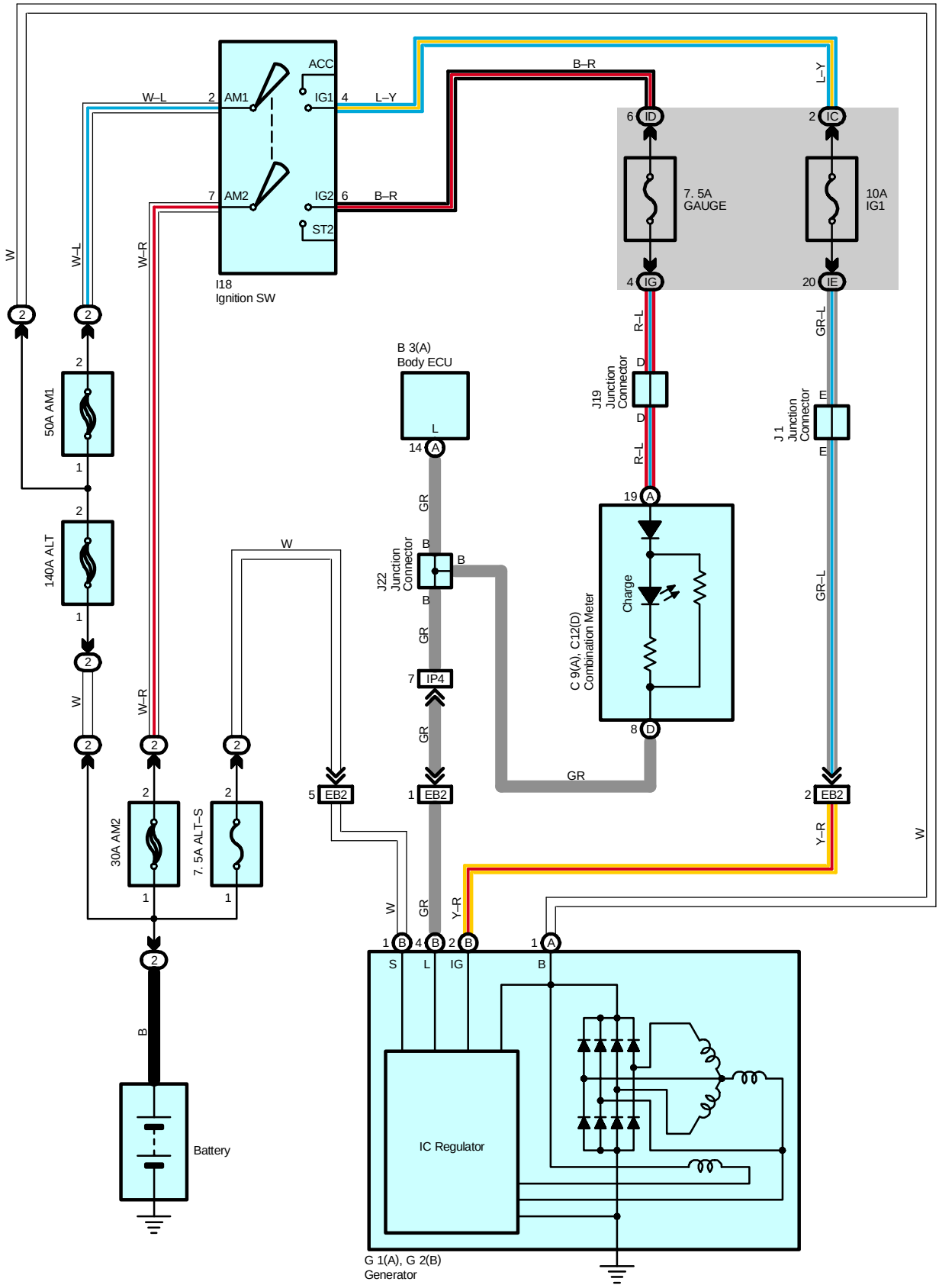
ACC
AM1
IG1
AM2
IG2
ST2
I18
Ignition SW
W–L
L–Y
B–R
W
W–R
6 ID
2 IC
7. 5A
GAUGE
10A
IG1
4 IG
20 IE
R–L
GR–L
B 3(A)
Body ECU
J19
Junction
Connector
J 1
Junction
Connector
50A AM1
140A ALT
J22
Junction
Connector
IP4
C 9(A), C12(D)
Combination Meter
Charge
GR
EB2
30A AM2
7. 5A ALT–S
Y–R
B
Battery
IC Regulator
S
L
IG
G 1(A), G 2(B)
Generator

Service Hints

G2 (B) Generator

(B) 4–Ground : 13.9–15.1 volts with the engine running at 2000 rpm and 25˚C (77˚F)
13.5–14.3 volts with the engine running at 5000 rpm and 115˚C (239˚F)

(B) 1–Ground : 0–4 volts with the ignition SW at ON position and the engine not running

: Parts Location

Code		See Page	Code		See Page	Code	See Page
B3	A	38	G1	A	36	J1	37
C9	A	38	G2	B	36	J19	40
C12	D	38	I18		39	J22	40

: Relay Blocks

Code	See Page	Relay Blocks (Relay Block Location)
2	22	Engine Room R/B (Engine Compartment Left)

: Junction Block and Wire Harness Connector

Code	See Page	Junction Block and Wire Harness (Connector Location)
IC	26	Engine Room Main Wire and Driver Side J/B (Lower Finish Panel)
ID		
IE		
IG	27	Instrument Panel Wire and Driver Side J/B (Lower Finish Panel)

: Connector Joining Wire Harness and Wire Harness

Code	See Page	Joining Wire Harness and Wire Harness (Connector Location)
EB2	48	Engine No.2 Wire and Engine Room Main Wire (Near the Engine Room R/B)
IP4	54	Instrument Panel Wire and Engine Room Main Wire (Right Kick Panel)

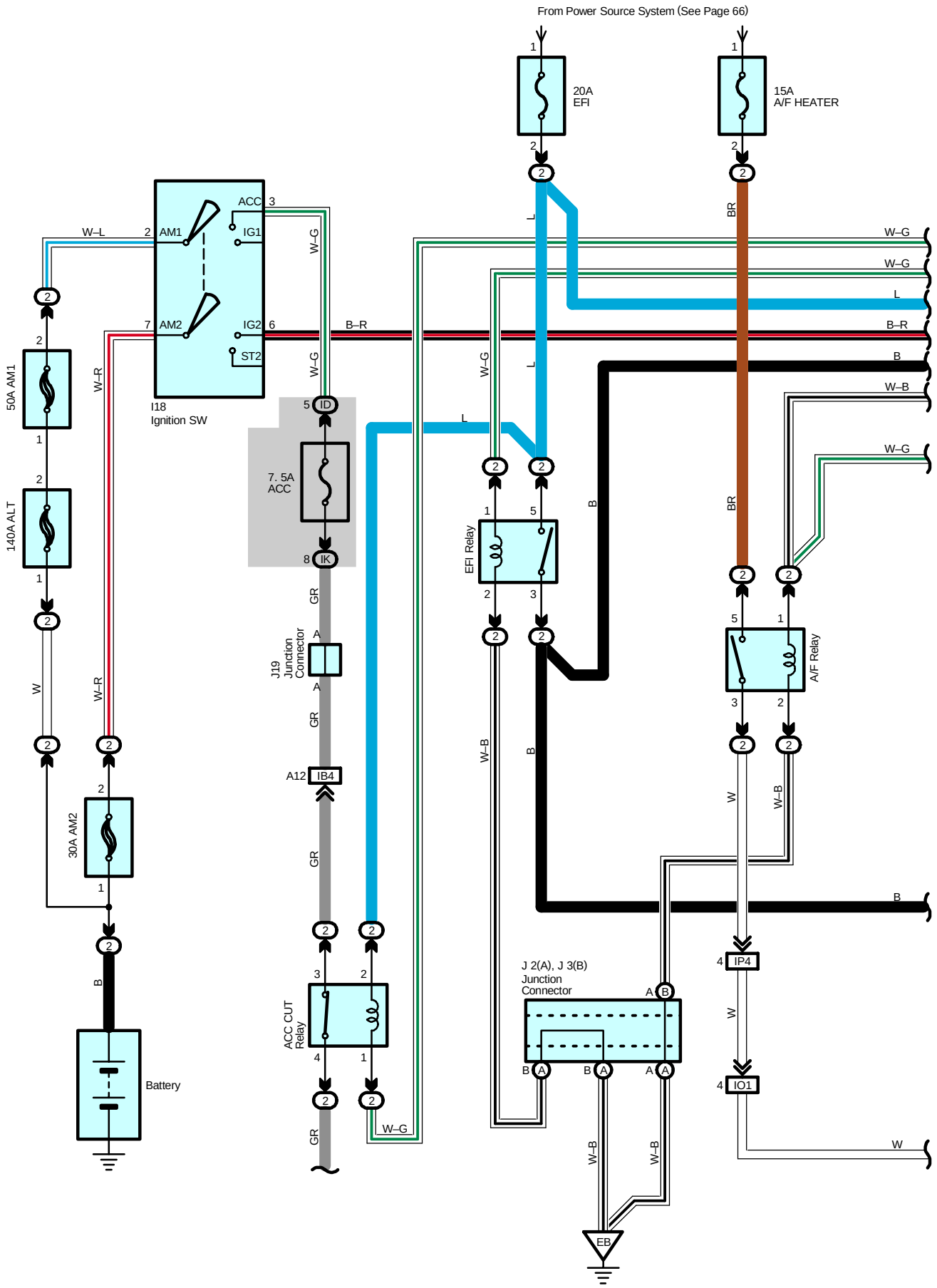
From Power Source System (See Page 66)
20A
EFI
15A
A/F HEATER
ACC
IG1
AM1
AM2
IG2
ST2
I18
Ignition SW
W–L
W–G
B–R
L
BR
B
W–B
W–R
W
50A AM1
140A ALT
30A AM2
Battery
7. 5A
ACC
ID
IK
GR
J19
Junction
Connector
A12
IB4
ACC CUT
Relay
EFI Relay
A/F Relay
J 2(A), J 3(B)
Junction
Connector
IP4
IO1
EB

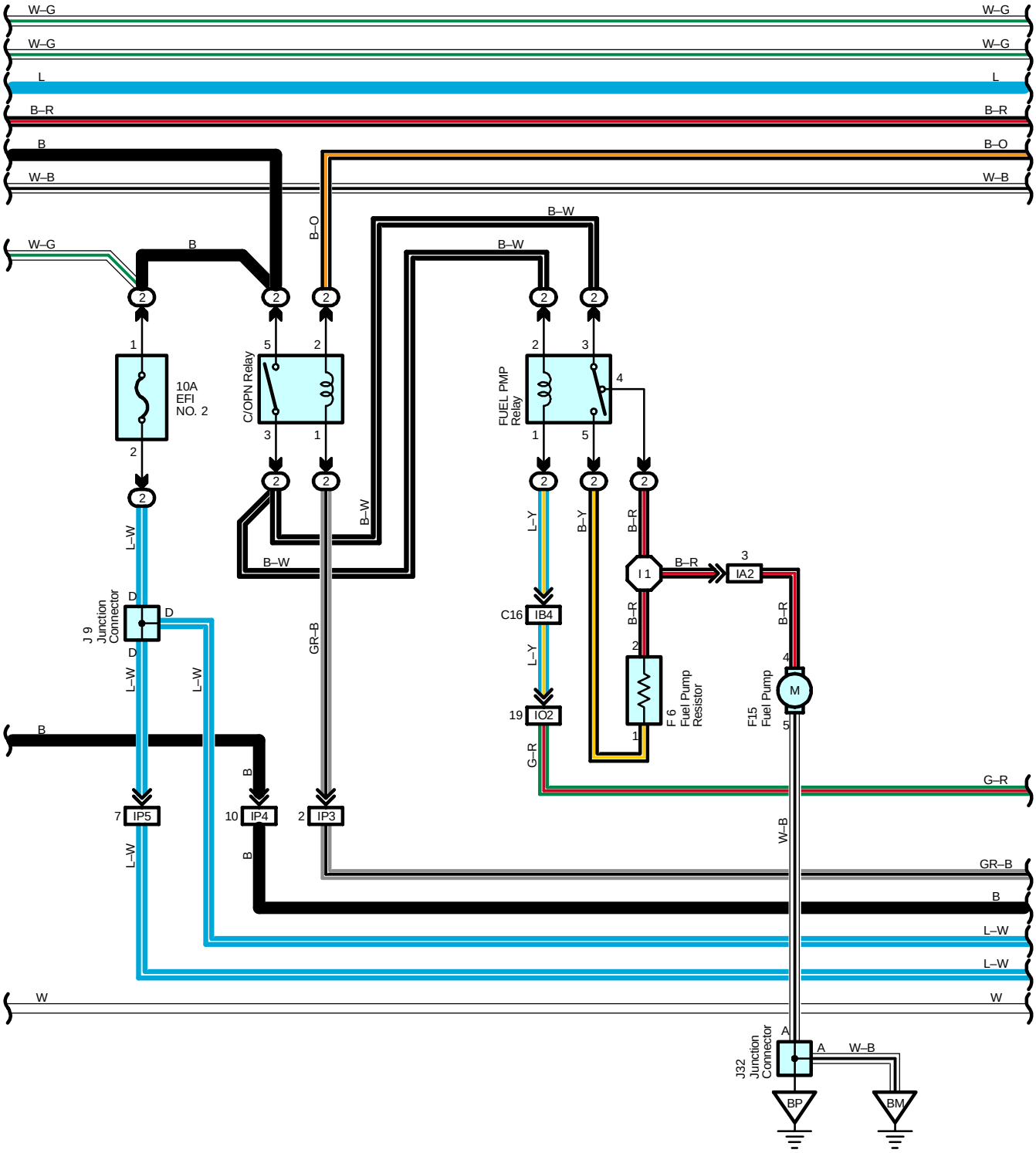
W–G
W–G
L
B–R
B
W–B
B–O
B–W
10A
EFI
NO. 2
C/OPN Relay
FUEL PMP
Relay
L–W
J 9
Junction
Connector
GR–B
L–Y
B–Y
B–R
I 1
IA2
C16
IB4
IO2
F 6
Fuel Pump
Resistor
F15
Fuel Pump
M
G–R
IP5
IP4
IP3
W–B
W
J32
Junction
Connector
BP
BM

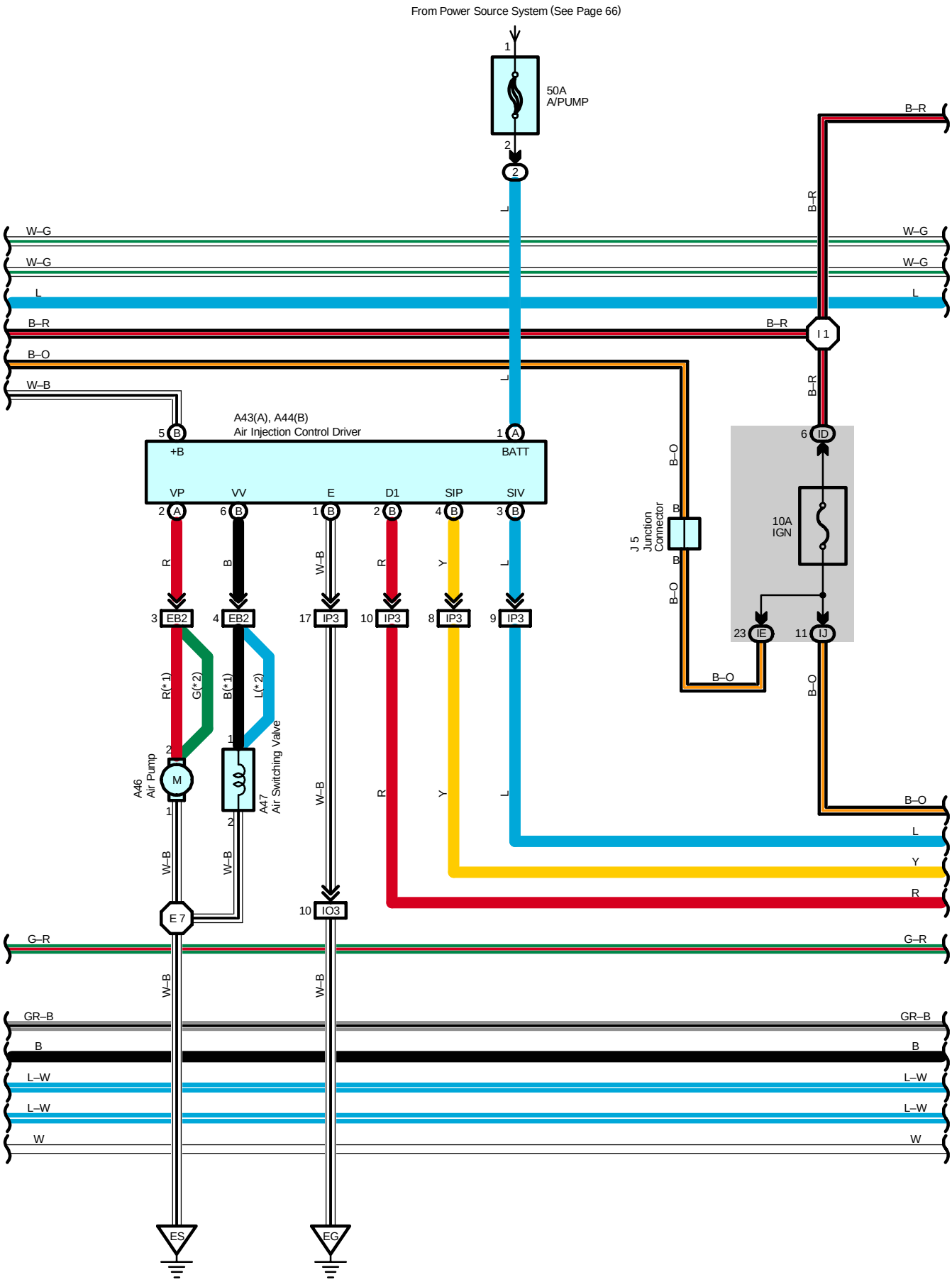
From Power Source System (See Page 66)
50A
A/PUMP
A43(A), A44(B)
Air Injection Control Driver
+B
BATT
VP
VV
E
D1
SIP
SIV
EB2
IP3
IO3
E 7
I 1
J 5
Junction
Connector
10A
IGN
IE
IJ
ID
A46
Air Pump
A47
Air Switching Valve
ES
EG
W–G
L
B–R
B–O
W–B
G–R
GR–B
B
L–W
W
Y
R

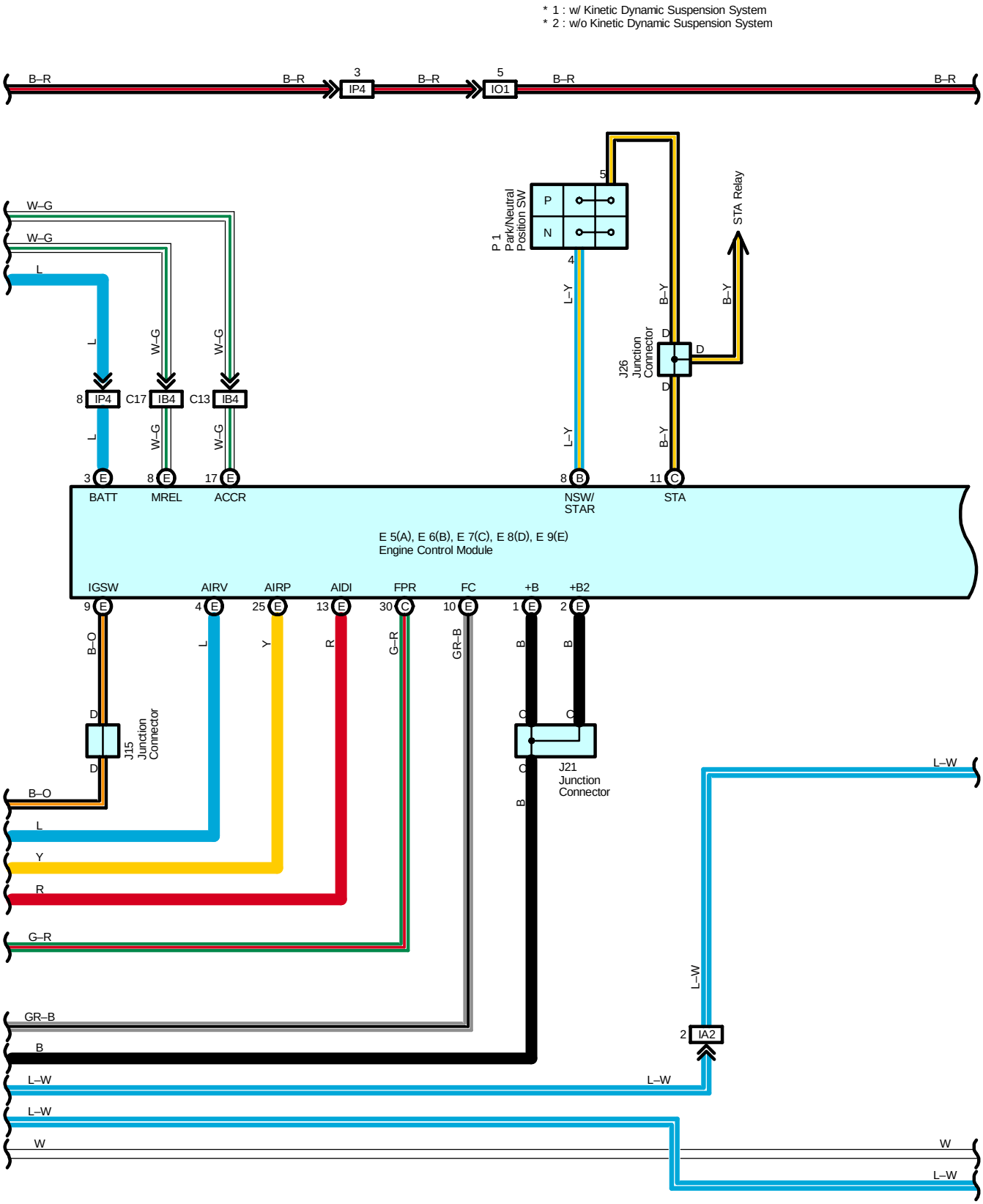
* 1 : w/ Kinetic Dynamic Suspension System
* 2 : w/o Kinetic Dynamic Suspension System
B–R
3
IP4
5
IO1
P 1
Park/Neutral
Position SW
P
N
STA Relay
W–G
L
L–Y
B–Y
J26
Junction
Connector
D
8 IP4
C17 IB4
C13 IB4
3 E
BATT
8 E
MREL
17 E
ACCR
8 B
NSW/
STAR
11 C
STA
E 5(A), E 6(B), E 7(C), E 8(D), E 9(E)
Engine Control Module
IGSW
AIRV
AIRP
AIDI
FPR
FC
+B
+B2
9 E
4 E
25 E
13 E
30 C
10 E
1 E
2 E
B–O
Y
R
G–R
GR–B
B
J15
Junction
Connector
J21
Junction
Connector
L–W
2 IA2
W

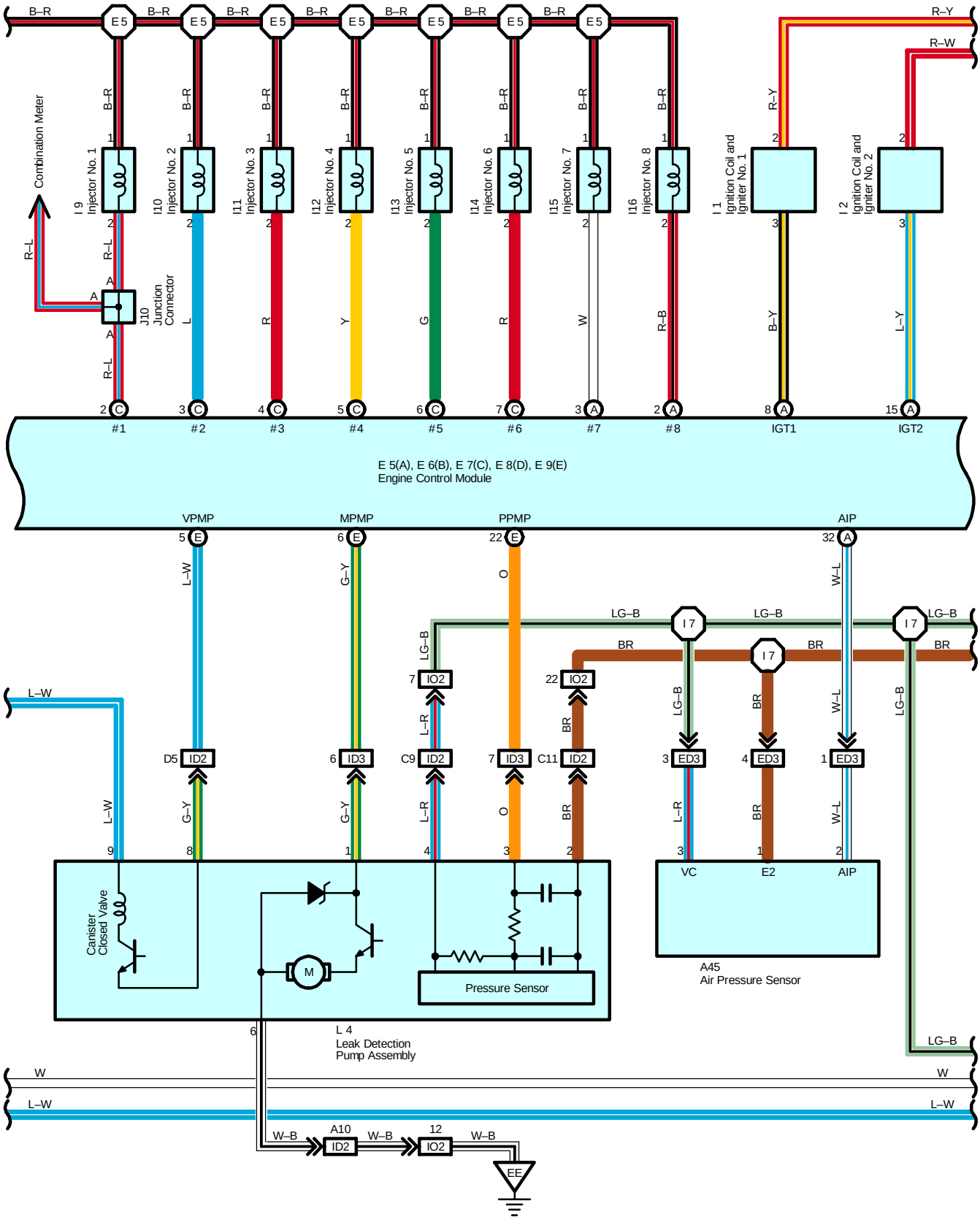
Combination Meter
I 9 Injector No. 1
I10 Injector No. 2
I11 Injector No. 3
I12 Injector No. 4
I13 Injector No. 5
I14 Injector No. 6
I15 Injector No. 7
I16 Injector No. 8
I 1 Ignition Coil and Igniter No. 1
I 2 Ignition Coil and Igniter No. 2
J10 Junction Connector
#1
#2
#3
#4
#5
#6
#7
#8
IGT1
IGT2
E 5(A), E 6(B), E 7(C), E 8(D), E 9(E)
Engine Control Module
VPMP
MPMP
PPMP
AIP
Canister Closed Valve
Pressure Sensor
L 4
Leak Detection Pump Assembly
VC
E2
AIP
A45
Air Pressure Sensor
EE

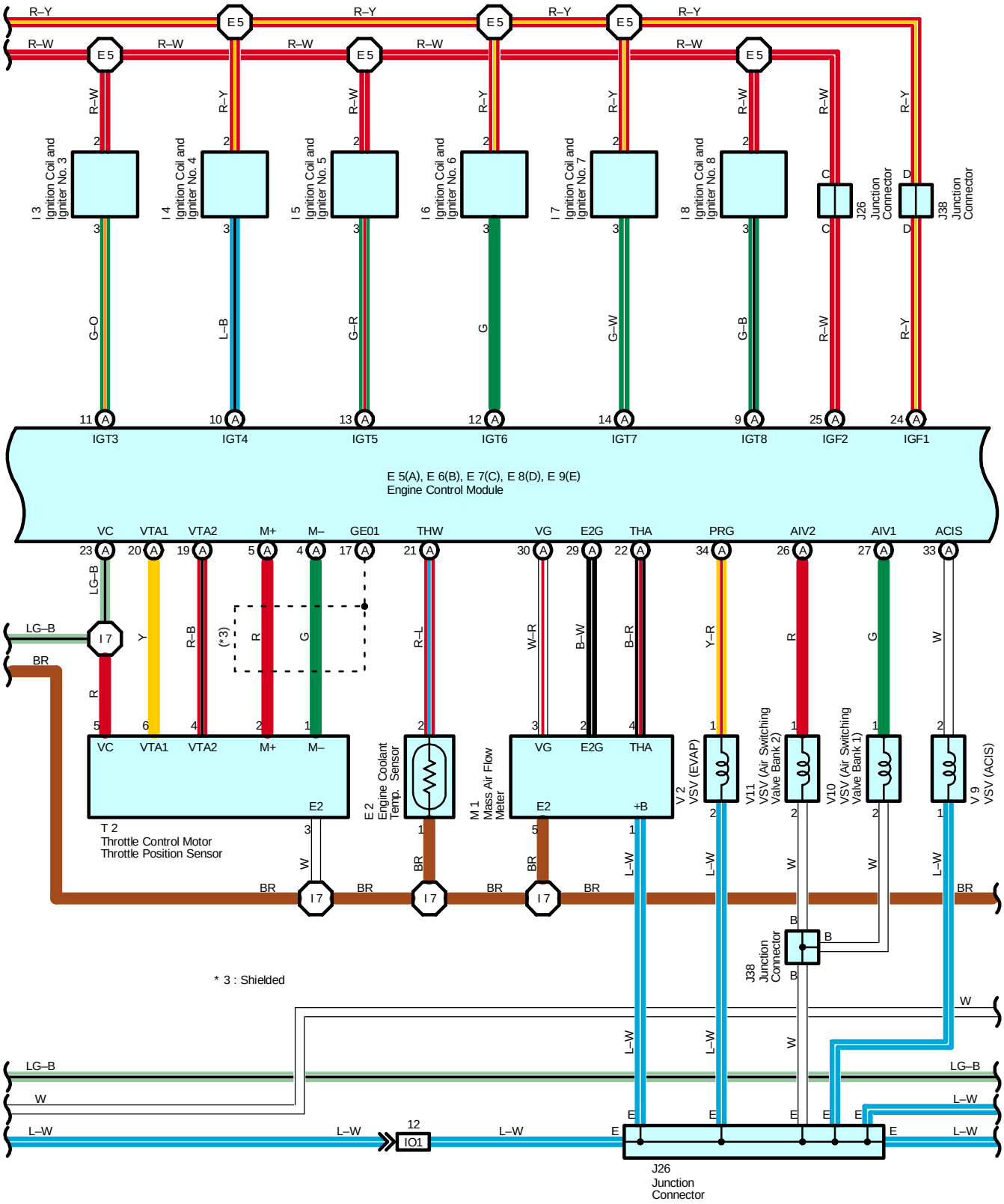
R–Y
R–W
E5
I 3 Ignition Coil and Igniter No. 3
I 4 Ignition Coil and Igniter No. 4
I 5 Ignition Coil and Igniter No. 5
I 6 Ignition Coil and Igniter No. 6
I 7 Ignition Coil and Igniter No. 7
I 8 Ignition Coil and Igniter No. 8
J26 Junction Connector
J38 Junction Connector
G–O
L–B
G–R
G
G–W
G–B
IGT3
IGT4
IGT5
IGT6
IGT7
IGT8
IGF2
IGF1
E 5(A), E 6(B), E 7(C), E 8(D), E 9(E)
Engine Control Module
VC
VTA1
VTA2
M+
M–
GE01
THW
VG
E2G
THA
PRG
AIV2
AIV1
ACIS
LG–B
BR
I 7
Y
R–B
(*3)
R
G
R–L
W–R
B–W
B–R
Y–R
W
T 2
Throttle Control Motor
Throttle Position Sensor
E 2 Engine Coolant Temp. Sensor
M 1 Mass Air Flow Meter
V 2 VSV (EVAP)
V11 VSV (Air Switching Valve Bank 2)
V10 VSV (Air Switching Valve Bank 1)
V 9 VSV (ACIS)
+B
L–W
* 3 : Shielded
IO1
J26 Junction Connector

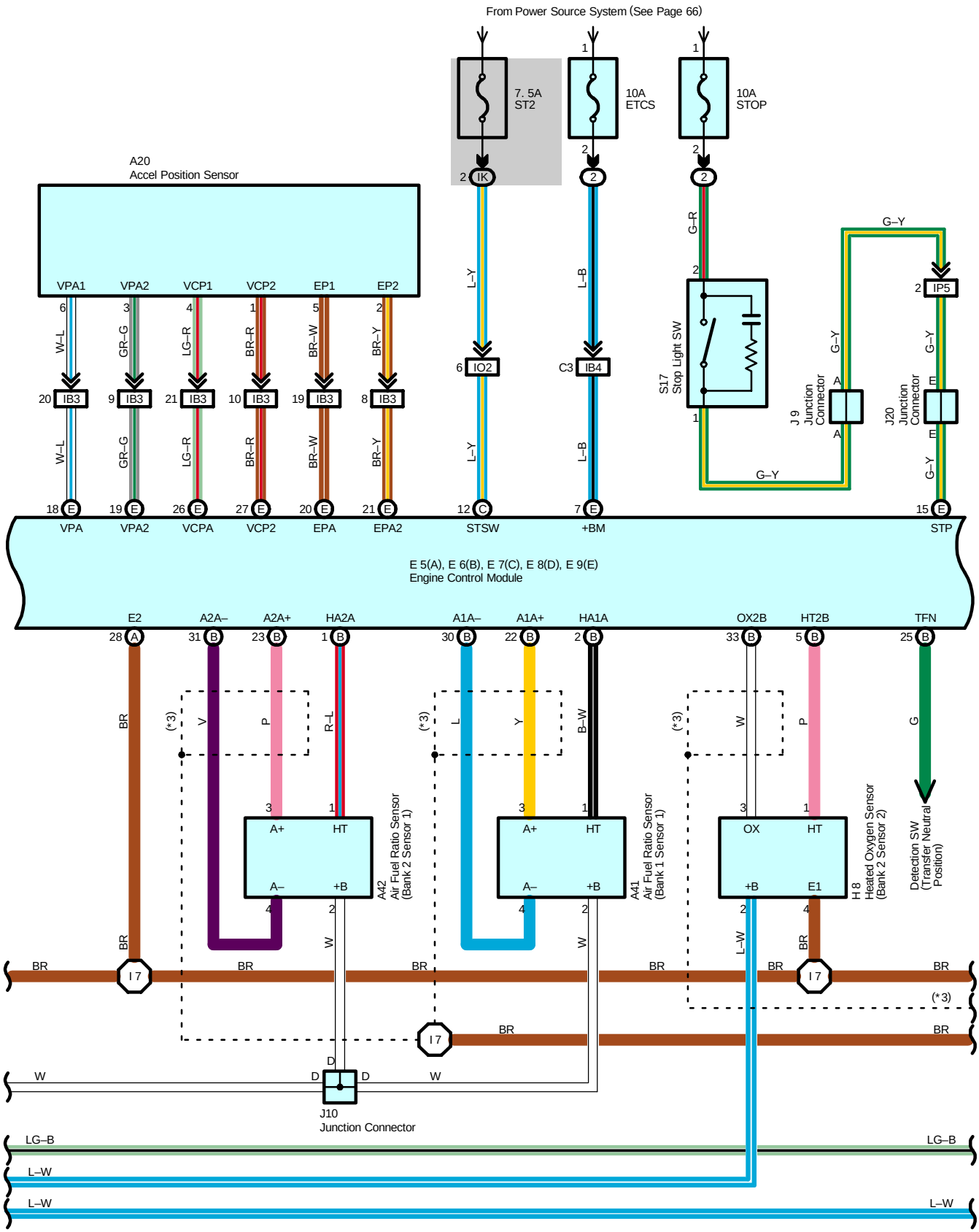
From Power Source System (See Page 66)
7. 5A
ST2
10A
ETCS
10A
STOP
A20
Accel Position Sensor
VPA1
VPA2
VCP1
VCP2
EP1
EP2
W–L
GR–G
LG–R
BR–R
BR–W
BR–Y
IB3
IK
IO2
IB4
IP5
L–Y
L–B
G–R
G–Y
S17
Stop Light SW
J9
Junction
Connector
J20
Junction
Connector
VPA
VPA2
VCPA
VCP2
EPA
EPA2
STSW
+BM
STP
E 5(A), E 6(B), E 7(C), E 8(D), E 9(E)
Engine Control Module
E2
A2A–
A2A+
HA2A
A1A–
A1A+
HA1A
OX2B
HT2B
TFN
BR
V
P
R–L
L
Y
B–W
W
G
(*3)
A42
Air Fuel Ratio Sensor
(Bank 2 Sensor 1)
A41
Air Fuel Ratio Sensor
(Bank 1 Sensor 1)
H8
Heated Oxygen Sensor
(Bank 2 Sensor 2)
Detection SW
(Transfer Neutral
Position)
A+
HT
A–
+B
OX
E1
I7
L–W
J10
Junction Connector
LG–B

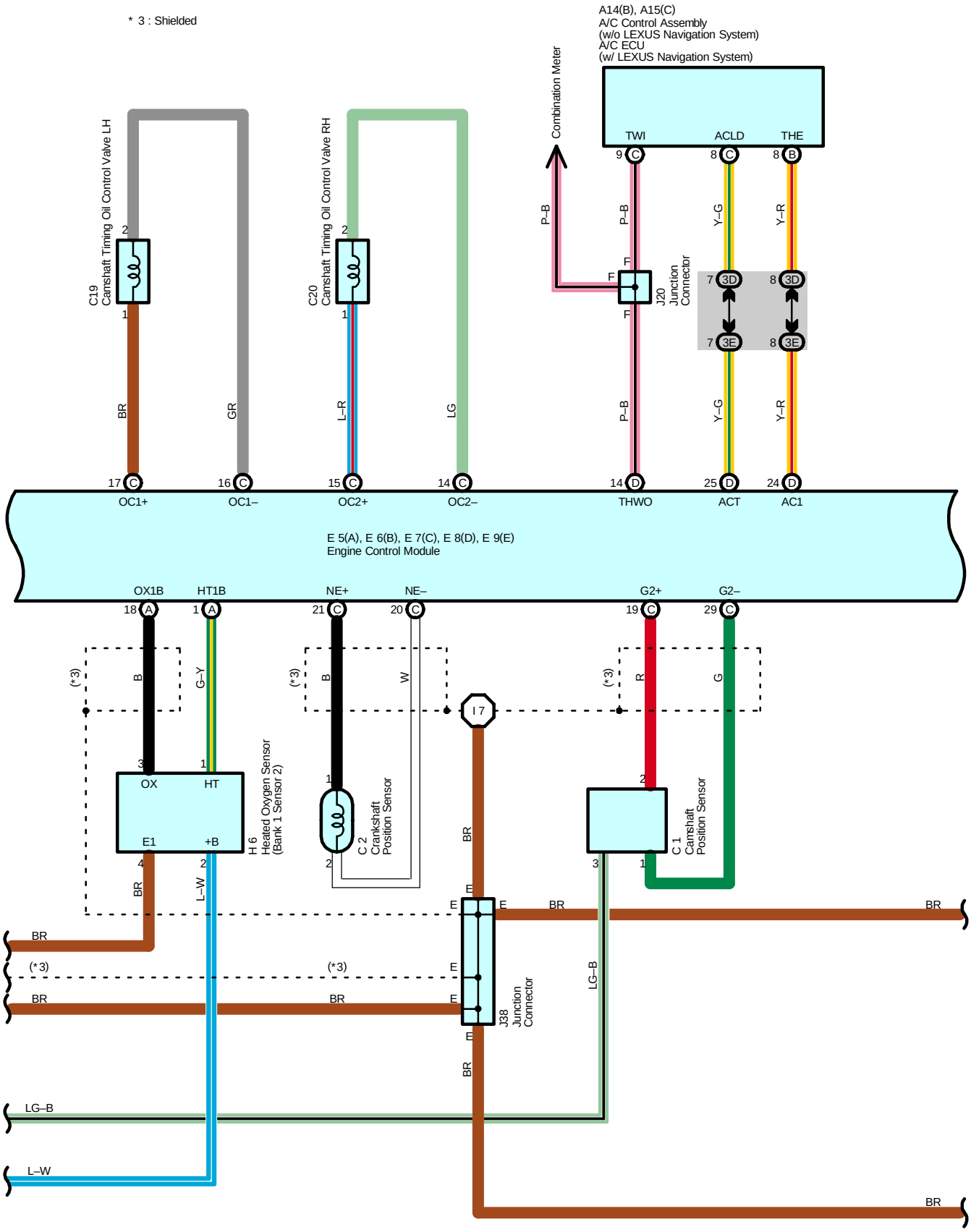
* 3 : Shielded
A14(B), A15(C)
A/C Control Assembly
(w/o LEXUS Navigation System)
A/C ECU
(w/ LEXUS Navigation System)
Combination Meter
TWI
ACLD
THE
C19
Camshaft Timing Oil Control Valve LH
C20
Camshaft Timing Oil Control Valve RH
J20
Junction
Connector
OC1+
OC1–
OC2+
OC2–
THWO
ACT
AC1
E 5(A), E 6(B), E 7(C), E 8(D), E 9(E)
Engine Control Module
OX1B
HT1B
NE+
NE–
G2+
G2–
OX
HT
E1
+B
H 6
Heated Oxygen Sensor
(Bank 1 Sensor 2)
C 2
Crankshaft
Position Sensor
C 1
Camshaft
Position Sensor
I 7
J38
Junction
Connector
(*3)
BR
GR
L–R
LG
P–B
Y–G
Y–R
G–Y
L–W
LG–B
B
W
R
G

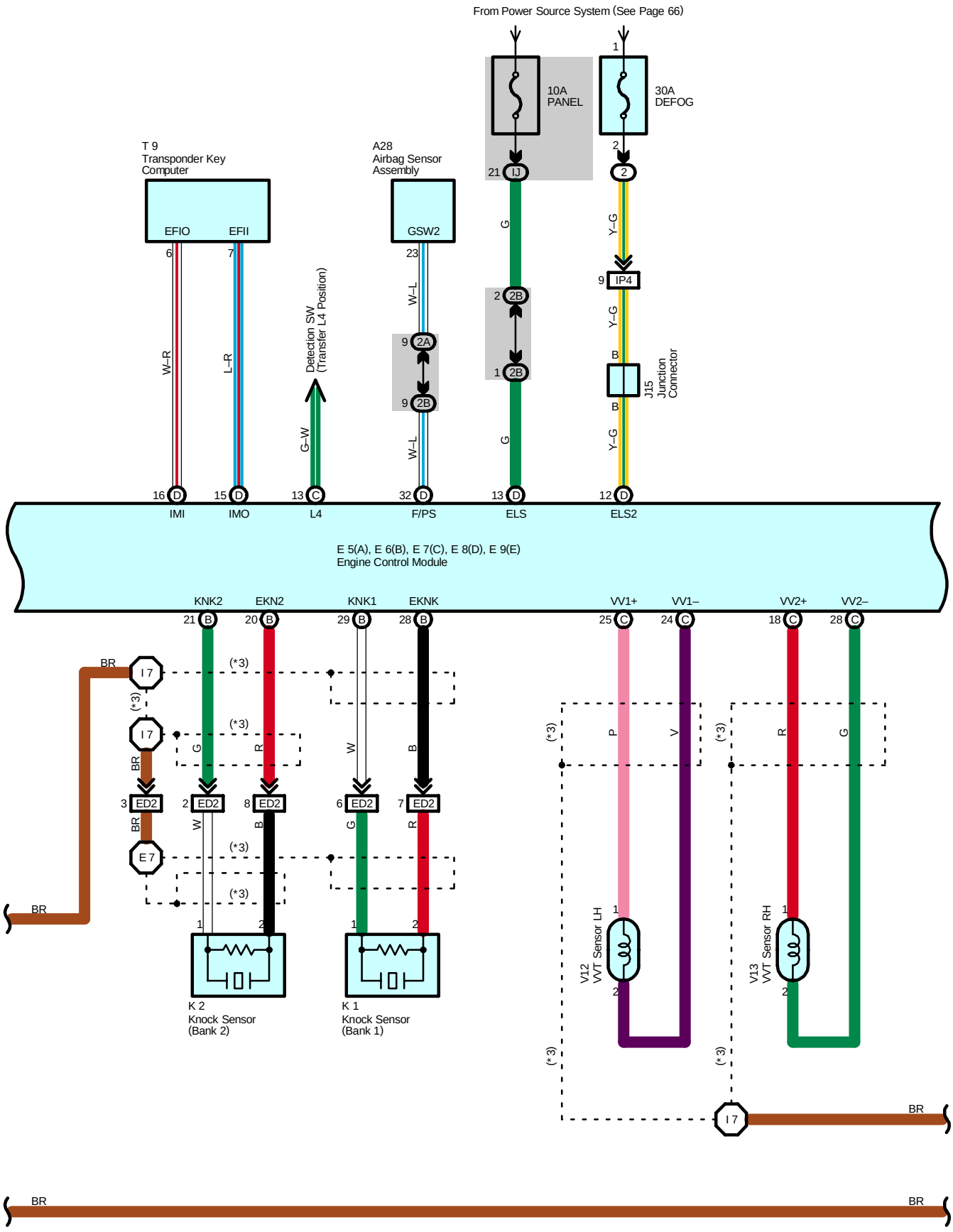
From Power Source System (See Page 66)
10A PANEL
30A DEFOG
T 9 Transponder Key Computer
EFIO
EFII
A28 Airbag Sensor Assembly
GSW2
Detection SW (Transfer L4 Position)
IP4
J15 Junction Connector
IMI
IMO
L4
F/PS
ELS
ELS2
E 5(A), E 6(B), E 7(C), E 8(D), E 9(E) Engine Control Module
KNK2
EKN2
KNK1
EKNK
VV1+
VV1–
VV2+
VV2–
ED2
K 2 Knock Sensor (Bank 2)
K 1 Knock Sensor (Bank 1)
V12 VVT Sensor LH
V13 VVT Sensor RH
BR

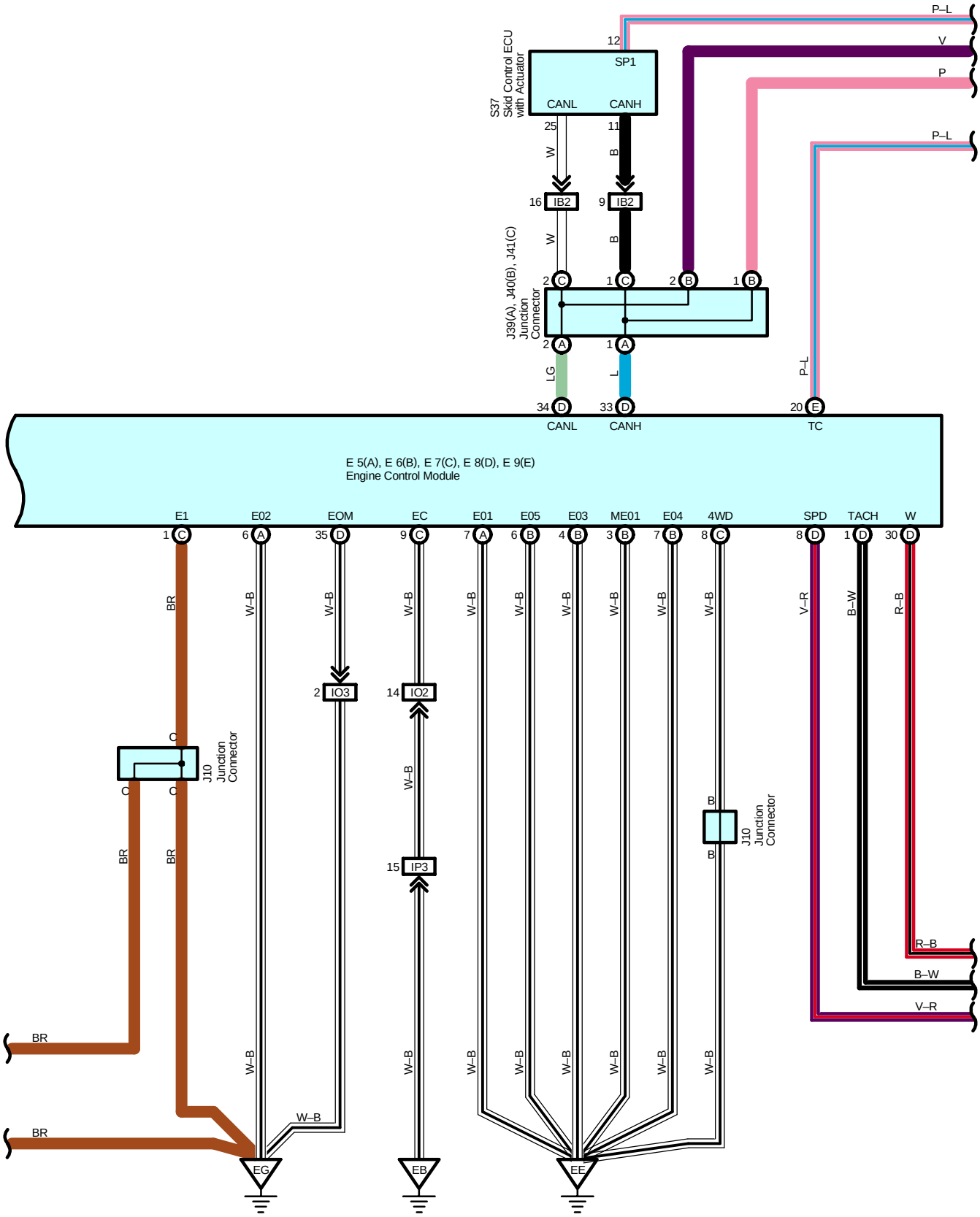
* 3 : Shielded
S37
Skid Control ECU
with Actuator
SP1
CANL
CANH
12
25
11
W
B
16
IB2
9
IB2
J39(A), J40(B), J41(C)
Junction
Connector
2
C
1
C
2
B
1
B
2
A
1
A
LG
L
P–L
34
D
33
D
20
E
CANL
CANH
TC
P–L
V
P
P–L
E 5(A), E 6(B), E 7(C), E 8(D), E 9(E)
Engine Control Module
E1
E02
EOM
EC
E01
E05
E03
ME01
E04
4WD
SPD
TACH
W
1
C
6
A
35
D
9
C
7
A
6
B
4
B
3
B
7
B
8
C
8
D
1
D
30
D
BR
W–B
V–R
B–W
R–B
2
IO3
14
IO2
15
IP3
J10
Junction
Connector
C
C
C
B
B
J10
Junction
Connector
R–B
B–W
V–R
BR
BR
BR
BR
W–B
EG
EB
EE

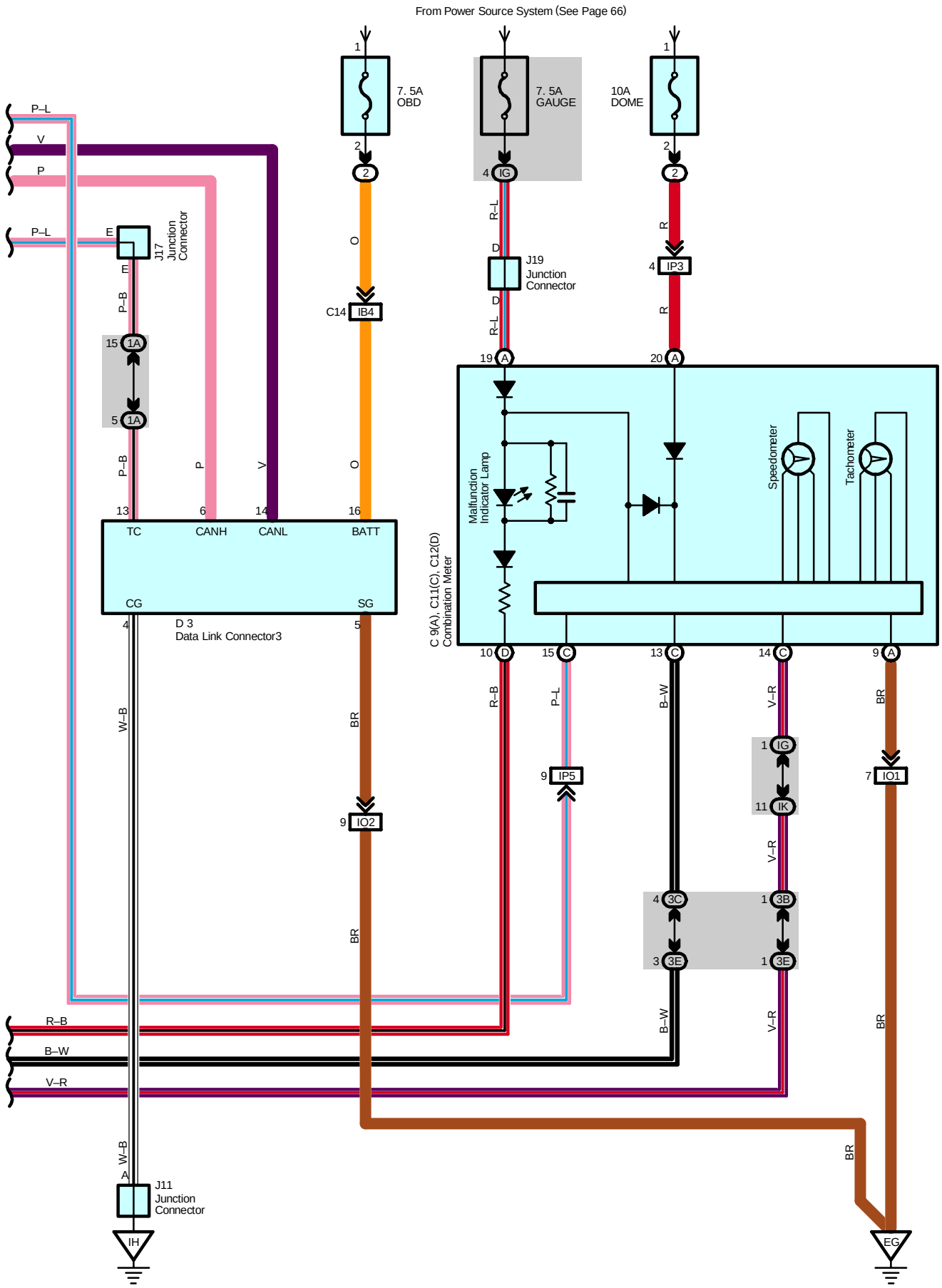
From Power Source System (See Page 66)
7. 5A
OBD
7. 5A
GAUGE
10A
DOME
P–L
V
P
P–L
E
J17
Junction
Connector
E
P–B
15 1A
5 1A
P–B
P
V
O
O
13
6
14
16
TC
CANH
CANL
BATT
CG
SG
4
D 3
Data Link Connector3
5
W–B
BR
BR
C14 IB4
9 IO2
R–L
D
J19
Junction
Connector
D
R–L
19 A
20 A
R
R
4 IP3
Malfunction
Indicator Lamp
Speedometer
Tachometer
C 9(A), C11(C), C12(D)
Combination Meter
10 D
15 C
13 C
14 C
9 A
R–B
P–L
B–W
V–R
BR
9 IP5
1 IG
11 IK
7 IO1
V–R
4 3C
3 3E
1 3B
1 3E
B–W
V–R
BR
R–B
B–W
V–R
W–B
A
J11
Junction
Connector
IH
BR
EG

System Outline

The engine control system utilizes a microcomputer and maintains overall control of the engine, transmission etc. An outline of the engine control is given here.

1. Input Signals

(1) Engine coolant temp. signal circuit

The engine coolant temp. sensor detects the engine coolant temp. and has a built–in thermistor with a resistance which varies according to the engine coolant temp. The engine coolant temp. is input into TERMINAL THW of the engine control module as a control signal.

(2) Intake air temp. signal circuit

The intake air temp. sensor is installed in the mass air flow meter and detects the intake air temp., which is input as a control signal to TERMINAL THA of the engine control module.

(3) Oxygen sensor signal circuit

The oxygen density in the exhaust emission is detected and is input as a control signal from the heated oxygen sensors to TERMINALS OX1B, OX2B of the engine control module.

(4) RPM signal circuit

The camshaft position is detected by the camshaft position sensor and is input into TERMINAL G2+ of the engine control module as a control signal. Also, the engine RPM is detected by the crankshaft position sensor and the signal is input into TERMINAL NE+ of the engine control module.

(5) Throttle position sensor signal circuit

The throttle position sensor detects the throttle valve opening angle as a control signal, which is input into TERMINALS VTA1 and VTA2 of the engine control module.

(6) Vehicle speed circuit

The vehicle speed sensor detects the vehicle speed, and the signal is input into TERMINAL SPD of the engine control module via the combination meter, from TERMINAL SP1 of the skid control ECU with actuator.

(7) Battery signal circuit

Voltage is constantly applied to TERMINAL BATT of the engine control module. When the ignition SW is turned on, the voltage for engine control module start up power supply is applied through the EFI relay, to TERMINALS +B and +B2 of the engine control module. The current from the IGN fuse flows to TERMINAL IGSW of the engine control module, and voltage is constantly applied to TERMINAL +BM.

(8) Intake air volume signal circuit

The intake air volume is detected by the mass air flow meter, and is input as a control signal to TERMINAL VG of the engine control module.

(9) Stop light SW signal circuit

The stop light SW is used to detect whether the vehicle is braking or not, and the signal is input into TERMINAL STP of the engine control module as a control signal.

(10) Starter signal circuit

To confirm whether the engine is cranking, the voltage applied to the starter motor when the engine is cranking is detected, and is input into TERMINAL STA of the engine control module as a control signal.

(11) Engine knock signal circuit

Engine knocking is detected by the knock sensors, and is input into TERMINALS KNK1 and KNK2 of the engine control module as a control signal.

(12) Air fuel ratio signal system

The air fuel ratio is detected by air fuel ratio sensor and input as a control signal into TERMINALS A1A+, A2A+ of engine control module.

2. Control System

∗ SFI system
The SFI system monitors the engine condition through the signals input from each sensors to the engine control module. The control signal is sent to the engine control module TERMINALS #1, #2, #3, #4, #5, #6, #7 and #8 to operate the injector (Fuel injection). The SFI system controls the fuel injection by the engine control module in response to the driving conditions.

∗ ESA system
The ESA system monitors the engine condition through the signals input from each sensors to the engine control module. The best ignition timing is decided according to this data and the data memorized in the engine control module. The control signal is output to TERMINALS IGT1, IGT2, IGT3, IGT4, IGT5, IGT6, IGT7 and IGT8, and these signals control the igniter to provide the best ignition timing.

∗ Heated oxygen sensor heater control system
The heated oxygen sensor heater control system turns the heater on when the intake air volume is low (Temp. of exhaust emission is low), and warms up the heated oxygen sensors to improve their detection performance. The engine control module evaluates the signals from each sensors, and outputs current to TERMINALS HT1B, HT2B to control the heater.

∗ Air fuel ratio sensor heater control system
The air fuel ratio sensor heater control system turns the heater on when the intake air volume is low (Temp. of exhaust emission is low), and warms up the air fuel ratio sensor to improve detection performance of the sensor.
The engine control module evaluates the signals from each sensor, current is output to TERMINALS HA1A and HA2A, controlling the heater.

∗ Fuel pump control system
The engine control module supplies current to TERMINAL FPR, and controls the operation speed of the fuel pump with the FUEL PUMP relay.

∗ ACIS
The ACIS includes a valve in the bulkhead separating the surge tank into two parts. This valve is opened and closed in accordance with the driving conditions to control the intake manifold length in two stages, for increased engine output in all ranges from low to high speeds.

∗ ETCS–i
The ETCS–i controls the engine output at its optimal level in accordance with the opening of the accelerator pedal, under all driving conditions.

∗ Engine start control system
The engine control module allows power to be supplied from the TERMINAL STA to the STA relay via park/neutral position SW until complete combustion is confirmed by engine RPM after the detection of ignition SW ST signal by the TERMINAL STSW.
With this arrangement, engine can be started without holding the ignition key in the ST position. At the same time, the TERMINAL ACCR is controlled so that the engine control module turns off ACC CUT relay, shutting off power to the accessories.

∗ VVT–i
Controls the intake camshaft to an optimal valve timing in accordance with the engine condition.

∗ Air Injection System
It is the system to improve exhaust control performance by activating catalyst at early stage, which is realized when air is pressed and sent into the exhaust pipe forcibly by the air injection pump at starting engine in cold condition.

3. Diagnosis System

When there is a malfunction in the engine control module signal system, the malfunctioning system is recorded in the memory. The malfunctioning system can be found by reading the code displayed on the malfunction indicator lamp.

4. Fail–Safe System

When a malfunction has occurred in any system, there is a possibility of causing engine trouble due to continued control based on that system. In that case, the fail–safe system either controls the system using the data (Standard values) recorded in the engine control module memory, or else stops the engine.

Service Hints

EFI Relay

5–3 : Closed with the ignition SW at ON position

E2 Engine Coolant Temp. Sensor

1–2 : Approx. 15.0 kΩ (–20˚C, –4˚F)
: Approx. 2.45 kΩ (20˚C, 68˚F)
: Approx. 0.32 kΩ (80˚C, 176˚F)
: Approx. 0.14 kΩ (110˚C, 230˚F)

E5 (A), E6 (B), E7 (C), E8 (D), E9 (E) Engine Control Module

BATT–E1 : Always 9.0–14.0 volts
+BM–E1 : Always 9.0–14.0 volts
IGSW–E1 : 9.0–14.0 volts with the ignition SW at ON position
+B, +B2–E1 : 9.0–14.0 volts with the ignition SW at ON position
VC–E1 : 4.5–5.5 volts with the ignition SW at ON position
VTA2–E1 : 2.0–2.9 volts with the ignition SW on and throttle valve fully closed
: 4.7–5.1 volts with the ignition SW on and throttle valve fully open
VTA1–E1 : 0.4–1.0 volts with the ignition SW on and throttle valve fully closed
: 3.2–4.8 volts with the ignition SW on and throttle valve fully open
VPA–E1 : 0.3–0.9 volts with the ignition SW on and throttle valve fully closed
: 3.2–4.8 volts with the ignition SW on and throttle valve fully open
VPA2–E1 : 1.8–2.7 volts with the ignition SW on and throttle valve fully closed
: 4.7–5.1 volts with the ignition SW on and throttle valve fully open
THA–E1 : 0.5–3.4 volts with the idling, intake air temp. 0˚C (32˚F) –80˚C (176˚F)
THW–E1 : 0.2–1.0 volts with the idling, engine coolant temp. 60˚C (140˚F) –120˚C (248˚F)
STA–E1 : 6.0 volts or more with the engine cranking
W–E1 : 9.0–14.0 volts with the idling and malfunction indicator lamp off
SPD–E1 : Pulse generation with the vehicle moving
STP–E1 : 7.5–14.0 volts with the brake pedal depressed

○ : **Parts Location**

Code		See Page	Code		See Page	Code		See Page
A14	B	38	F15		43	J15		40
A15	C	38	H6		36	J17		40
A20		38	H8		36	J19		40
A28		38	I1		37	J20		40
A41		36	I2		37	J21		40
A42		36	I3		37	J26		40
A43	A	36	I4		37	J32		43
A44	B	36	I5		37	J38		40
A45		36	I6		37	J39	A	40
A46		36	I7		37	J40	B	40
A47		36	I8		37	J41	C	40
C1		36	I9		37	K1		37
C2		36	I10		37	K2		37
C9	A	38	I11		37	L4		43
C11	C	38	I12		37	M1		37
C12	D	38	I13		37	P1		37
C19		36	I14		37	S17		41
C20		36	I15		37	S37		37
D3		39	I16		37	T2		37
E2		36	I18		39	T9		41
E5	A	39	J2	A	37	V2		37
E6	B	39	J3	B	37	V9		37
E7	C	39	J5		37	V10		37
E8	D	39	J9		40	V11		37
E9	E	39	J10		40	V12		37
F6		36	J11		40	V13		37

: **Relay Blocks**

Code	See Page	Relay Blocks (Relay Block Location)
2	22	Engine Room R/B (Engine Compartment Left)

: **Junction Block and Wire Harness Connector**

Code	See Page	Junction Block and Wire Harness (Connector Location)
ID	26	Engine Room Main Wire and Driver Side J/B (Lower Finish Panel)
IE		
IG	27	Instrument Panel Wire and Driver Side J/B (Lower Finish Panel)
IJ		
IK		
1A	30	Instrument Panel Wire and J/B No.1 (Instrument Panel Reinforcement Left)
2A	32	Instrument Panel Wire and J/B No.2 (Instrument Panel Reinforcement Center)
2B		
3B	34	Instrument Panel Wire and J/B No.3 (Instrument Panel Reinforcement Right)
3C		
3D		
3E		

: **Connector Joining Wire Harness and Wire Harness**

Code	See Page	Joining Wire Harness and Wire Harness (Connector Location)
EB2	48	Engine No.2 Wire and Engine Room Main Wire (Near the Engine Room R/B)
ED2	48	Engine No.2 Wire and Engine Wire (Near the Starter)
ED3		
IA2	50	Floor No.2 Wire and Engine Room Main Wire (Left Kick Panel)
IB2	50	Instrument Panel Wire and Engine Room Main Wire (Left Kick Panel)
IB3		
IB4		
ID2	50	Instrument Panel Wire and Floor No.2 Wire (Left Kick Panel)
ID3		
IO1	54	Engine Wire and Instrument Panel Wire (Right Side of the Blower Unit)
IO2		
IO3		
IP3	54	Instrument Panel Wire and Engine Room Main Wire (Right Kick Panel)
IP4		
IP5		

: **Ground Points**

Code	See Page	Ground Points Location
EB	48	Front Left Fender
EE	48	Rear Bank of Left Cylinder Head
EG		
ES	48	Near the Starter
IH	50	Left Kick Panel
BM	58	Under the Driver's Seat
BP	58	Left Quarter Panel Inner

: **Splice Points**

Code	See Page	Wire Harness with Splice Points	Code	See Page	Wire Harness with Splice Points
E5	48	Engine Wire	I1	52	Engine Room Main Wire
E7	48	Engine No.2 Wire	I7	52	Engine Wire

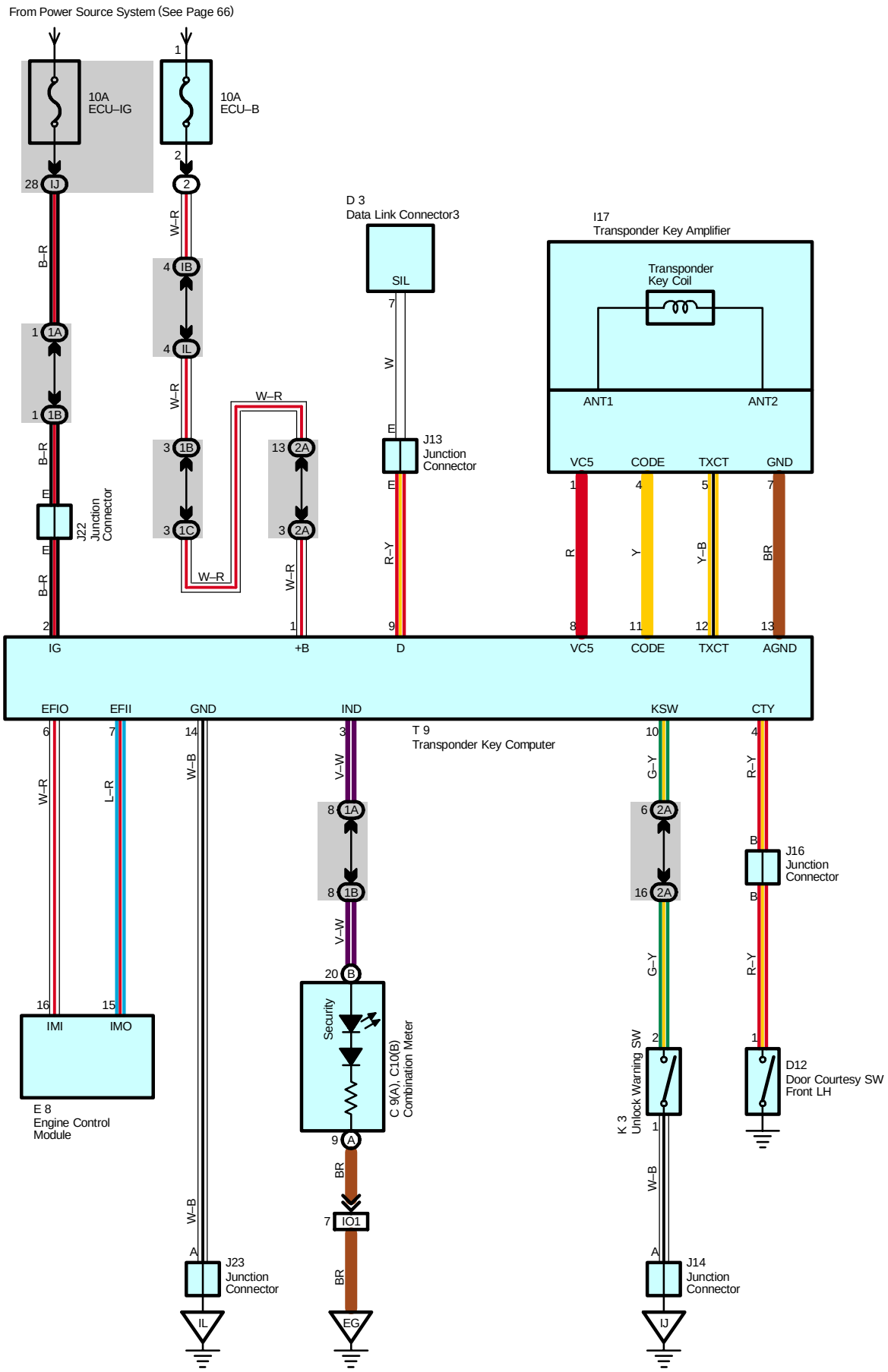
From Power Source System (See Page 66)
10A
ECU–IG
10A
ECU–B
28 IJ
B–R
1 1A
1 1B
B–R
E
J22
Junction
Connector
E
B–R
2
IG
W–R
4 IB
4 IL
W–R
3 1B
3 1C
W–R
W–R
13 2A
3 2A
W–R
1
+B
D 3
Data Link Connector3
SIL
7
W
E
J13
Junction
Connector
E
R–Y
9
D
I17
Transponder Key Amplifier
Transponder
Key Coil
ANT1
ANT2
VC5
CODE
TXCT
GND
1
4
5
7
R
Y
Y–B
BR
8
11
12
13
VC5
CODE
TXCT
AGND
EFIO
EFII
GND
IND
KSW
CTY
6
7
14
3
10
4
W–R
L–R
W–B
V–W
G–Y
R–Y
8 1A
8 1B
V–W
20 B
6 2A
16 2A
B
J16
Junction
Connector
B
G–Y
R–Y
16
15
IMI
IMO
E 8
Engine Control
Module
Security
C 9(A), C10(B)
Combination Meter
9 A
BR
7 IO1
BR
W–B
A
J23
Junction
Connector
IL
EG
T 9
Transponder Key Computer
2
1
K 3
Unlock Warning SW
W–B
A
J14
Junction
Connector
IJ
D12
Door Courtesy SW
Front LH

Service Hints

T9 Transponder Key Computer

1–Ground : Always approx. 12 volts
14–Ground : Always continuity
2–Ground : Approx. 12 volts with the ignition SW at ON position

: Parts Location

Code		See Page	Code	See Page	Code	See Page
C9	A	38	I17	39	J23	40
C10	B	38	J13	40	K3	40
D3		39	J14	40	T9	41
D12		42	J16	40		
E8		39	J22	40		

: Relay Blocks

Code	See Page	Relay Blocks (Relay Block Location)
2	22	Engine Room R/B (Engine Compartment Left)

: Junction Block and Wire Harness Connector

Code	See Page	Junction Block and Wire Harness (Connector Location)
IB	26	Engine Room Main Wire and Driver Side J/B (Lower Finish Panel)
IJ	27	Instrument Panel Wire and Driver Side J/B (Lower Finish Panel)
IL		
1A	30	Instrument Panel Wire and J/B No.1 (Instrument Panel Reinforcement Left)
1B		
1C		
2A	32	Instrument Panel Wire and J/B No.2 (Instrument Panel Reinforcement Center)

: Connector Joining Wire Harness and Wire Harness

Code	See Page	Joining Wire Harness and Wire Harness (Connector Location)
IO1	54	Engine Wire and Instrument Panel Wire (Right Side of the Blower Unit)

: Ground Points

Code	See Page	Ground Points Location
EG	48	Rear Bank of Left Cylinder Head
IJ	50	Near the Right Side of Steering Column
IL	50	Right Kick Panel

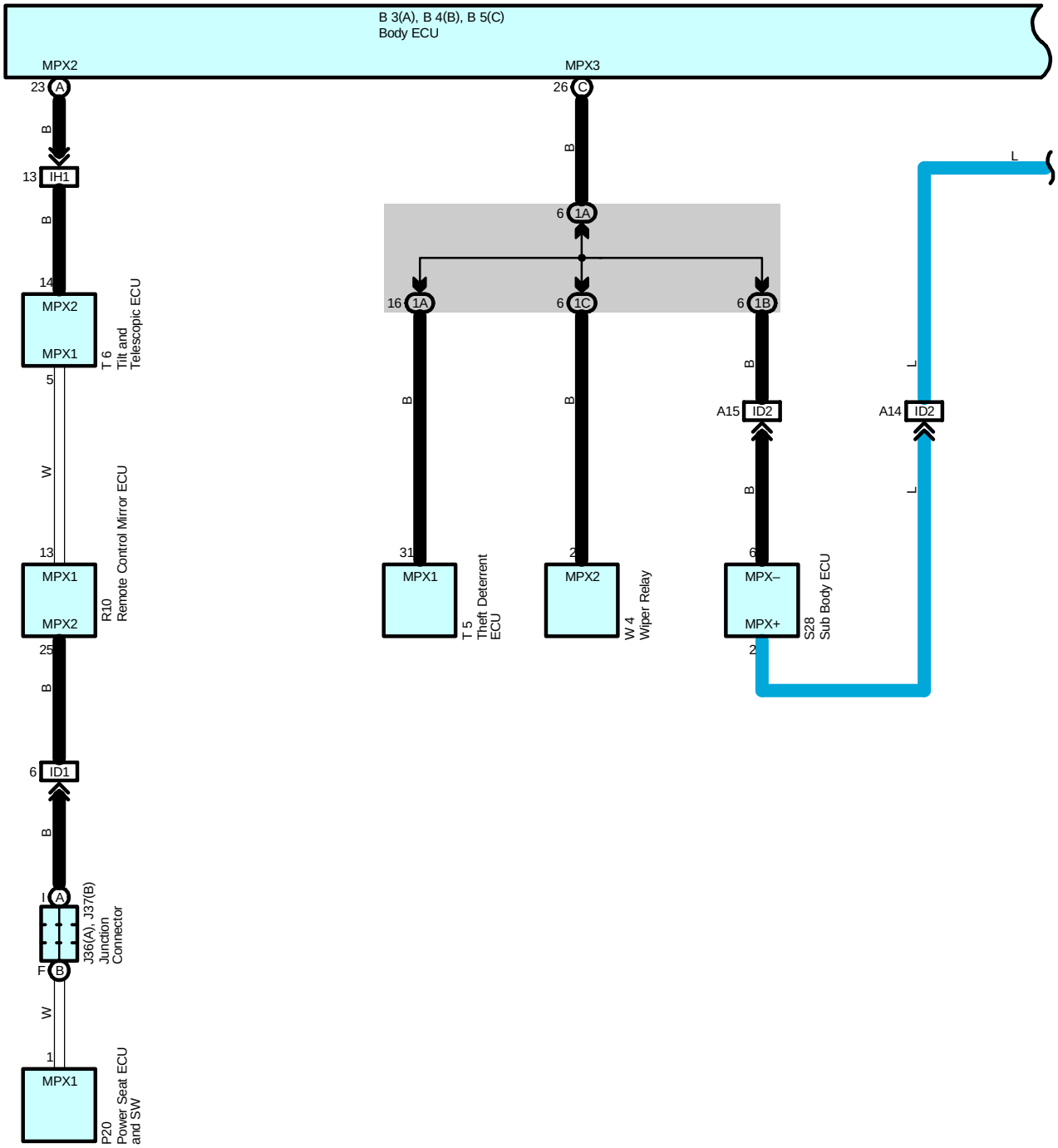
B 3(A), B 4(B), B 5(C)
Body ECU
MPX2
MPX3
23 A
26 C
B
13 IH1
6 1A
14
MPX2
MPX1
T 6
Tilt and
Telescopic ECU
16 1A
6 1C
6 1B
L
5
W
13
MPX1
MPX2
R10
Remote Control Mirror ECU
A15 ID2
A14 ID2
31
MPX1
T 5
Theft Deterrent
ECU
2
MPX2
W 4
Wiper Relay
6
MPX–
MPX+
S28
Sub Body ECU
25
6 ID1
I A
F B
J36(A), J37(B)
Junction
Connector
1
MPX1
P20
Power Seat ECU
and SW

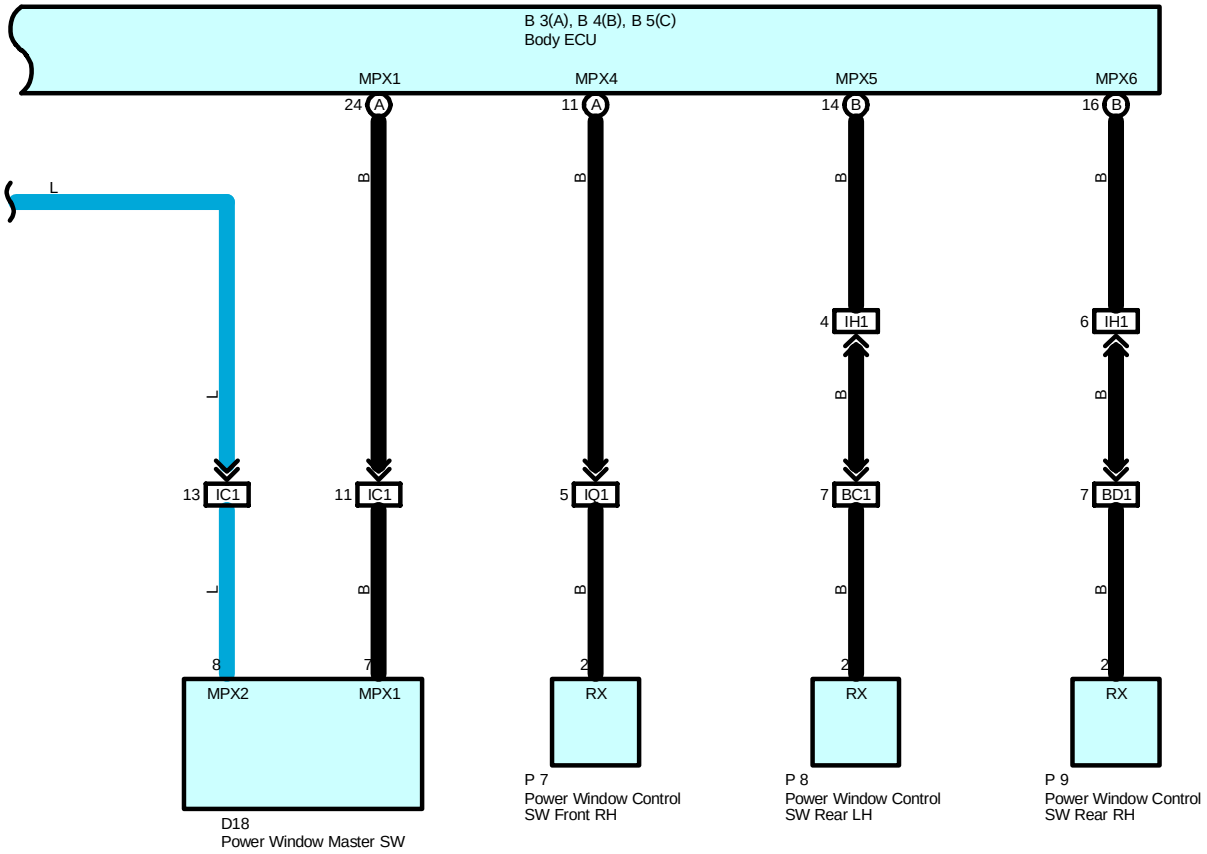
B 3(A), B 4(B), B 5(C)
Body ECU
MPX1
MPX4
MPX5
MPX6
24 A
11 A
14 B
16 B
L
B
4 IH1
6 IH1
13 IC1
11 IC1
5 IQ1
7 BC1
7 BD1
8
7
2
MPX2
MPX1
RX
D18
Power Window Master SW
P 7
Power Window Control
SW Front RH
P 8
Power Window Control
SW Rear LH
P 9
Power Window Control
SW Rear RH

Multiplex Communication System – BEAN Bus

Multiplex Communication System Includes Following Systems

- ∗ **Automatic Light Control**
- ∗ **Door Lock Control**
- ∗ **Garage Door Opener**
- ∗ **Headlight**
- ∗ **Interior Light**
- ∗ **Key Reminder**
- ∗ **Light Auto Turn Off System**
- ∗ **Power Window**
- ∗ **Rear Wiper and Washer**
- ∗ **Theft Deterrent**
- ∗ **Wireless Door Lock Control**

○ : **Parts Location**

Code		See Page	Code		See Page	Code	See Page
B3	A	38	J37	B	46	R10	41
B4	B	38	P7		44	S28	45
B5	C	38	P8		44	T5	41
D18		42	P9		44	T6	41
J36	A	46	P20		46	W4	41

: **Junction Block and Wire Harness Connector**

Code	See Page	Junction Block and Wire Harness (Connector Location)
1A	30	Instrument Panel Wire and J/B No.1 (Instrument Panel Reinforcement Left)
1B		
1C		

: **Connector Joining Wire Harness and Wire Harness**

Code	See Page	Joining Wire Harness and Wire Harness (Connector Location)
IC1	50	Front Door LH Wire and Instrument Panel Wire (Left Kick Panel)
ID1	50	Instrument Panel Wire and Floor No.2 Wire (Left Kick Panel)
ID2		
IH1	52	Instrument Panel Wire and Instrument Panel Wire (Near the J/B No.1)
IQ1	56	Front Door RH Wire and Instrument Panel Wire (Right Kick Panel)
BC1	58	Rear Door LH Wire and Instrument Panel Wire (Center Pillar LH)
BD1	58	Rear Door RH Wire and Instrument Panel Wire (Center Pillar RH)

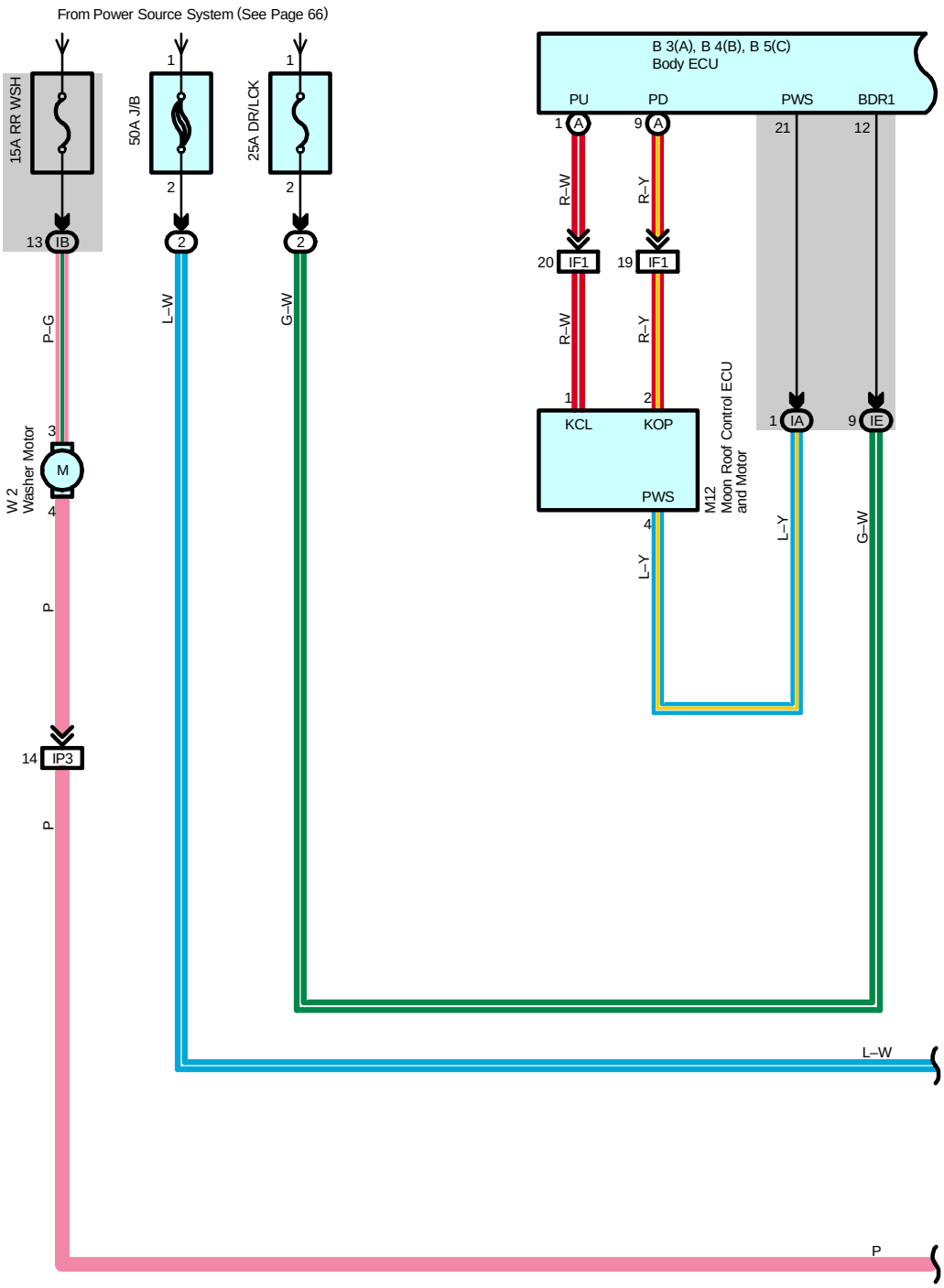
From Power Source System (See Page 66)
15A RR WSH
50A J/B
25A DR/LCK
B 3(A), B 4(B), B 5(C)
Body ECU
PU
PD
PWS
BDR1
13 IB
20 IF1
19 IF1
KCL
KOP
PWS
M12
Moon Roof Control ECU
and Motor
W 2
Washer Motor
14 IP3
P–G
L–W
G–W
R–W
R–Y
L–Y
P

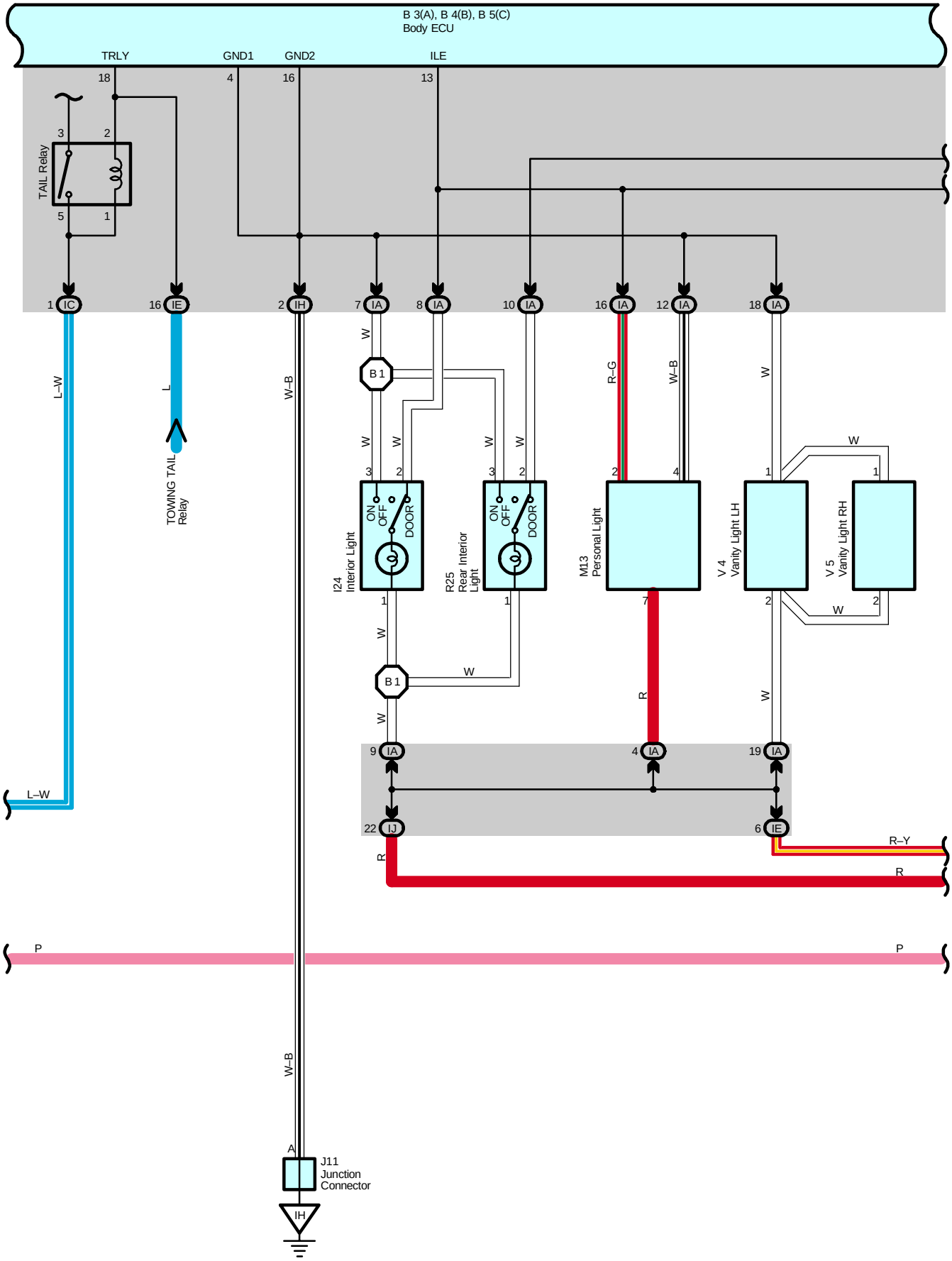
B 3(A), B 4(B), B 5(C)
Body ECU
TRLY
GND1
GND2
ILE
TAIL Relay
TOWING TAIL Relay
I24 Interior Light
R25 Rear Interior Light
M13 Personal Light
V 4 Vanity Light LH
V 5 Vanity Light RH
ON
OFF
DOOR
J11 Junction Connector
L–W
L
W–B
W
R–G
R
R–Y
P

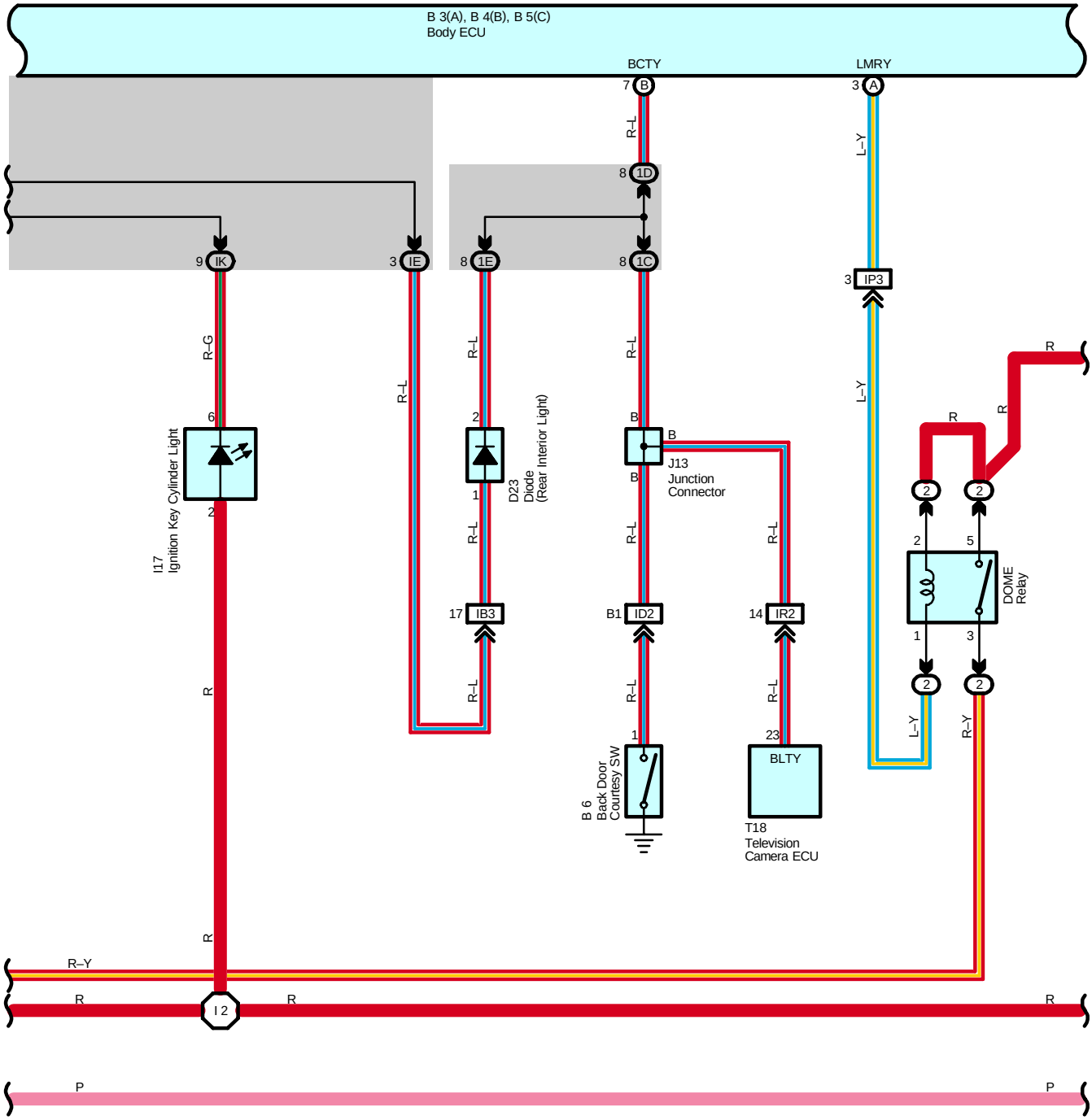
B 3(A), B 4(B), B 5(C)
Body ECU
BCTY
LMRY
7 B
3 A
R–L
L–Y
8 1D
9 IK
3 IE
8 1E
8 1C
3 IP3
R–G
R–L
R–L
R–L
L–Y
R
R
R
6
2
I17
Ignition Key Cylinder Light
2
1
D23
Diode
(Rear Interior Light)
B
B
J13
Junction
Connector
B
R–L
R–L
2
2
2
5
DOME
Relay
1
3
17 IB3
B1 ID2
14 IR2
R–L
R–L
R–L
R–L
2
2
L–Y
R–Y
1
23
BLTY
B 6
Back Door
Courtesy SW
T18
Television
Camera ECU
R
R–Y
R
I 2
R
R
P
P

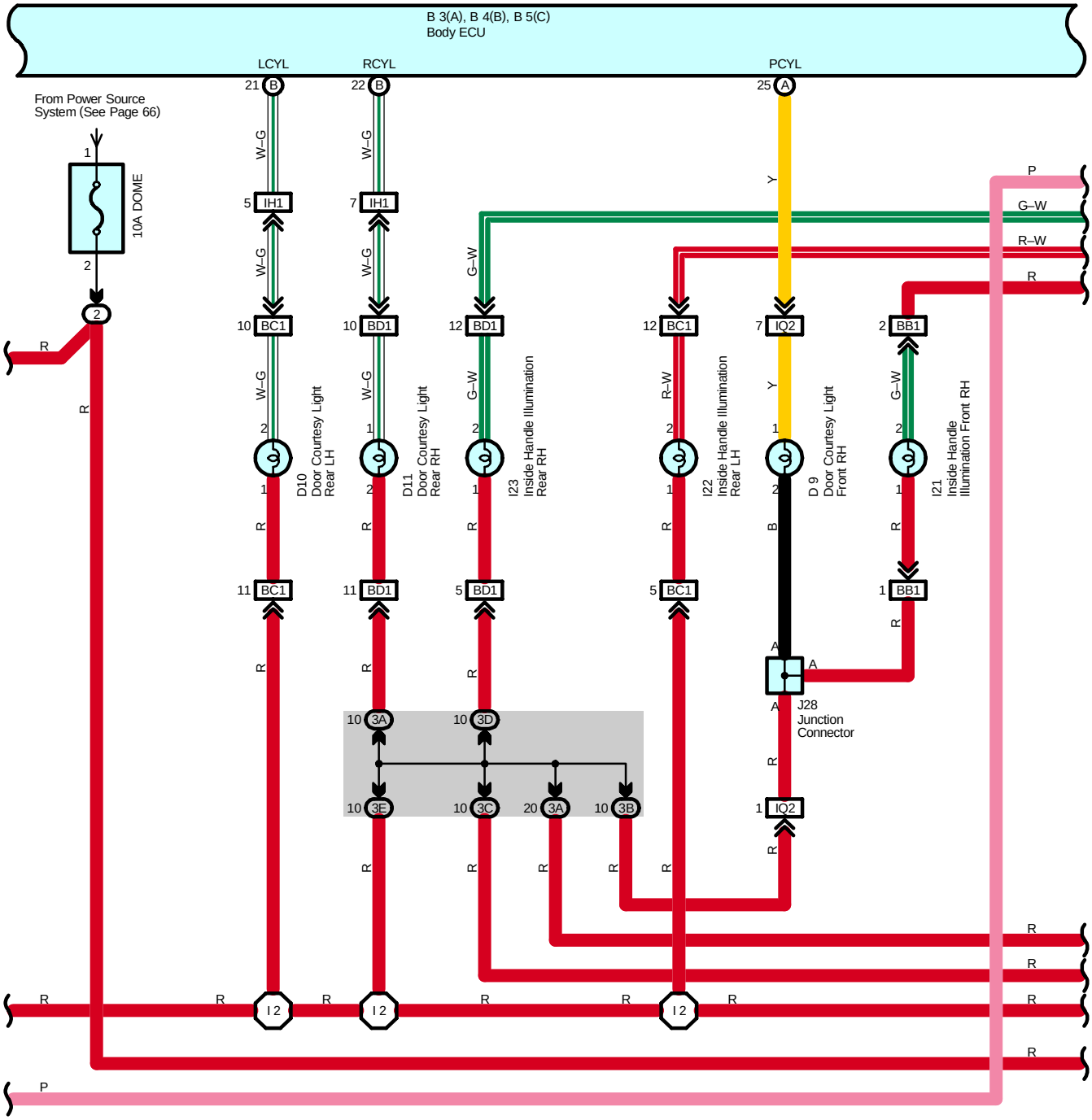
B 3(A), B 4(B), B 5(C)
Body ECU
LCYL
RCYL
PCYL
From Power Source System (See Page 66)
10A DOME
D10 Door Courtesy Light Rear LH
D11 Door Courtesy Light Rear RH
I23 Inside Handle Illumination Rear RH
I22 Inside Handle Illumination Rear LH
D 9 Door Courtesy Light Front RH
I21 Inside Handle Illumination Front RH
J28 Junction Connector

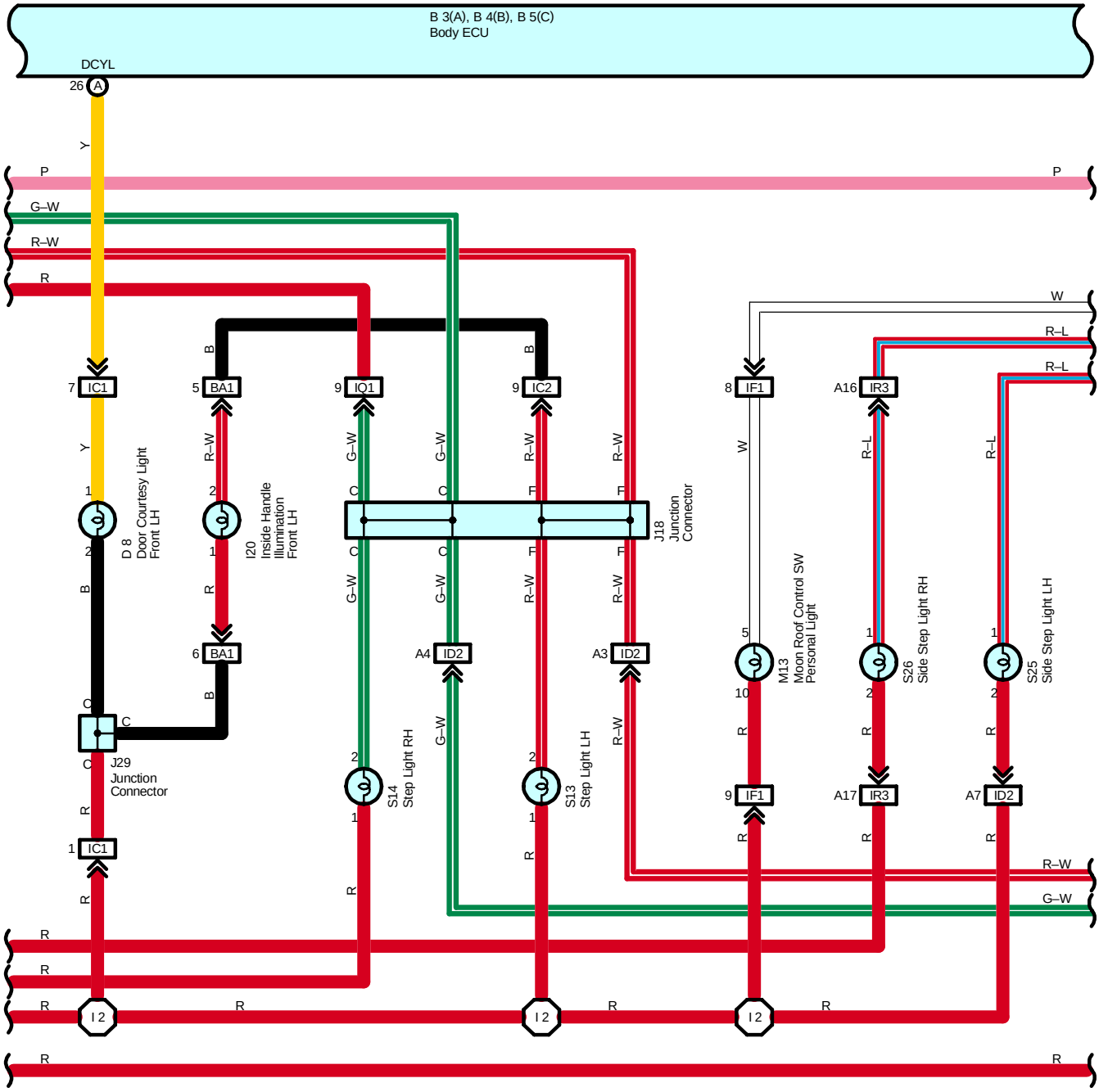
B 3(A), B 4(B), B 5(C)
Body ECU
DCYL
26 A
P
G–W
R–W
R
W
R–L
7 IC1
5 BA1
9 IQ1
9 IC2
8 IF1
A16 IR3
D 8
Door Courtesy Light
Front LH
I20
Inside Handle
Illumination
Front LH
J18
Junction
Connector
M13
Moon Roof Control SW
Personal Light
S26
Side Step Light RH
S25
Side Step Light LH
6 BA1
A4 ID2
A3 ID2
J29
Junction
Connector
S14
Step Light RH
S13
Step Light LH
9 IF1
A17 IR3
A7 ID2
1 IC1
I 2

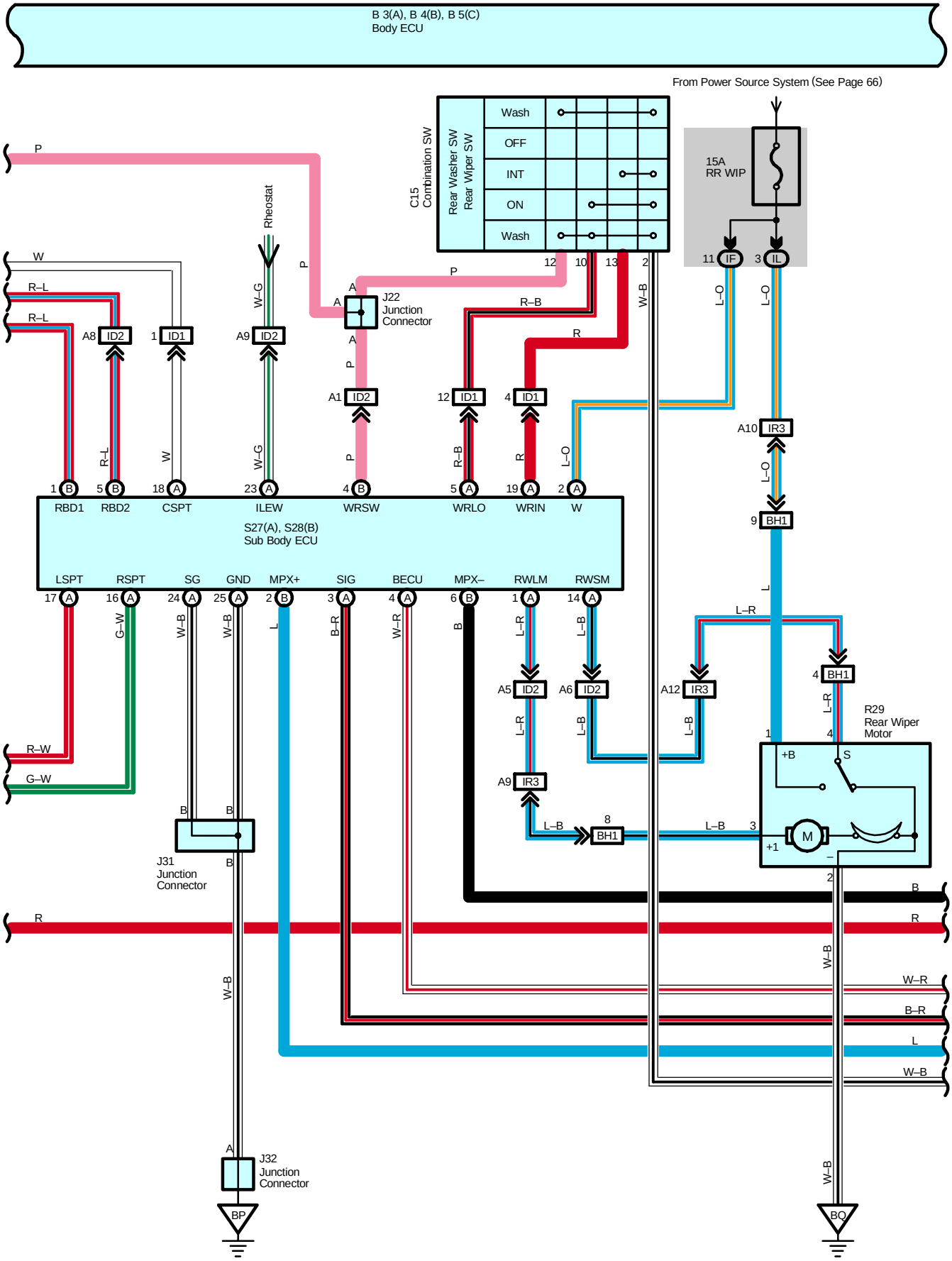
B 3(A), B 4(B), B 5(C)
Body ECU
From Power Source System (See Page 66)
C15
Combination SW
Rear Washer SW
Rear Wiper SW
Wash
OFF
INT
ON
Wash
15A
RR WIP
Rheostat
J22
Junction
Connector
S27(A), S28(B)
Sub Body ECU
RBD1
RBD2
CSPT
ILEW
WRSW
WRLO
WRIN
W
LSPT
RSPT
SG
GND
MPX+
SIG
BECU
MPX–
RWLM
RWSM
R29
Rear Wiper
Motor
J31
Junction
Connector
J32
Junction
Connector
BP
BQ

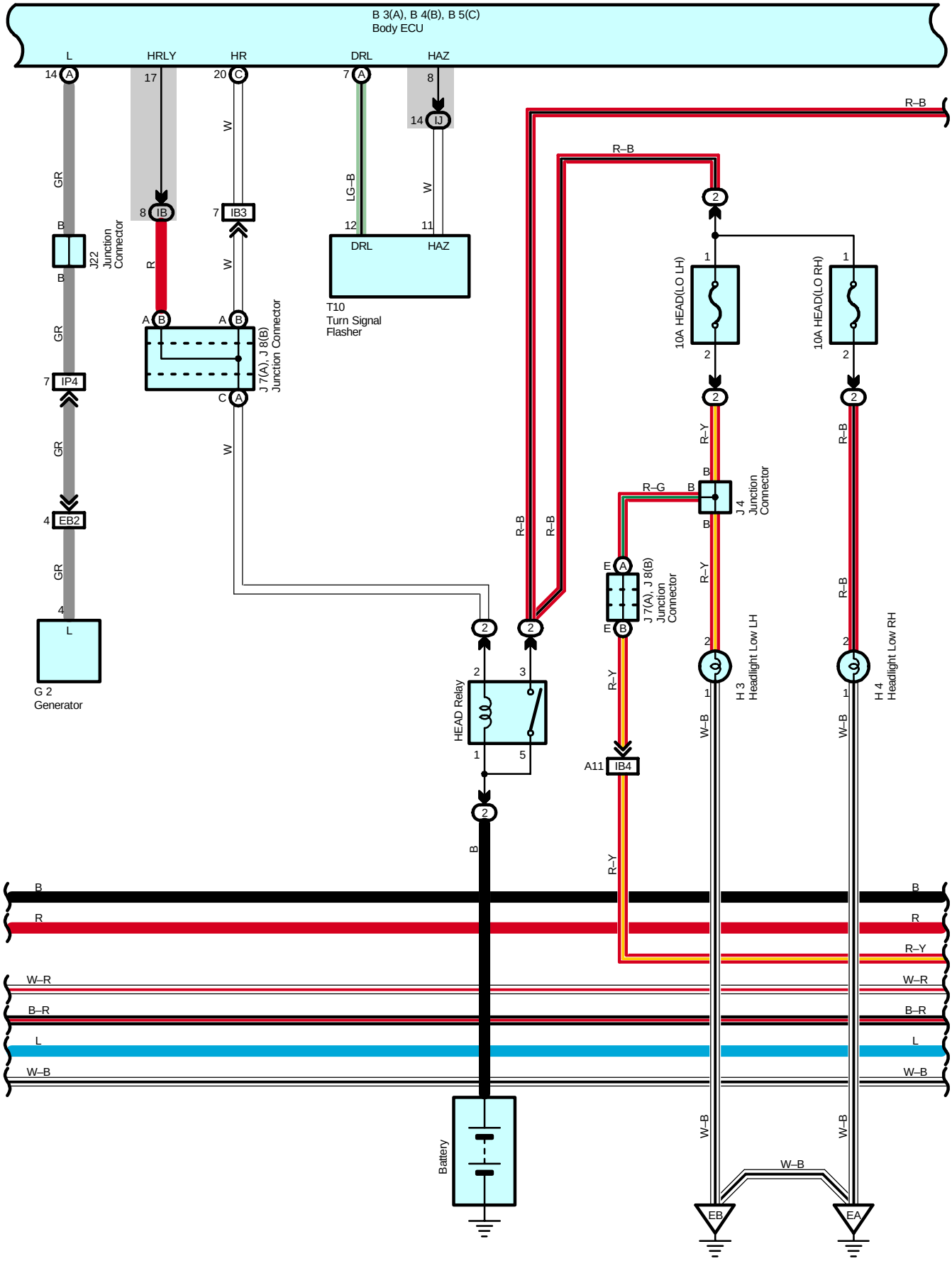
B 3(A), B 4(B), B 5(C)
Body ECU
L
HRLY
HR
DRL
HAZ
J22
Junction
Connector
IP4
EB2
G 2
Generator
IB
IB3
J 7(A), J 8(B)
Junction Connector
T10
Turn Signal
Flasher
10A HEAD(LO LH)
10A HEAD(LO RH)
J 4
Junction
Connector
J 7(A), J 8(B)
Junction
Connector
HEAD Relay
A11
IB4
H 3
Headlight Low LH
H 4
Headlight Low RH
Battery
EB
EA

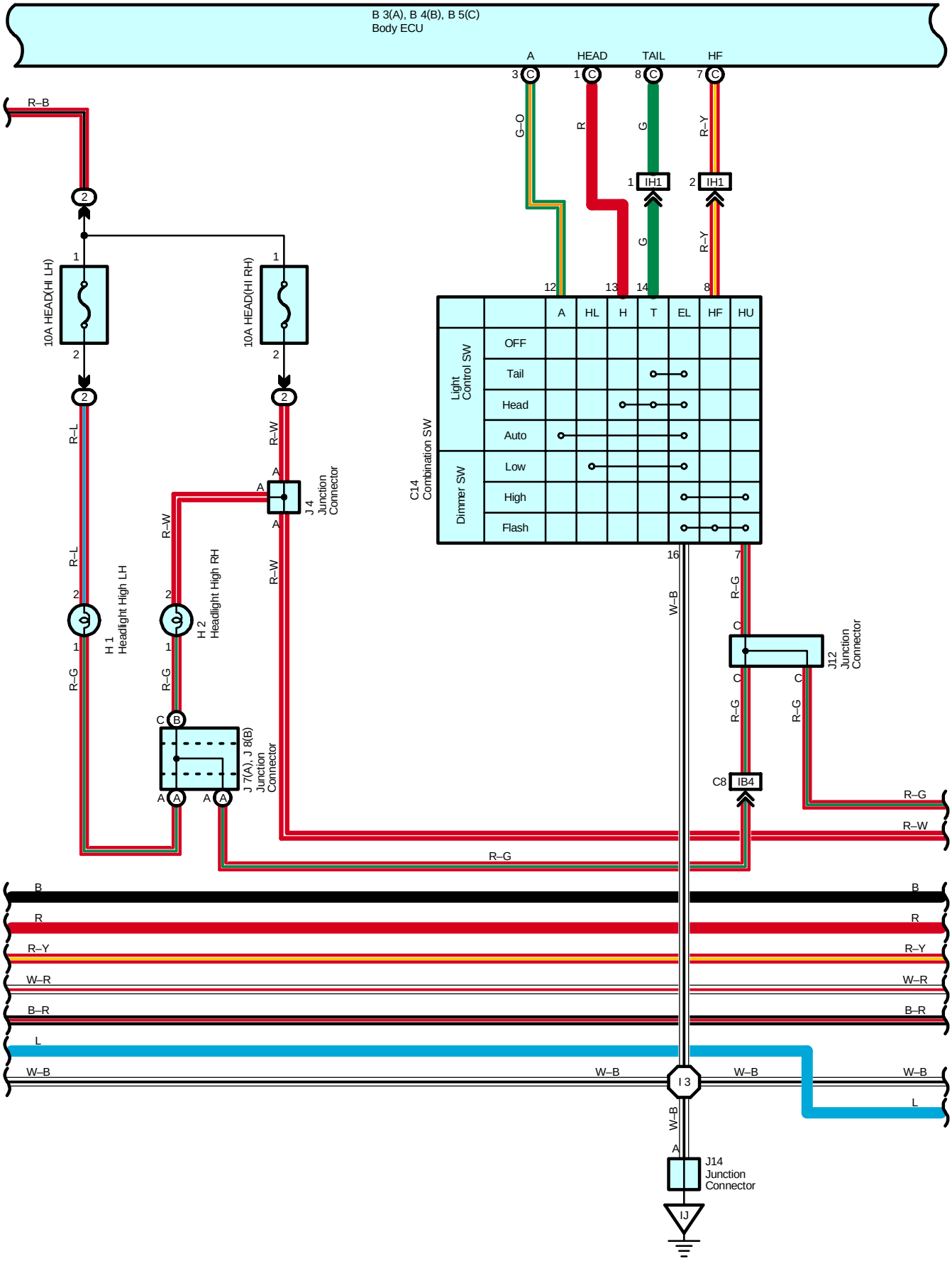
B 3(A), B 4(B), B 5(C)
Body ECU
A
HEAD
TAIL
HF
G–O
R
G
R–Y
IH1
10A HEAD(HI LH)
10A HEAD(HI RH)
R–B
R–L
R–W
R–G
W–B
C14
Combination SW
Light Control SW
Dimmer SW
OFF
Tail
Head
Auto
Low
High
Flash
HL
H
T
EL
HU
J 4
Junction Connector
H 1
Headlight High LH
H 2
Headlight High RH
J 7(A), J 8(B)
Junction Connector
J12
Junction Connector
C8
IB4
B
R
R–Y
W–R
B–R
L
I 3
J14
Junction Connector
IJ

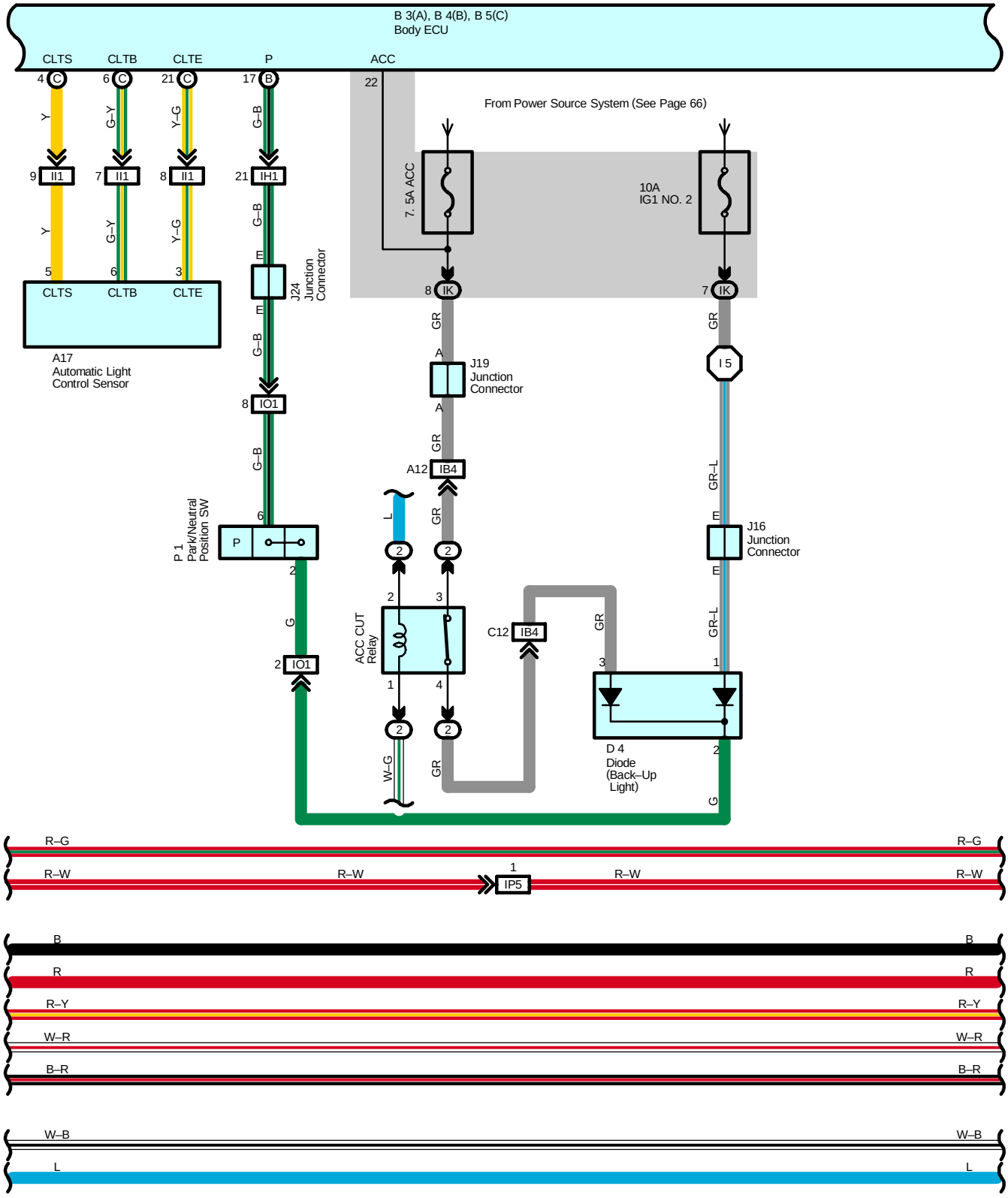
B 3(A), B 4(B), B 5(C)
Body ECU
CLTS
CLTB
CLTE
P
ACC
From Power Source System (See Page 66)
7. 5A ACC
10A
IG1 NO. 2
A17
Automatic Light
Control Sensor
J24
Junction
Connector
J19
Junction
Connector
J16
Junction
Connector
P 1
Park/Neutral
Position SW
ACC CUT
Relay
D 4
Diode
(Back–Up
Light)
R–G
R–W
IP5
B
R
R–Y
W–R
B–R
W–B
L

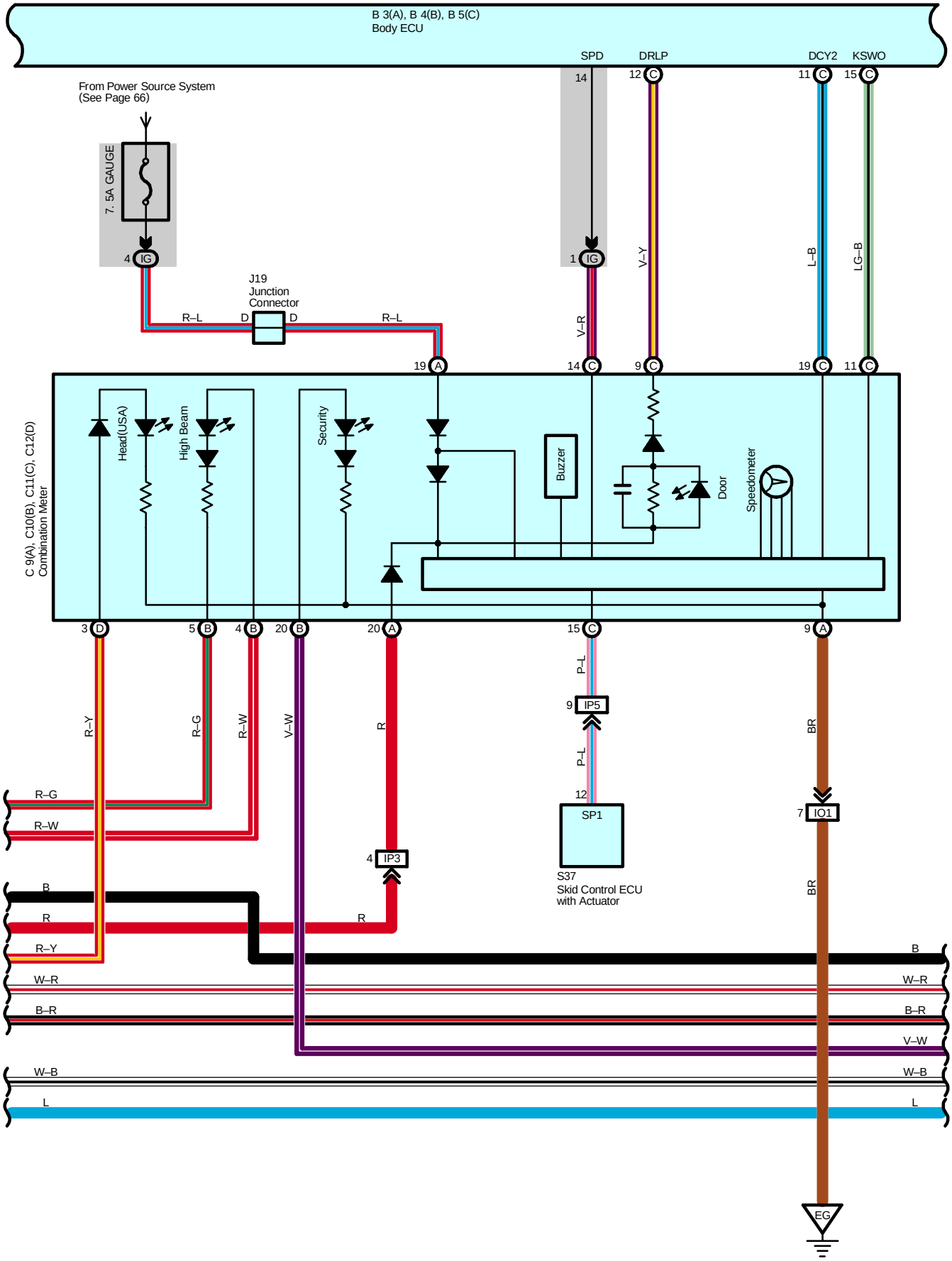
B 3(A), B 4(B), B 5(C)
Body ECU
SPD
DRLP
DCY2
KSWO
From Power Source System
(See Page 66)
7. 5A GAUGE
J19
Junction
Connector
R–L
V–R
V–Y
L–B
LG–B
C 9(A), C10(B), C11(C), C12(D)
Combination Meter
Head(USA)
High Beam
Security
Buzzer
Door
Speedometer
R–Y
R–G
R–W
V–W
R
P–L
BR
IP5
IP3
IO1
SP1
S37
Skid Control ECU
with Actuator
B
W–R
B–R
W–B
L
EG

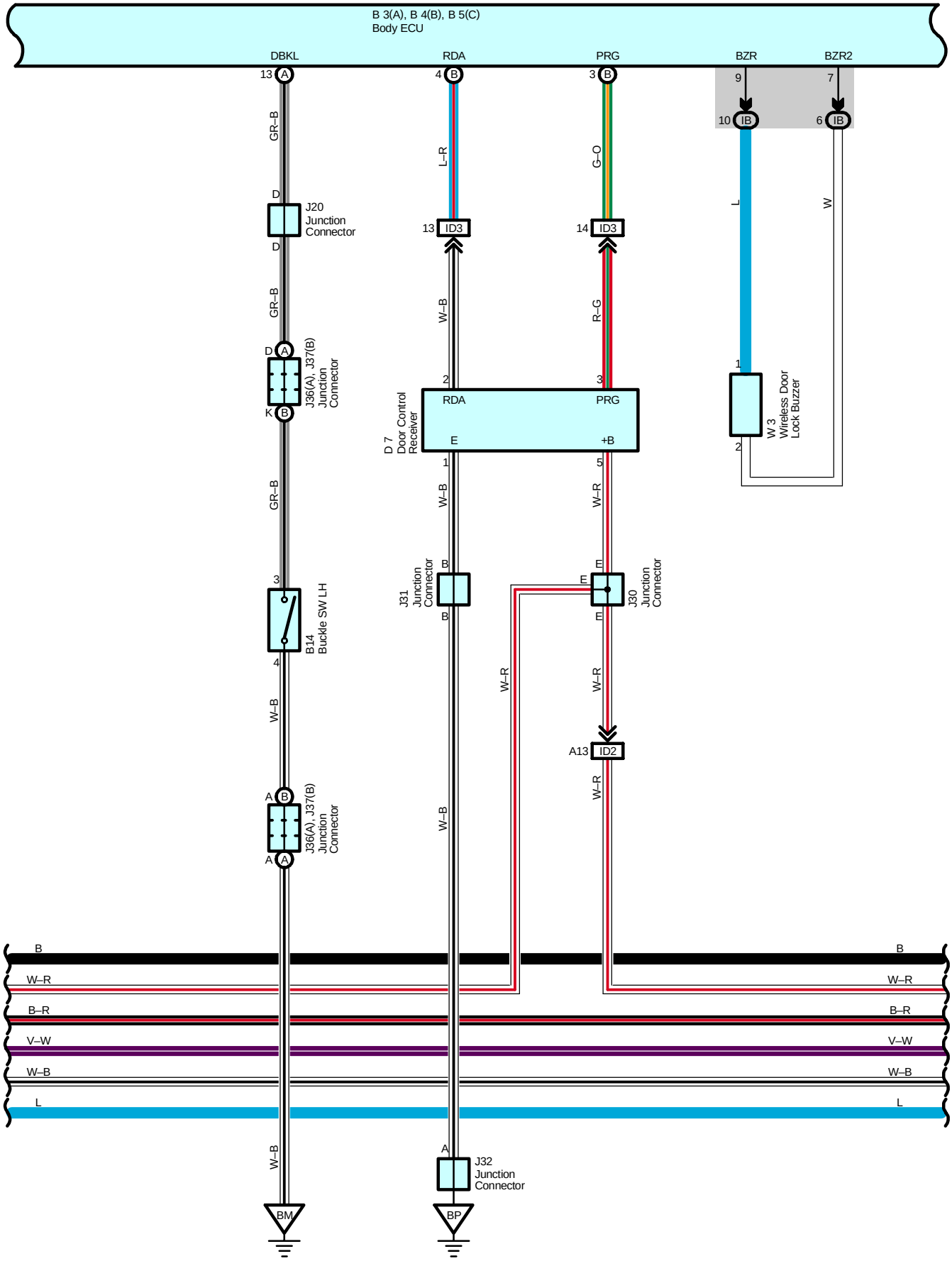
B 3(A), B 4(B), B 5(C)
Body ECU
DBKL
RDA
PRG
BZR
BZR2
13 A
4 B
3 B
9
7
10 IB
6 IB
GR–B
L–R
G–O
L
W
D
J20
Junction
Connector
D
13 ID3
14 ID3
GR–B
W–B
R–G
D A
J36(A), J37(B)
Junction
Connector
K B
2
3
RDA
PRG
D 7
Door Control
Receiver
E
+B
1
5
W 3
Wireless Door
Lock Buzzer
2
GR–B
W–B
W–R
3
B14
Buckle SW LH
4
J31
Junction
Connector
B
B
E
E
J30
Junction
Connector
E
W–R
W–R
W–B
A13 ID2
W–R
A B
J36(A), J37(B)
Junction
Connector
A A
W–B
B
W–R
B–R
V–W
W–B
L
B
W–R
B–R
V–W
W–B
L
W–B
A
J32
Junction
Connector
BM
BP

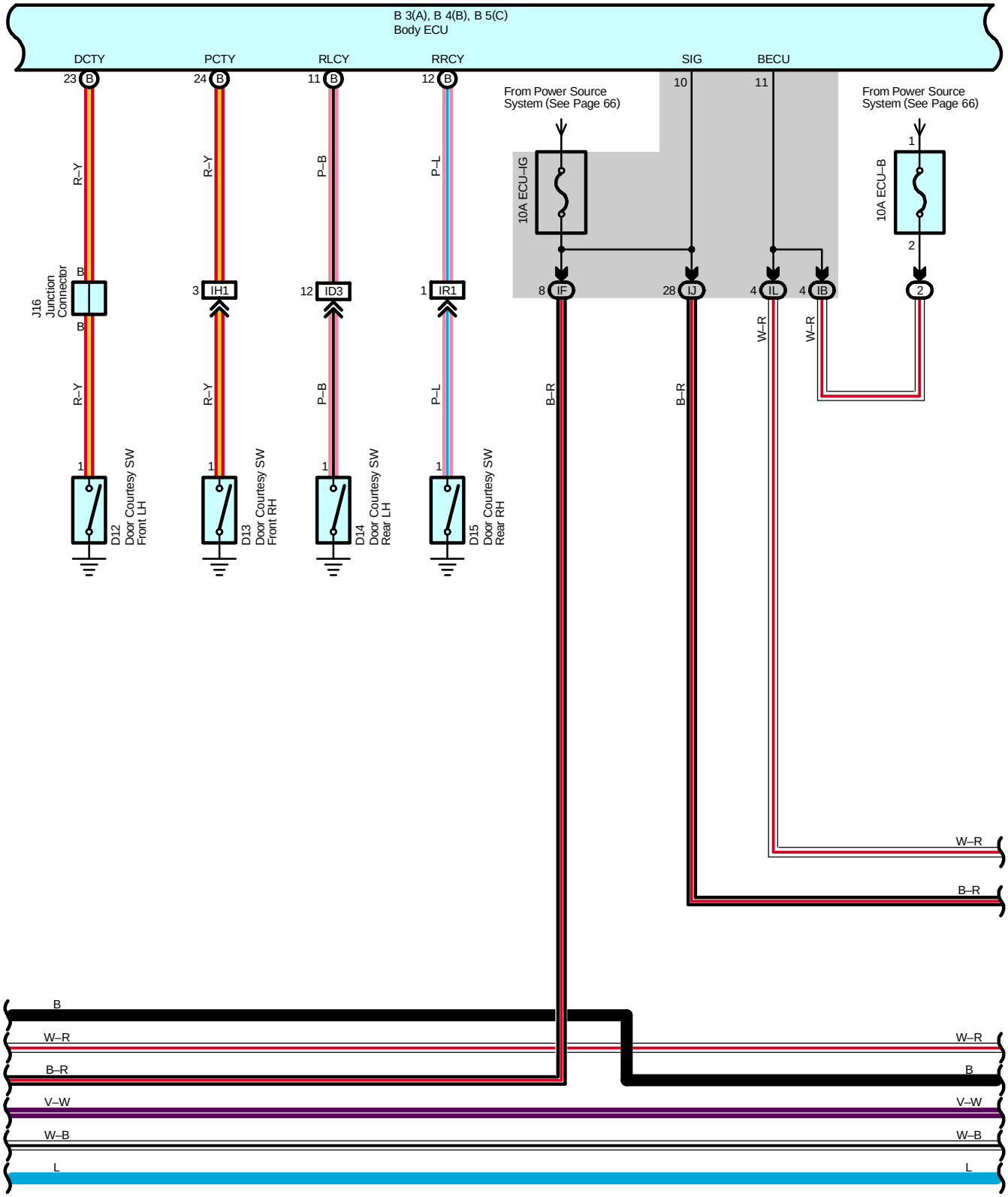
B 3(A), B 4(B), B 5(C)
Body ECU
DCTY
PCTY
RLCY
RRCY
SIG
BECU
23 B
24 B
11 B
12 B
10
11
From Power Source System (See Page 66)
From Power Source System (See Page 66)
10A ECU–IG
10A ECU–B
1
2
R–Y
R–Y
P–B
P–L
B
B
J16 Junction Connector
3 IH1
12 ID3
1 IR1
8 IF
28 IJ
4 IL
4 IB
2
W–R
W–R
B–R
B–R
R–Y
R–Y
P–B
P–L
1
1
1
1
D12 Door Courtesy SW Front LH
D13 Door Courtesy SW Front RH
D14 Door Courtesy SW Rear LH
D15 Door Courtesy SW Rear RH
W–R
B–R
B
W–R
B–R
W–R
B
V–W
V–W
W–B
W–B
L
L

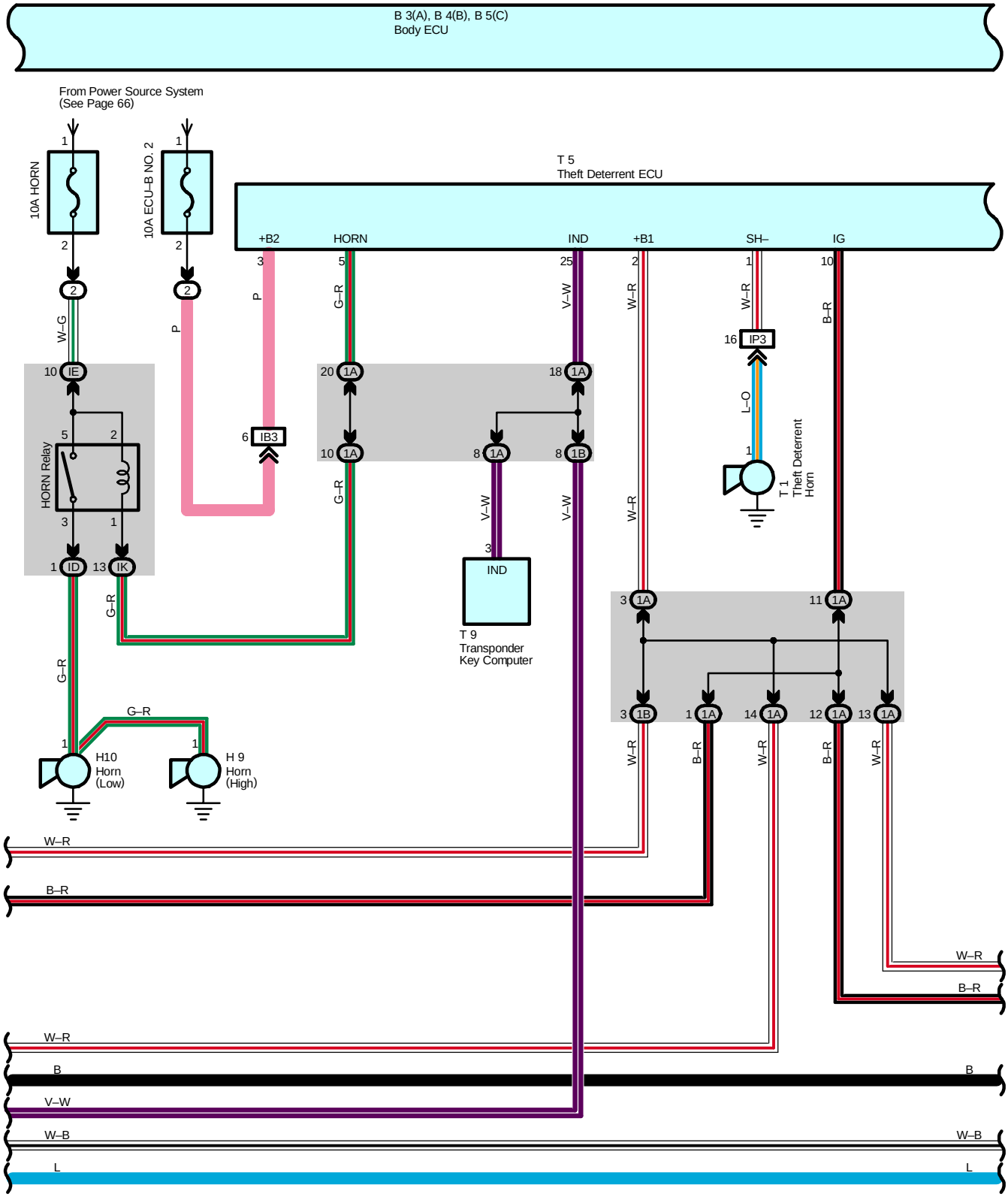
B 3(A), B 4(B), B 5(C)
Body ECU
From Power Source System
(See Page 66)
10A HORN
10A ECU–B NO. 2
T 5
Theft Deterrent ECU
+B2
HORN
IND
+B1
SH–
IG
HORN Relay
IB3
IP3
T 1
Theft Deterrent
Horn
T 9
Transponder
Key Computer
H10
Horn
(Low)
H 9
Horn
(High)
W–G
P
G–R
V–W
W–R
B–R
L–O
W–B
B
L

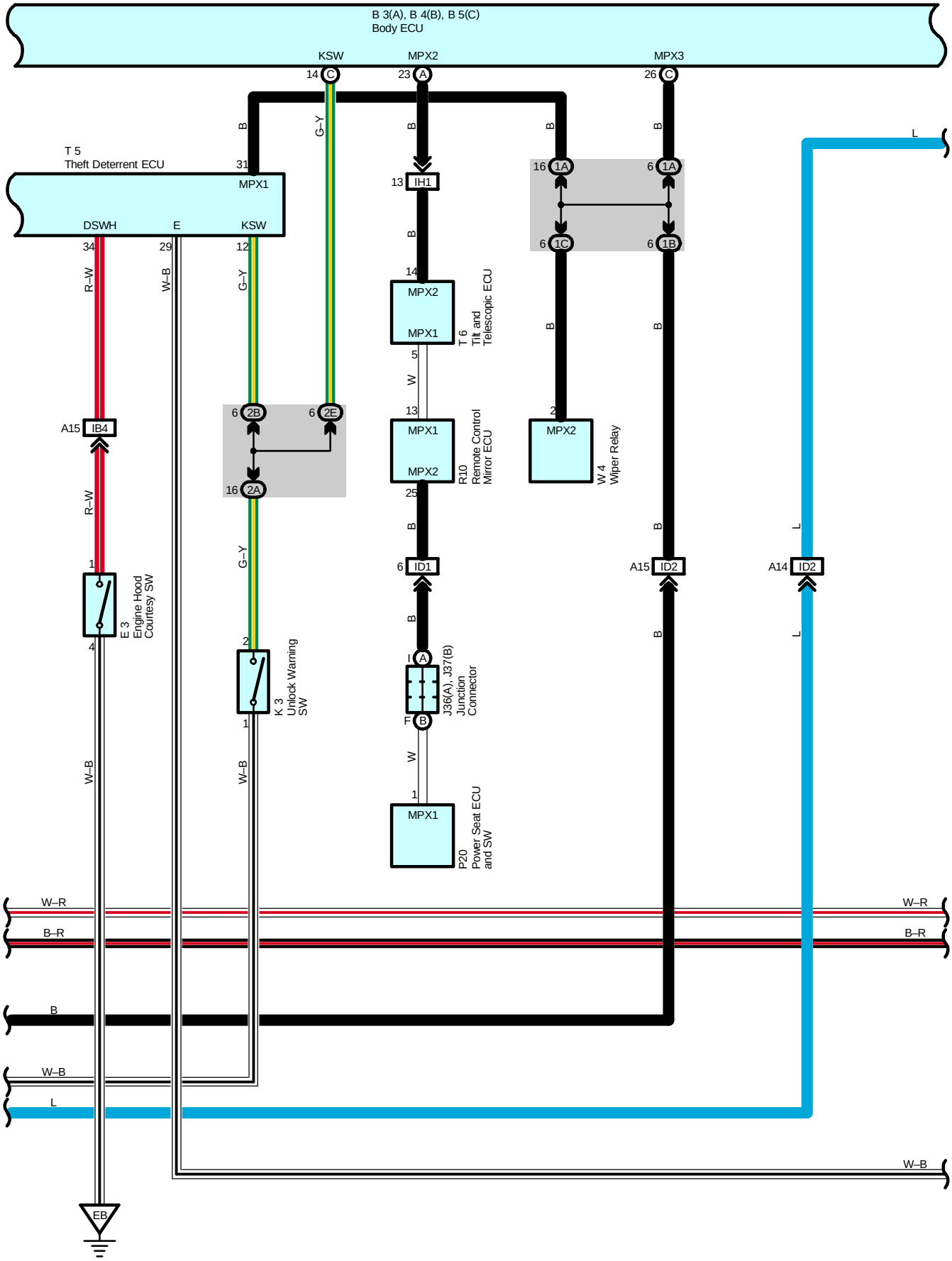
B 3(A), B 4(B), B 5(C)
Body ECU
KSW
MPX2
MPX3
14 C
23 A
26 C
T 5
Theft Deterrent ECU
31
MPX1
DSWH
E
KSW
34
29
12
R–W
W–B
G–Y
B
L
13 IH1
16 1A
6 1A
6 1C
6 1B
14
MPX2
MPX1
T 6
Tilt and
Telescopic ECU
5
W
13
MPX1
MPX2
R10
Remote Control
Mirror ECU
25
6 ID1
A15 ID2
A14 ID2
A15 IB4
6 2B
6 2E
16 2A
1
E 3
Engine Hood
Courtesy SW
4
2
K 3
Unlock Warning
SW
1
I A
F B
J36(A), J37(B)
Junction
Connector
1
MPX1
P20
Power Seat ECU
and SW
2
MPX2
W 4
Wiper Relay
W–R
B–R
B
W–B
L
W–B
EB

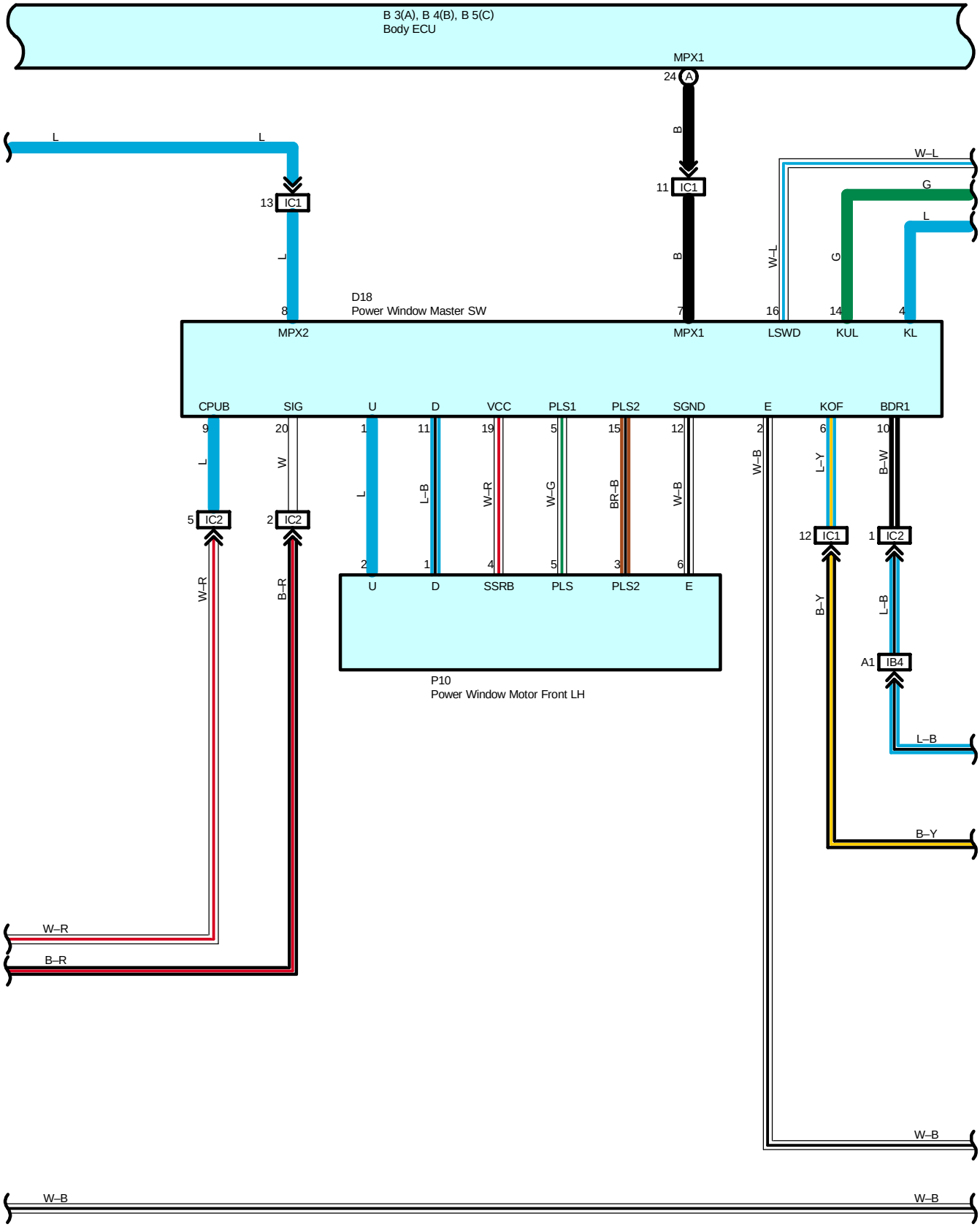
B 3(A), B 4(B), B 5(C)
Body ECU
MPX1
24 A
B
11 IC1
B
L
L
13 IC1
L
8
MPX2
D18
Power Window Master SW
7
MPX1
W–L
G
L
W–L
G
16
LSWD
14
KUL
4
KL
CPUB
SIG
U
D
VCC
PLS1
PLS2
SGND
E
KOF
BDR1
9
20
1
11
19
5
15
12
2
6
10
L
W
L
L–B
W–R
W–G
BR–B
W–B
W–B
L–Y
B–W
5 IC2
2 IC2
12 IC1
1 IC2
2
1
4
5
3
6
U
D
SSRB
PLS
PLS2
E
B–Y
L–B
A1 IB4
P10
Power Window Motor Front LH
L–B
B–Y
W–R
B–R
W–R
B–R
W–B
W–B
W–B

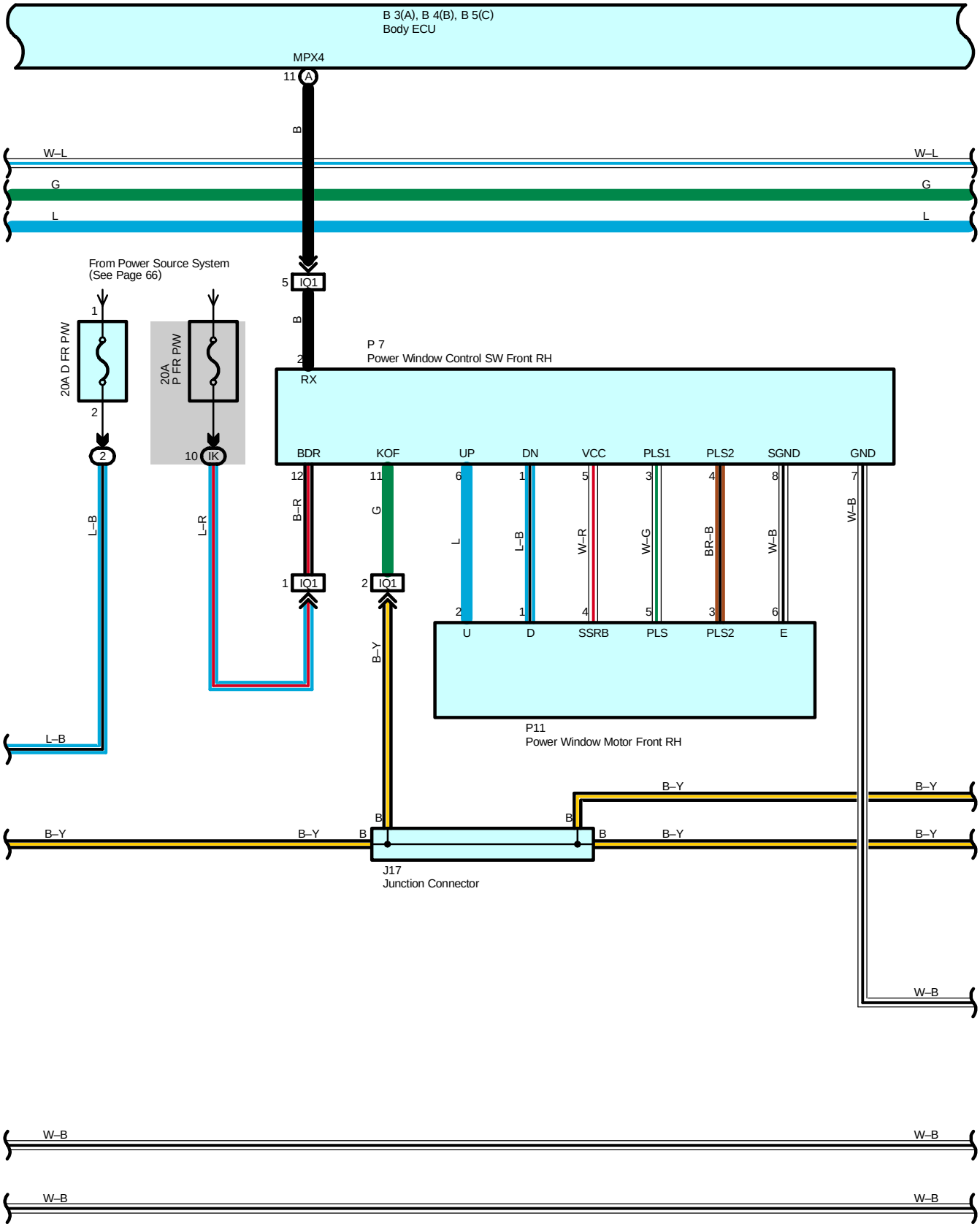
B 3(A), B 4(B), B 5(C)
Body ECU
MPX4
11 A
B
W–L
W–L
G
G
L
L
From Power Source System
(See Page 66)
5 IQ1
B
2
RX
P 7
Power Window Control SW Front RH
1
20A D FR P/W
2
20A
P FR P/W
2
10 IK
BDR
KOF
UP
DN
VCC
PLS1
PLS2
SGND
GND
12
11
6
1
5
3
4
8
7
B–R
G
L
L–B
W–R
W–G
BR–B
W–B
W–B
L–B
L–R
1 IQ1
2 IQ1
2
1
4
5
3
6
U
D
SSRB
PLS
PLS2
E
B–Y
P11
Power Window Motor Front RH
L–B
B–Y
B–Y
B
B
B–Y
B–Y
B
B
B–Y
B–Y
J17
Junction Connector
W–B
W–B
W–B
W–B
W–B

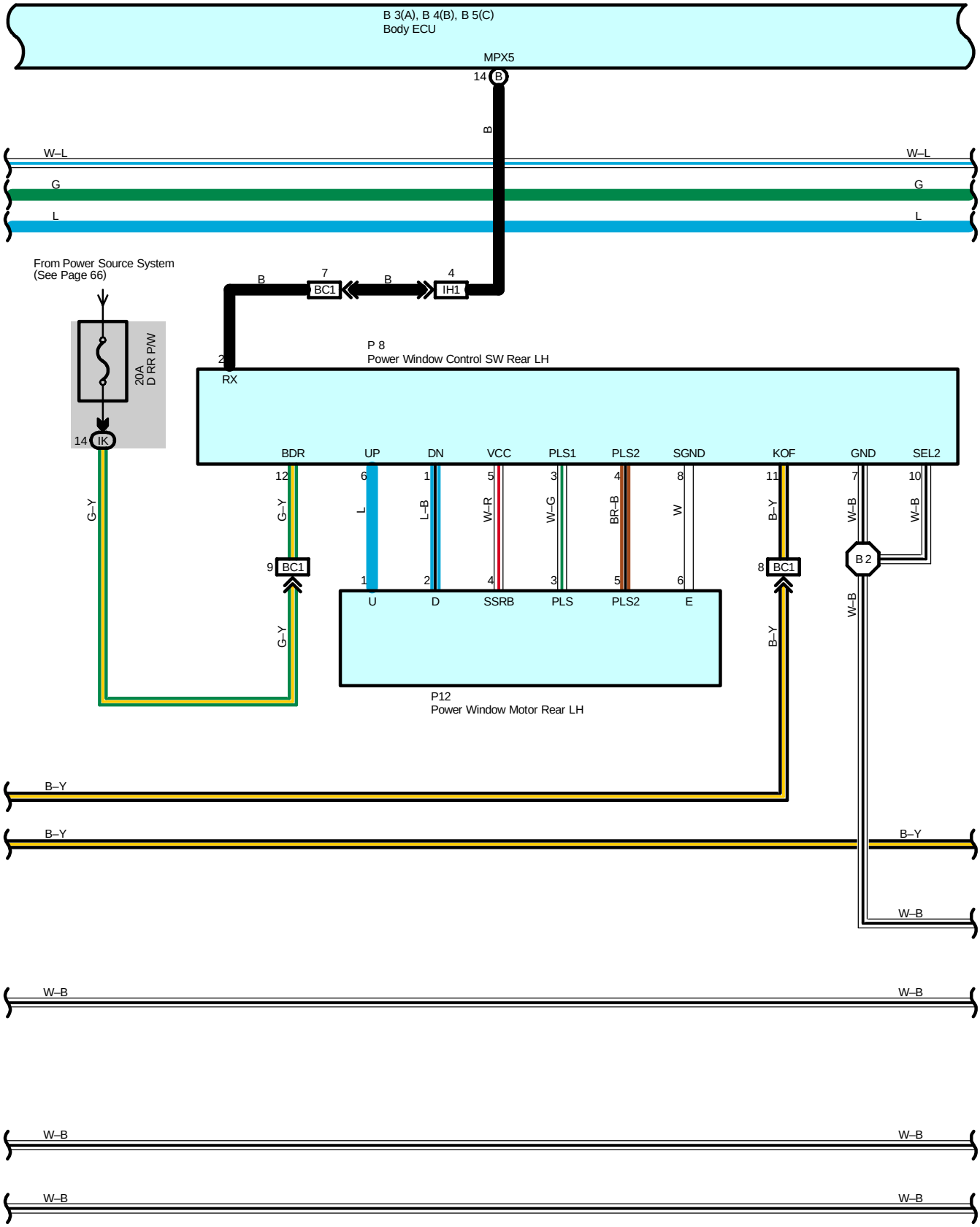
B 3(A), B 4(B), B 5(C)
Body ECU
MPX5
14 B
B
W–L
W–L
G
G
L
L
From Power Source System
(See Page 66)
B
7
BC1
B
4
IH1
20A
D RR P/W
2
RX
P 8
Power Window Control SW Rear LH
14 IK
BDR
UP
DN
VCC
PLS1
PLS2
SGND
KOF
GND
SEL2
12
6
1
5
3
4
8
11
7
10
G–Y
G–Y
L
L–B
W–R
W–G
BR–B
W
B–Y
W–B
W–B
9 BC1
1
2
4
3
5
6
8 BC1
B 2
U
D
SSRB
PLS
PLS2
E
G–Y
B–Y
W–B
P12
Power Window Motor Rear LH
B–Y
B–Y
B–Y
W–B
W–B
W–B
W–B
W–B
W–B

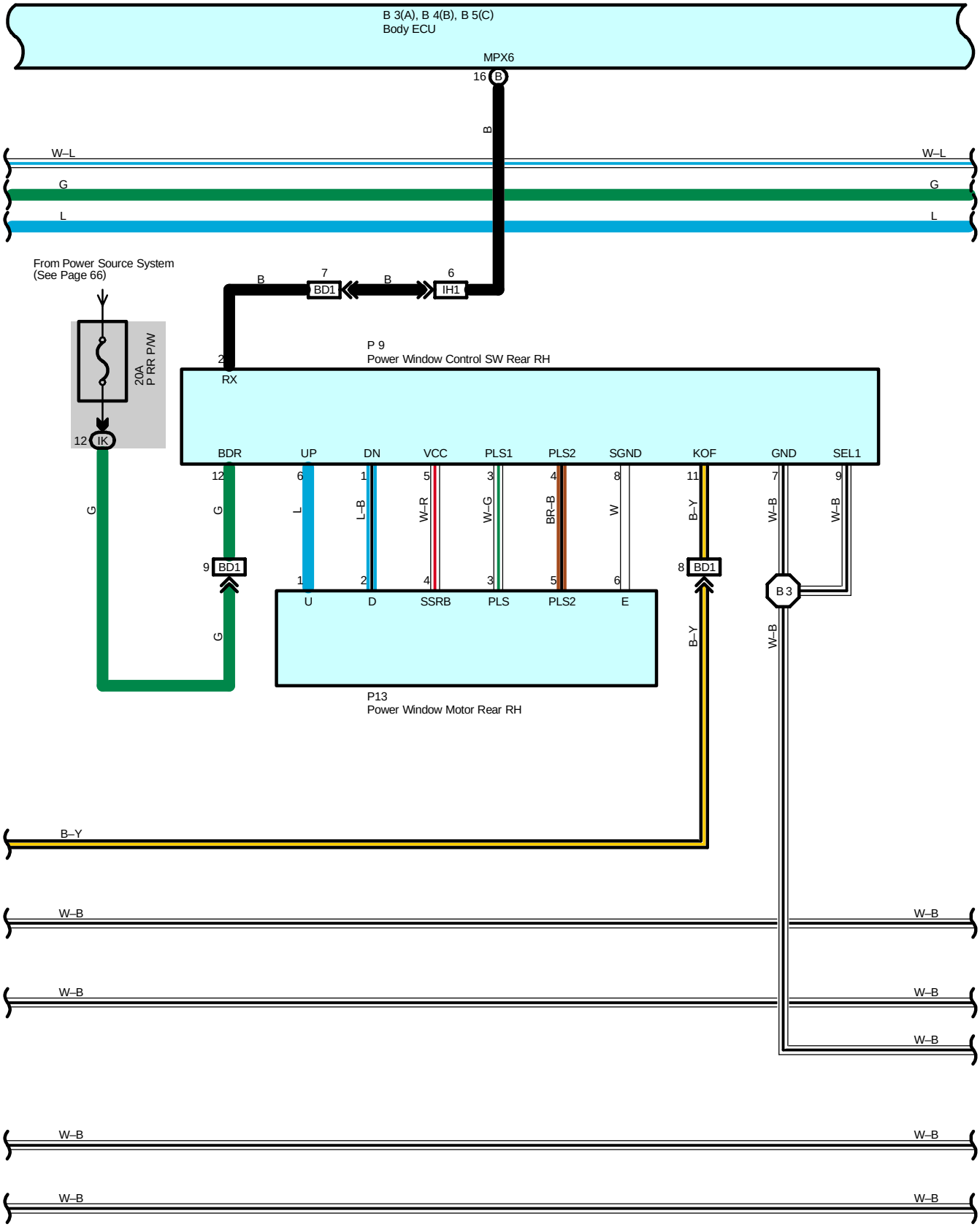
B 3(A), B 4(B), B 5(C)
Body ECU
MPX6
16 B
B
W–L
W–L
G
G
L
L
From Power Source System
(See Page 66)
B
7
BD1
B
6
IH1
20A
P RR P/W
2
RX
P 9
Power Window Control SW Rear RH
12 IK
BDR
UP
DN
VCC
PLS1
PLS2
SGND
KOF
GND
SEL1
12
6
1
5
3
4
8
11
7
9
G
G
L
L–B
W–R
W–G
BR–B
W
B–Y
W–B
W–B
9 BD1
1
2
4
3
5
6
8 BD1
B 3
U
D
SSRB
PLS
PLS2
E
G
B–Y
W–B
P13
Power Window Motor Rear RH
B–Y
W–B
W–B
W–B
W–B
W–B
W–B
W–B
W–B
W–B

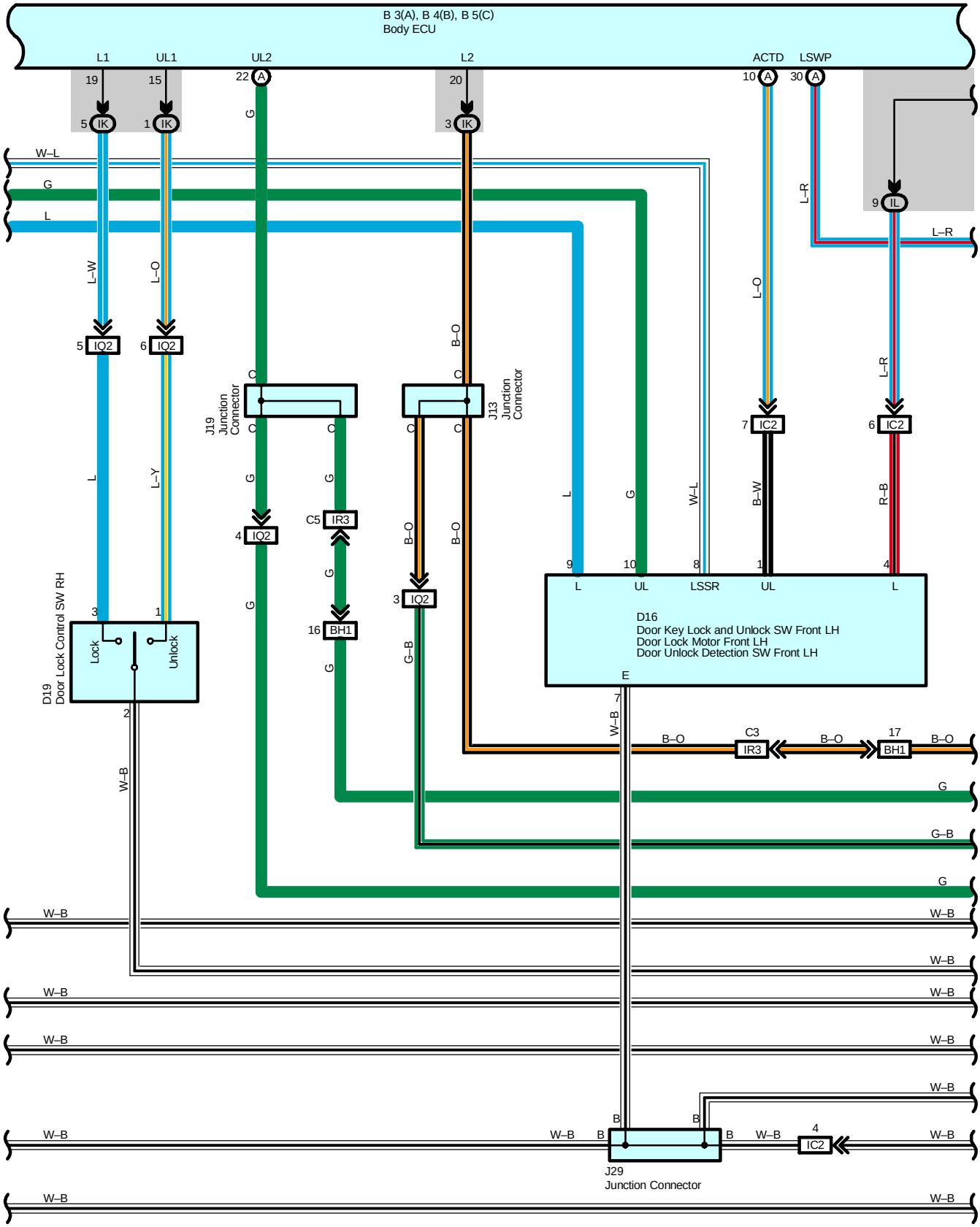
B 3(A), B 4(B), B 5(C)
Body ECU
L1
UL1
UL2
L2
ACTD
LSWP
J19
Junction
Connector
J13
Junction
Connector
D19
Door Lock Control SW RH
Lock
Unlock
D16
Door Key Lock and Unlock SW Front LH
Door Lock Motor Front LH
Door Unlock Detection SW Front LH
J29
Junction Connector

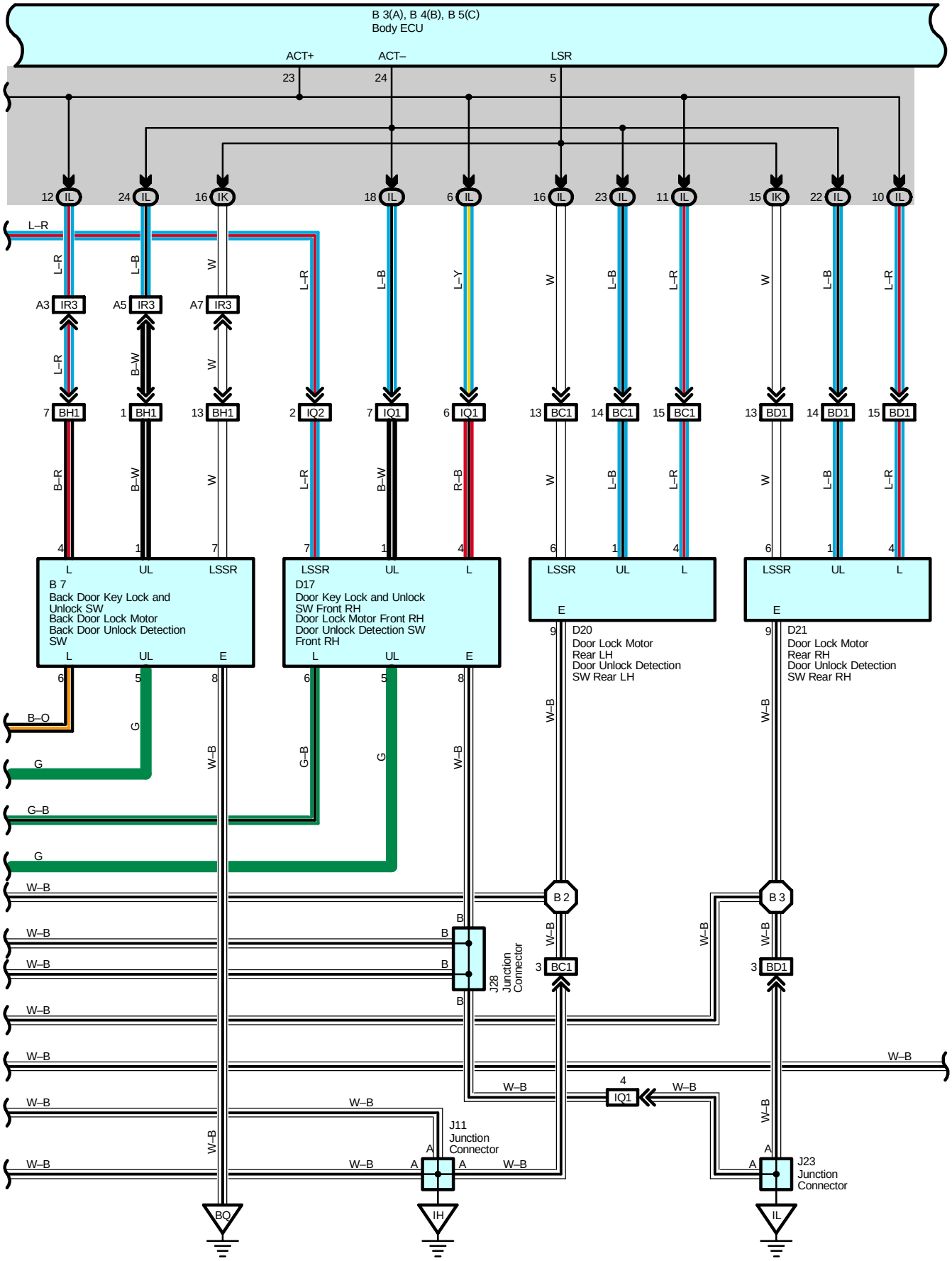
B 3(A), B 4(B), B 5(C)
Body ECU
ACT+
ACT–
LSR
B 7
Back Door Key Lock and Unlock SW
Back Door Lock Motor
Back Door Unlock Detection SW
D17
Door Key Lock and Unlock SW Front RH
Door Lock Motor Front RH
Door Unlock Detection SW Front RH
D20
Door Lock Motor Rear LH
Door Unlock Detection SW Rear LH
D21
Door Lock Motor Rear RH
Door Unlock Detection SW Rear RH
J28 Junction Connector
J11 Junction Connector
J23 Junction Connector

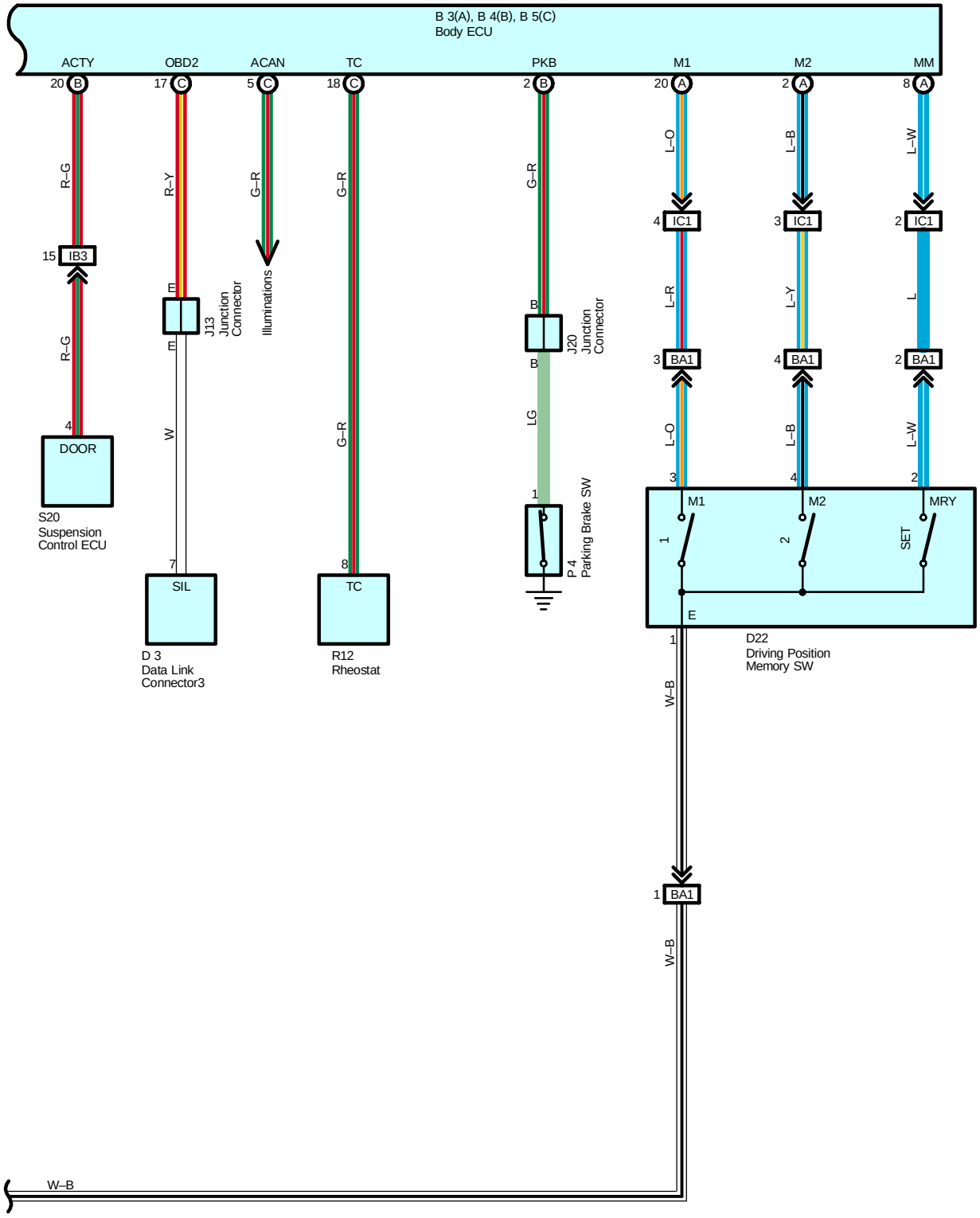
B 3(A), B 4(B), B 5(C)
Body ECU
ACTY
OBD2
ACAN
TC
PKB
M1
M2
MM
20 B
17 C
5 C
18 C
2 B
20 A
2 A
8 A
R–G
R–Y
G–R
G–R
G–R
L–O
L–B
L–W
4 IC1
3 IC1
2 IC1
15 IB3
E
J13
Junction
Connector
Illuminations
B
J20
Junction
Connector
L–R
L–Y
L
3 BA1
4 BA1
2 BA1
R–G
E
B
LG
L–O
L–B
L–W
4
DOOR
W
G–R
1
3
4
2
S20
Suspension
Control ECU
7
SIL
8
TC
P 4
Parking Brake SW
M1
M2
MRY
1
2
SET
E
D 3
Data Link
Connector3
R12
Rheostat
D22
Driving Position
Memory SW
1
W–B
1 BA1
W–B
W–B

System Outline

Multiplex communication system is controlled by body ECU, theft deterrent ECU, wiper relay, sub body ECU, tilt and telescopic ECU, remote control mirror ECU, power window master SW, power window control SW front RH, rear LH, RH, power seat ECU and SW, etc.
For example, when door is opened, signal from door courtesy SW is transmitted to body ECU and turns on indoor lamp.
See new car features or repair manual for detail.

Service Hints

Body ECU

22–Ground : Approx. 12 volts with the ignition SW at ACC or ON position
11, 12–Ground : Always approx. 12 volts
10–Ground : Approx. 12 volts with the ignition SW at ON position
4, 16–Ground : Always continuity

T5 Theft Deterrent ECU

2, 3–Ground : Always approx. 12 volts
10–Ground : Approx. 12 volts with the ignition SW at ON position
29–Ground : Always continuity

S27 (A) Sub Body ECU

(A) 24, (A) 25–Ground : Always continuity
(A) 4–Ground : Always approx. 12 volts
(A) 3–Ground : Approx. 12 volts with the ignition SW at ON position

○ : **Parts Location**

Code		See Page	Code		See Page	Code		See Page
A17		38	H2		36	M13		44
B3	A	38	H3		36	P1		37
B4	B	38	H4		36	P4		40
B5	C	38	H9		36	P7		44
B6		42	H10		36	P8		44
B7		42	I17		39	P9		44
B14		46	I20		43	P10		44
C9	A	38	I21		43	P11		44
C10	B	38	I22		43	P12		44
C11	C	38	I23		43	P13		44
C12	D	38	I24		43	P20		46
C14		38	J4		37	R10		41
C15		38	J7	A	40	R12		41
D3		39	J8	B	40	R25		44
D4		39	J11		40	R29		44
D7		42	J12		40	S13		41
D8		42	J13		40	S14		41
D9		42	J14		40	S20		41
D10		42	J16		40	S25		45
D11		42	J17		40	S26		45
D12		42	J18		40	S27	A	45
D13		42	J19		40	S28	B	45
D14		42	J20		40	S37		37
D15		42	J22		40	T1		37
D16		42	J23		40	T5		41
D17		42	J24		40	T6		41
D18		42	J28		43	T9		41
D19		42	J29		43	T10		41
D20		42	J30		43	T18		41
D21		42	J31		43	V4		45
D22		42	J32		43	V5		45
D23		39	J36	A	46	W2		37
E3		36	J37	B	46	W3		37
G2		36	K3		40	W4		41
H1		36	M12		44			

▭ : **Relay Blocks**

Code	See Page	Relay Blocks (Relay Block Location)
2	22	Engine Room R/B (Engine Compartment Left)

: **Junction Block and Wire Harness Connector**

Code	See Page	Junction Block and Wire Harness (Connector Location)
IA	26	Roof Wire and Driver Side J/B (Lower Finish Panel)
IB	26	Engine Room Main Wire and Driver Side J/B (Lower Finish Panel)
IC		
ID		
IE		
IF	26	Floor No.2 Wire and Driver Side J/B (Lower Finish Panel)
IG	27	Instrument Panel Wire and Driver Side J/B (Lower Finish Panel)
IH		
IJ		
IK		
IL		
1A	30	Instrument Panel Wire and J/B No.1 (Instrument Panel Reinforcement Left)
1B		
1C		
1D		
1E		
2A	32	Instrument Panel Wire and J/B No.2 (Instrument Panel Reinforcement Center)
2B		
2E		
3A	34	Instrument Panel Wire and J/B No.3 (Instrument Panel Reinforcement Right)
3B		
3C		
3D		
3E		

: **Connector Joining Wire Harness and Wire Harness**

Code	See Page	Joining Wire Harness and Wire Harness (Connector Location)
EB2	48	Engine No.2 Wire and Engine Room Main Wire (Near the Engine Room R/B)
IB3	50	Instrument Panel Wire and Engine Room Main Wire (Left Kick Panel)
IB4		
IC1	50	Front Door LH Wire and Instrument Panel Wire (Left Kick Panel)
IC2		
ID1	50	Instrument Panel Wire and Floor No.2 Wire (Left Kick Panel)
ID2		
ID3		
IF1	52	Roof Wire and Instrument Panel Wire (Upper the Driver Side J/B)
IH1	52	Instrument Panel Wire and Instrument Panel Wire (Near the J/B No.1)
II1	52	Instrument Panel No.3 Wire and Instrument Panel Wire (Near the Combination Meter)
IO1	54	Engine Wire and Instrument Panel Wire (Right Side of the Blower Unit)
IP3	54	Instrument Panel Wire and Engine Room Main Wire (Right Kick Panel)
IP4		
IP5		
IQ1	56	Front Door RH Wire and Instrument Panel Wire (Right Kick Panel)
IQ2		
IR1	56	Instrument Panel Wire and Floor Wire (Right Kick Panel)
IR2		
IR3		
BA1	58	Front Door LH Wire and Front Door LH Sub Wire (Inside of Front Door LH)
BB1	58	Front Door RH Wire and Front Door RH Sub Wire (Inside of Front Door RH)
BC1	58	Rear Door LH Wire and Instrument Panel Wire (Center Pillar LH)
BD1	58	Rear Door RH Wire and Instrument Panel Wire (Center Pillar RH)
BH1	60	Back Door No.1 Wire and Floor Wire (Right Quarter Panel Inner)

▽ : **Ground Points**

Code	See Page	Ground Points Location
EA	48	Front Right Fender
EB	48	Front Left Fender
EG	48	Rear Bank of Left Cylinder Head
IH	50	Left Kick Panel
IJ	50	Near the Right Side of Steering Column
IL	50	Right Kick Panel
BM	58	Under the Driver's Seat
BP	58	Left Quarter Panel Inner
BQ	58	Back Door Panel Center

○ : **Splice Points**

Code	See Page	Wire Harness with Splice Points	Code	See Page	Wire Harness with Splice Points
I2	52	Instrument Panel Wire	B1	60	Roof Wire
I3			B2	60	Rear Door LH Wire
I5			B3	60	Rear Door RH Wire

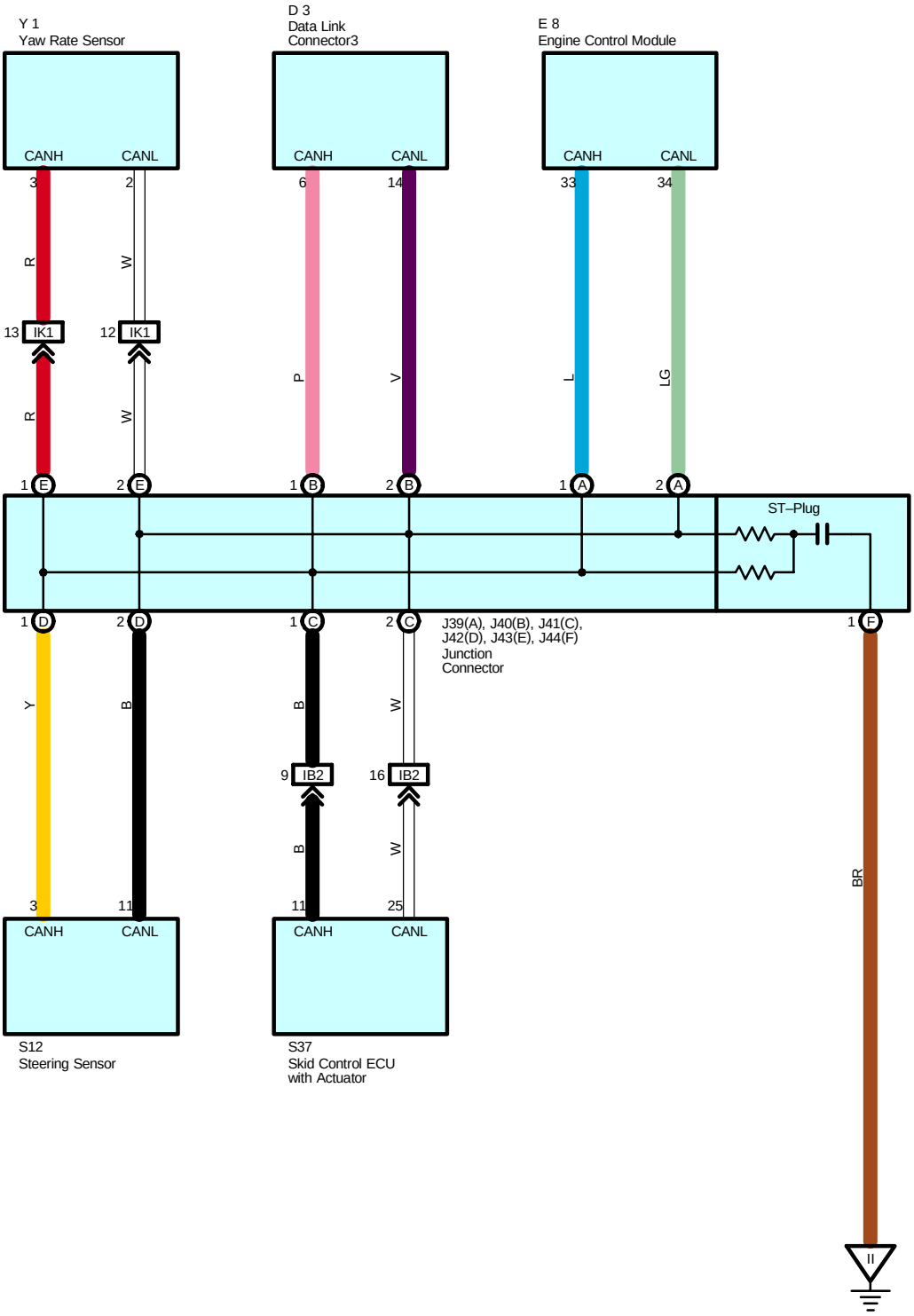
Y 1
Yaw Rate Sensor
CANH
CANL
D 3
Data Link
Connector3
CANH
CANL
E 8
Engine Control Module
CANH
CANL
3
2
6
14
33
34
R
W
P
V
L
LG
13
IK1
12
IK1
R
W
1
E
2
E
1
B
2
B
1
A
2
A
ST–Plug
1
D
2
D
1
C
2
C
1
F
J39(A), J40(B), J41(C),
J42(D), J43(E), J44(F)
Junction
Connector
Y
B
B
W
9
IB2
16
IB2
B
W
BR
3
11
11
25
CANH
CANL
CANH
CANL
S12
Steering Sensor
S37
Skid Control ECU
with Actuator

System Outline

Multiplex communication system (CAN) uses a serial communication protocol and communicates with a differential voltage. In this network system, TERMINALS CANH and CANL are used for communication between the ECUs and sensors, and excellent data communication speed and communication error detecting facility are provided. This system is working for the following systems:

* VSC

○ : Parts Location

Code		See Page	Code		See Page	Code	See Page
D3		39	J41	C	40	S12	41
E8		39	J42	D	40	S37	37
J39	A	40	J43	E	40	Y1	41
J40	B	40	J44	F	40		

▭ : Connector Joining Wire Harness and Wire Harness

Code	See Page	Joining Wire Harness and Wire Harness (Connector Location)
IB2	50	Instrument Panel Wire and Engine Room Main Wire (Left Kick Panel)
IK1	52	Console Box Wire and Instrument Panel Wire (Under the Instrument Panel Brace LH)

▽ : Ground Points

Code	See Page	Ground Points Location
II	50	Near the Left Side of Steering Column

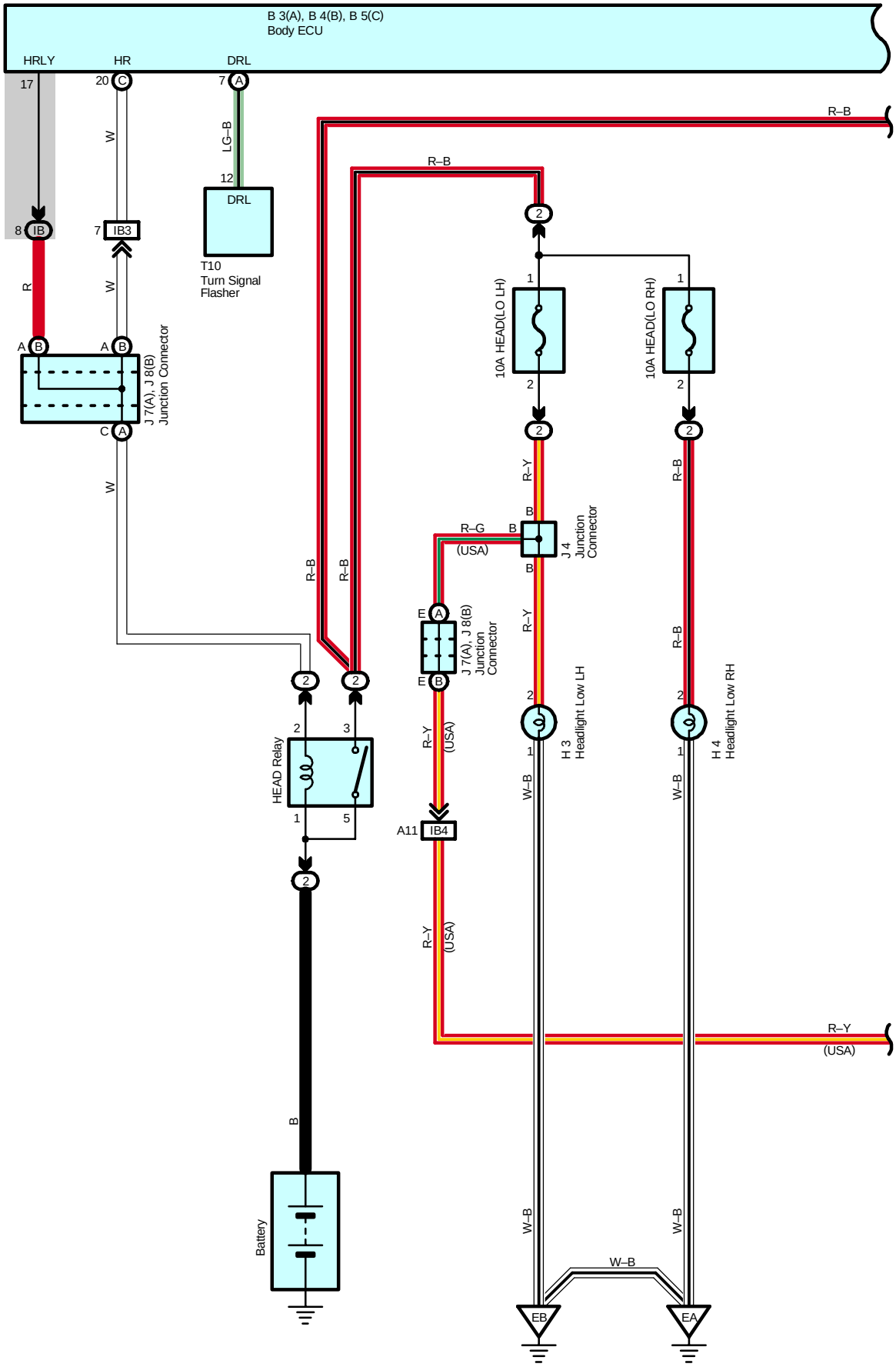
B 3(A), B 4(B), B 5(C)
Body ECU
HRLY
HR
DRL
17
20
7
W
LG–B
12
DRL
T10
Turn Signal
Flasher
8
IB
7
IB3
R
W
A
B
A
B
J 7(A), J 8(B)
Junction Connector
C
A
W
R–B
R–B
R–B
R–B
R–B
2
1
10A HEAD(LO LH)
10A HEAD(LO RH)
2
R–Y
R–B
B
R–G
(USA)
J 4
Junction
Connector
E
A
J 7(A), J 8(B)
Junction
Connector
E
B
R–Y
R–B
2
3
HEAD Relay
1
5
R–Y
(USA)
H 3
Headlight Low LH
H 4
Headlight Low RH
W–B
W–B
A11
IB4
R–Y
(USA)
R–Y
(USA)
B
Battery
W–B
W–B
W–B
EB
EA

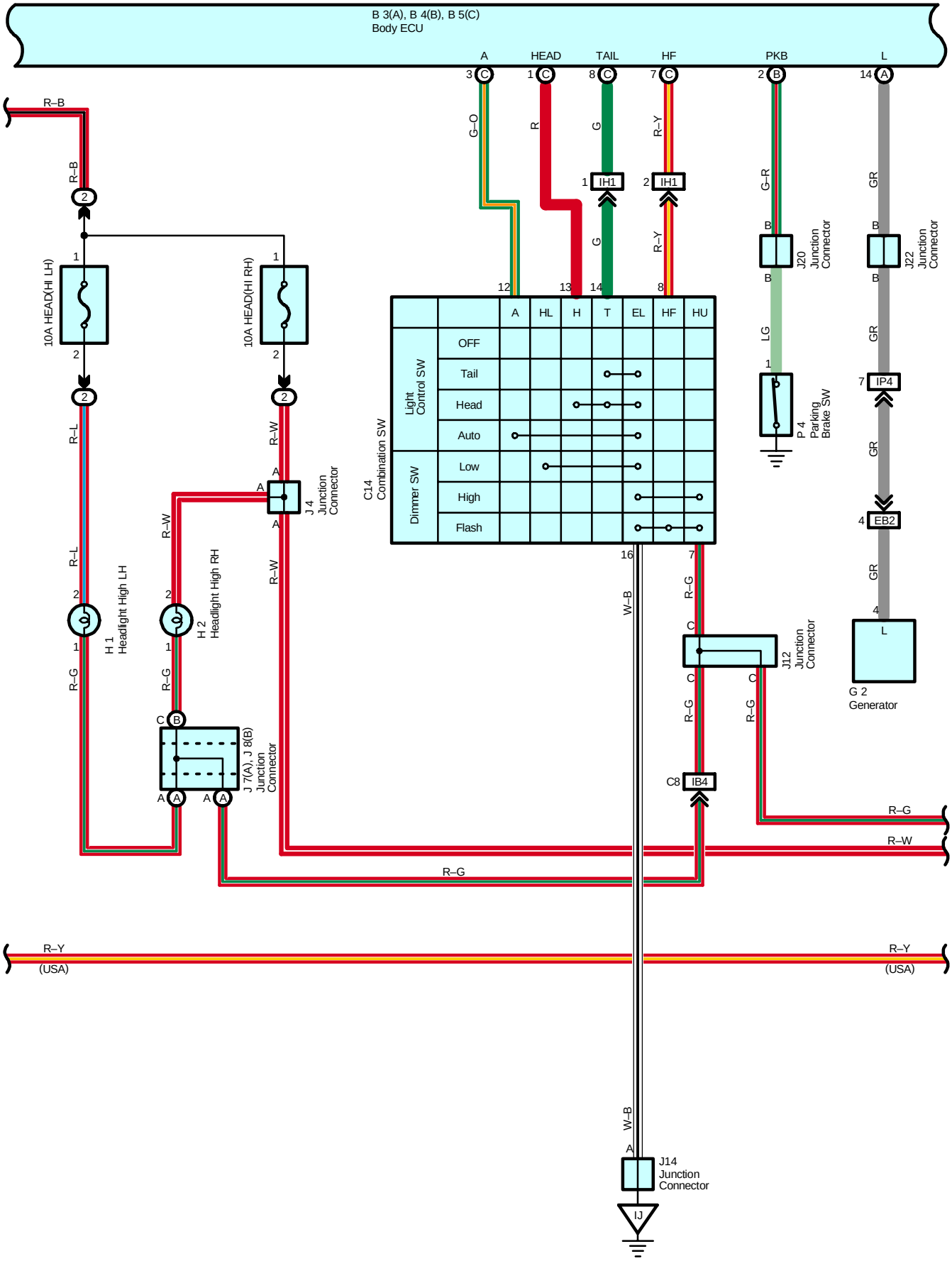
B 3(A), B 4(B), B 5(C)
Body ECU
A
HEAD
TAIL
HF
PKB
L
R–B
G–O
R
G
R–Y
G–R
GR
IH1
IH1
J20
Junction
Connector
J22
Junction
Connector
10A HEAD(HI LH)
10A HEAD(HI RH)
R–L
R–W
C14
Combination SW
Light
Control SW
Dimmer SW
OFF
Tail
Head
Auto
Low
High
Flash
A
HL
H
T
EL
HF
HU
LG
P 4
Parking
Brake SW
IP4
EB2
J 4
Junction
Connector
H 1
Headlight High LH
H 2
Headlight High RH
R–G
J 7(A), J 8(B)
Junction
Connector
W–B
J12
Junction
Connector
G 2
Generator
IB4
(USA)
J14
Junction
Connector
IJ

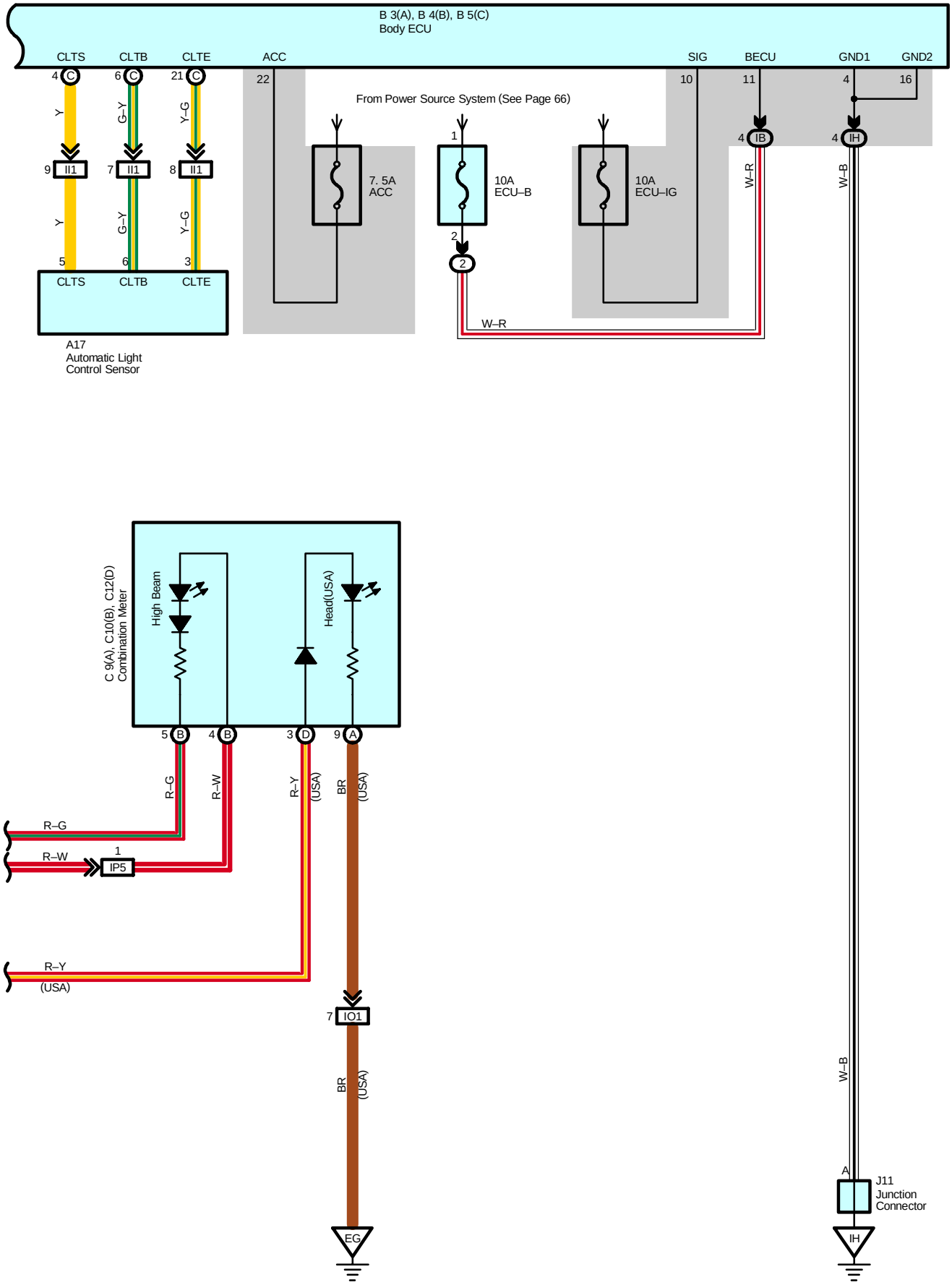
B 3(A), B 4(B), B 5(C)
Body ECU
CLTS
CLTB
CLTE
ACC
SIG
BECU
GND1
GND2
From Power Source System (See Page 66)
7. 5A
ACC
10A
ECU–B
10A
ECU–IG
W–R
W–B
A17
Automatic Light
Control Sensor
C 9(A), C10(B), C12(D)
Combination Meter
High Beam
Head(USA)
R–G
R–W
R–Y
(USA)
BR
IP5
IO1
EG
IH
J11
Junction
Connector

System Outline

∗ This system is designed to automatically activate the turn signal lights during the daytime to keep the car highly visible to other vehicles. This system is controlled by the body ECU.
This system makes use of the turn signal lights as daytime running lights.
For this reason, when the turn signal lights are operated, the daytime running lights function is interrupted momentarily, which, however, will be brought back into operation as soon as the interposed operation is over.

∗ This system is enabled when the conditions given below are met.

A) Ignition switch ON condition

B) Turn signal light switch OFF condition

C) Hazard light switch OFF condition

D) Light control switch OFF condition

E) Parking brake switch OFF condition (Parking brake out of operating condition)**

**: This system does not become active when the parking brake switch is ON. However, once the OFF signal of the parking brake switch is input into the body ECU, this system will become active thereafter, regardless of whether the parking brake switch is ON or OFF.

Service Hints

Body ECU

4, 16–Ground : Always continuity
11–Ground : Always approx. 12 volts
10–Ground : Approx. 12 volts with the ignition SW at ON position
22–Ground : Approx. 12 volts with the ignition SW at ON or ACC position

: Parts Location

Code		See Page	Code		See Page	Code	See Page
A17		38	G2		36	J11	40
B3	A	38	H1		36	J12	40
B4	B	38	H2		36	J14	40
B5	C	38	H3		36	J20	40
C9	A	38	H4		36	J22	40
C10	B	38	J4		37	P4	40
C12	D	38	J7	A	40	T10	41
C14		38	J8	B	40		

: Relay Blocks

Code	See Page	Relay Blocks (Relay Block Location)
2	22	Engine Room R/B (Engine Compartment Left)

: Junction Block and Wire Harness Connector

Code	See Page	Junction Block and Wire Harness (Connector Location)
IB	26	Engine Room Main Wire and Driver Side J/B (Lower Finish Panel)
IH	27	Instrument Panel Wire and Driver Side J/B (Lower Finish Panel)

: Connector Joining Wire Harness and Wire Harness

Code	See Page	Joining Wire Harness and Wire Harness (Connector Location)
EB2	48	Engine No.2 Wire and Engine Room Main Wire (Near the Engine Room R/B)
IB3	50	Instrument Panel Wire and Engine Room Main Wire (Left Kick Panel)
IB4		
IH1	52	Instrument Panel Wire and Instrument Panel Wire (Near the J/B No.1)
II1	52	Instrument Panel No.3 Wire and Instrument Panel Wire (Near the Combination Meter)
IO1	54	Engine Wire and Instrument Panel Wire (Right Side of the Blower Unit)
IP4	54	Instrument Panel Wire and Engine Room Main Wire (Right Kick Panel)
IP5		

▽ : **Ground Points**

Code	See Page	Ground Points Location
EA	48	Front Right Fender
EB	48	Front Left Fender
EG	48	Rear Bank of Left Cylinder Head
IH	50	Left Kick Panel
IJ	50	Near the Right Side of Steering Column

Front Fog Light

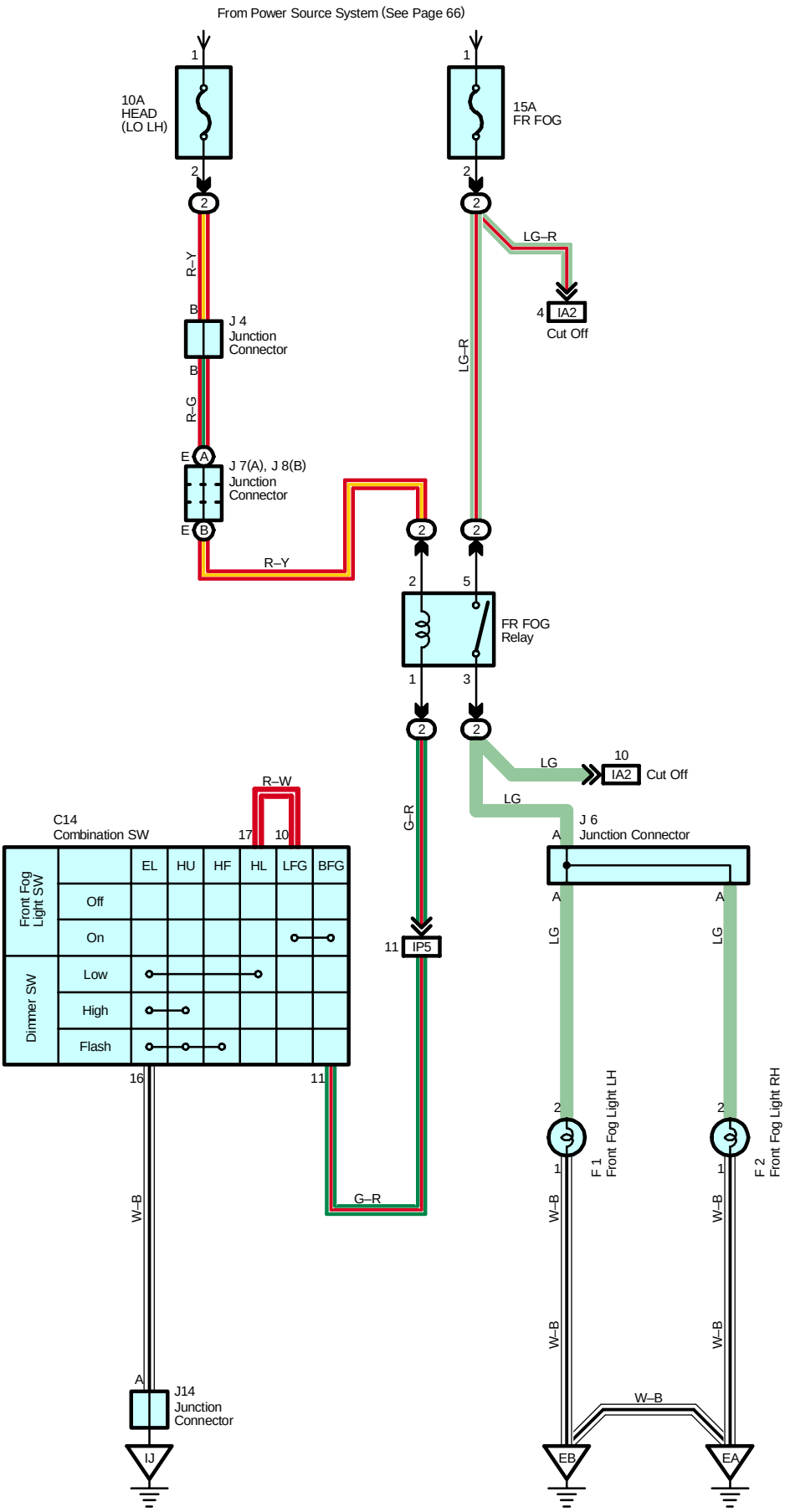

Service Hints

FR FOG Relay

5–3 : Closed with the light control SW at HEAD position, dimmer SW at LOW position and front fog light SW on

: Parts Location

Code	See Page	Code	See Page	Code	See Page
C14	38	J4	37	J8 B	40
F1	36	J6	37	J14	40
F2	36	J7 A	40		

: Relay Blocks

Code	See Page	Relay Blocks (Relay Block Location)
2	22	Engine Room R/B (Engine Compartment Left)

: Connector Joining Wire Harness and Wire Harness

Code	See Page	Joining Wire Harness and Wire Harness (Connector Location)
IA2	50	Floor No.2 Wire and Engine Room Main Wire (Left Kick Panel)
IP5	54	Instrument Panel Wire and Engine Room Main Wire (Right Kick Panel)

: Ground Points

Code	See Page	Ground Points Location
EA	48	Front Right Fender
EB	48	Front Left Fender
IJ	50	Near the Right Side of Steering Column

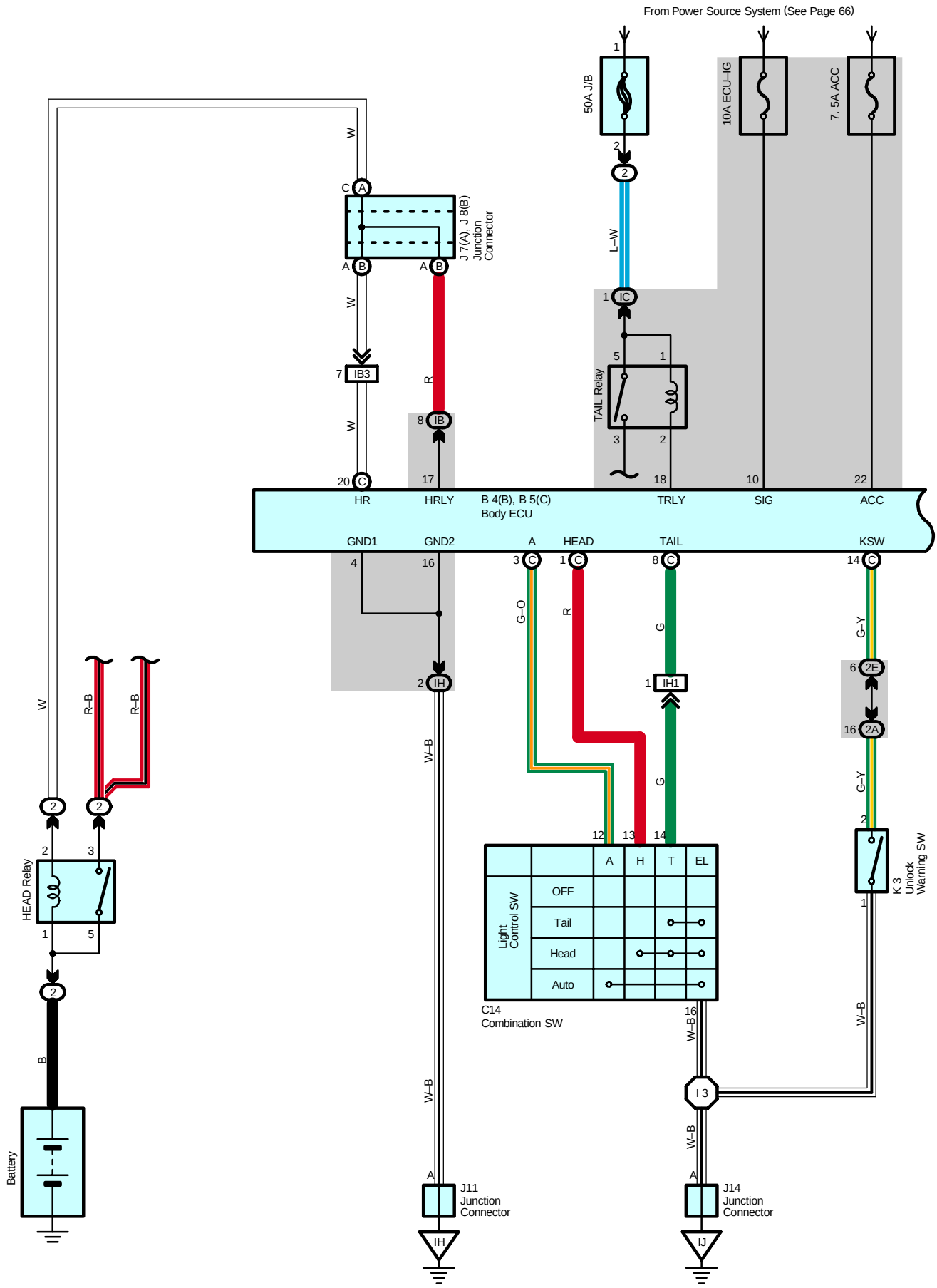
From Power Source System (See Page 66)
50A J/B
10A ECU-IG
7. 5A ACC
L-W
J 7(A), J 8(B) Junction Connector
IB3
IB
IC
TAIL Relay
HR
HRLY
B 4(B), B 5(C) Body ECU
TRLY
SIG
ACC
GND1
GND2
A
HEAD
TAIL
KSW
IH
IH1
2E
2A
K 3 Unlock Warning SW
HEAD Relay
Battery
Light Control SW
OFF
Tail
Head
Auto
C14 Combination SW
I 3
J11 Junction Connector
J14 Junction Connector

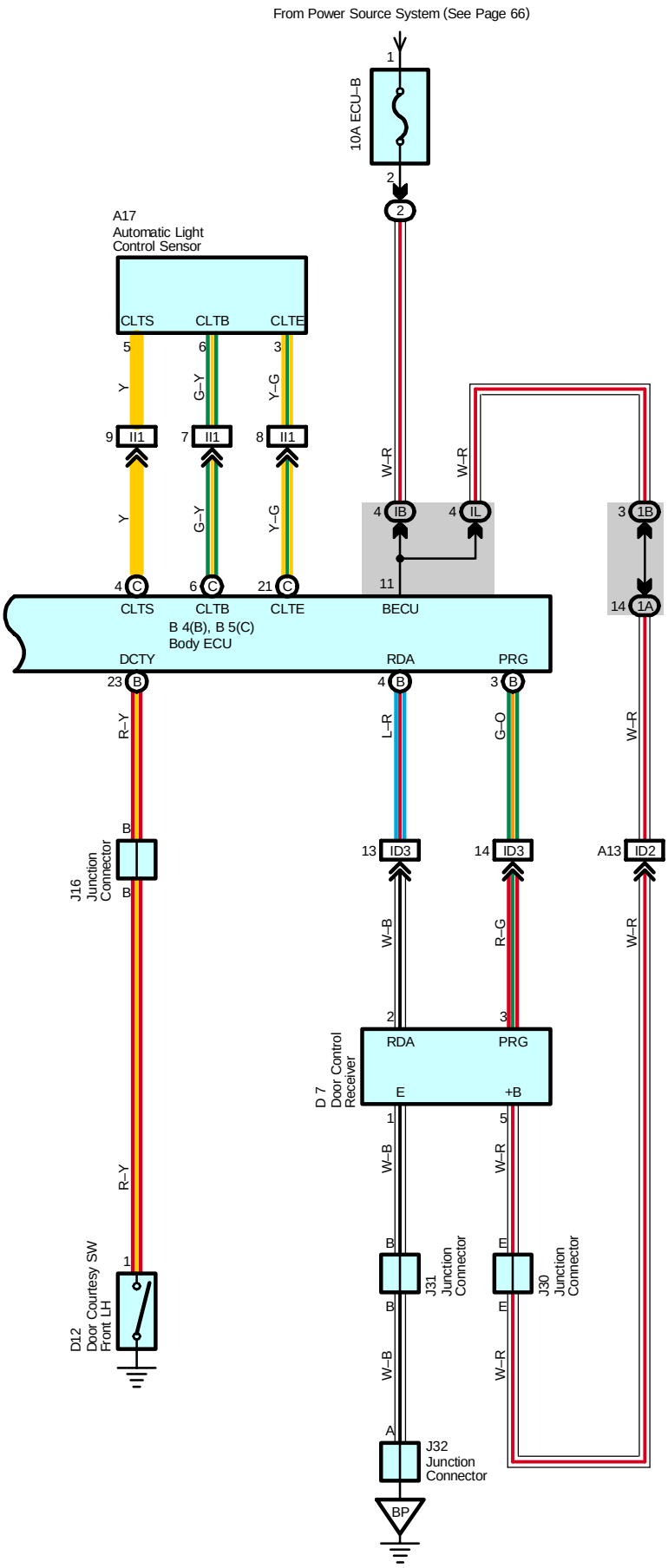
From Power Source System (See Page 66)
10A ECU–B
A17
Automatic Light
Control Sensor
CLTS
CLTB
CLTE
B 4(B), B 5(C)
Body ECU
BECU
DCTY
RDA
PRG
J16
Junction
Connector
D 7
Door Control
Receiver
E
+B
D12
Door Courtesy SW
Front LH
J31
Junction
Connector
J30
Junction
Connector
J32
Junction
Connector
BP

Automatic Light Control

System Outline

The automatic light control system works when the light control SW is turned to AUTO. This automatic light control sensor detects the brightness around the vehicle. By this function, the system automatically turns the headlight on if the brightness is below the regular level and turns the headlight off when the surroundings become brighter than the regular level.

Service Hints

TAIL Relay

5–3 : Closed with the light control SW at HEAD or TAIL position

HEAD Relay

5–3 : Closed with the light control SW at HEAD position or dimmer SW at FLASH position
Closed with the engine running and parking brake released (Parking brake SW off)

Body ECU

10–Ground : Approx. 12 volts with the ignition SW at ON or ST position
4, 16–Ground : Always continuity
11–Ground : Always approx. 12 volts

D12 Door Courtesy SW Front LH

1–Ground : Closed with the driver door open

: Parts Location

Code		See Page	Code		See Page	Code	See Page
A17		38	D12		42	J16	40
B4	B	38	J7	A	40	J30	43
B5	C	38	J8	B	40	J31	43
C14		38	J11		40	J32	43
D7		42	J14		40	K3	40

: Relay Blocks

Code	See Page	Relay Blocks (Relay Block Location)
2	22	Engine Room R/B (Engine Compartment Left)

: Junction Block and Wire Harness Connector

Code	See Page	Junction Block and Wire Harness (Connector Location)
IB	26	Engine Room Main Wire and Driver Side J/B (Lower Finish Panel)
IC		
IH	27	Instrument Panel Wire and Driver Side J/B (Lower Finish Panel)
IL		
1A	30	Instrument Panel Wire and J/B No.1 (Instrument Panel Reinforcement Left)
1B		
2A	32	Instrument Panel Wire and J/B No.2 (Instrument Panel Reinforcement Center)
2E		

: Connector Joining Wire Harness and Wire Harness

Code	See Page	Joining Wire Harness and Wire Harness (Connector Location)
IB3	50	Instrument Panel Wire and Engine Room Main Wire (Left Kick Panel)
ID2	50	Instrument Panel Wire and Floor No.2 Wire (Left Kick Panel)
ID3		
IH1	52	Instrument Panel Wire and Instrument Panel Wire (Near the J/B No.1)
II1	52	Instrument Panel No.3 Wire and Instrument Panel Wire (Near the Combination Meter)

: Ground Points

Code	See Page	Ground Points Location
IH	50	Left Kick Panel
IJ	50	Near the Right Side of Steering Column
BP	58	Left Quarter Panel Inner

: **Splice Points**

Code	See Page	Wire Harness with Splice Points	Code	See Page	Wire Harness with Splice Points
I3	52	Instrument Panel Wire			

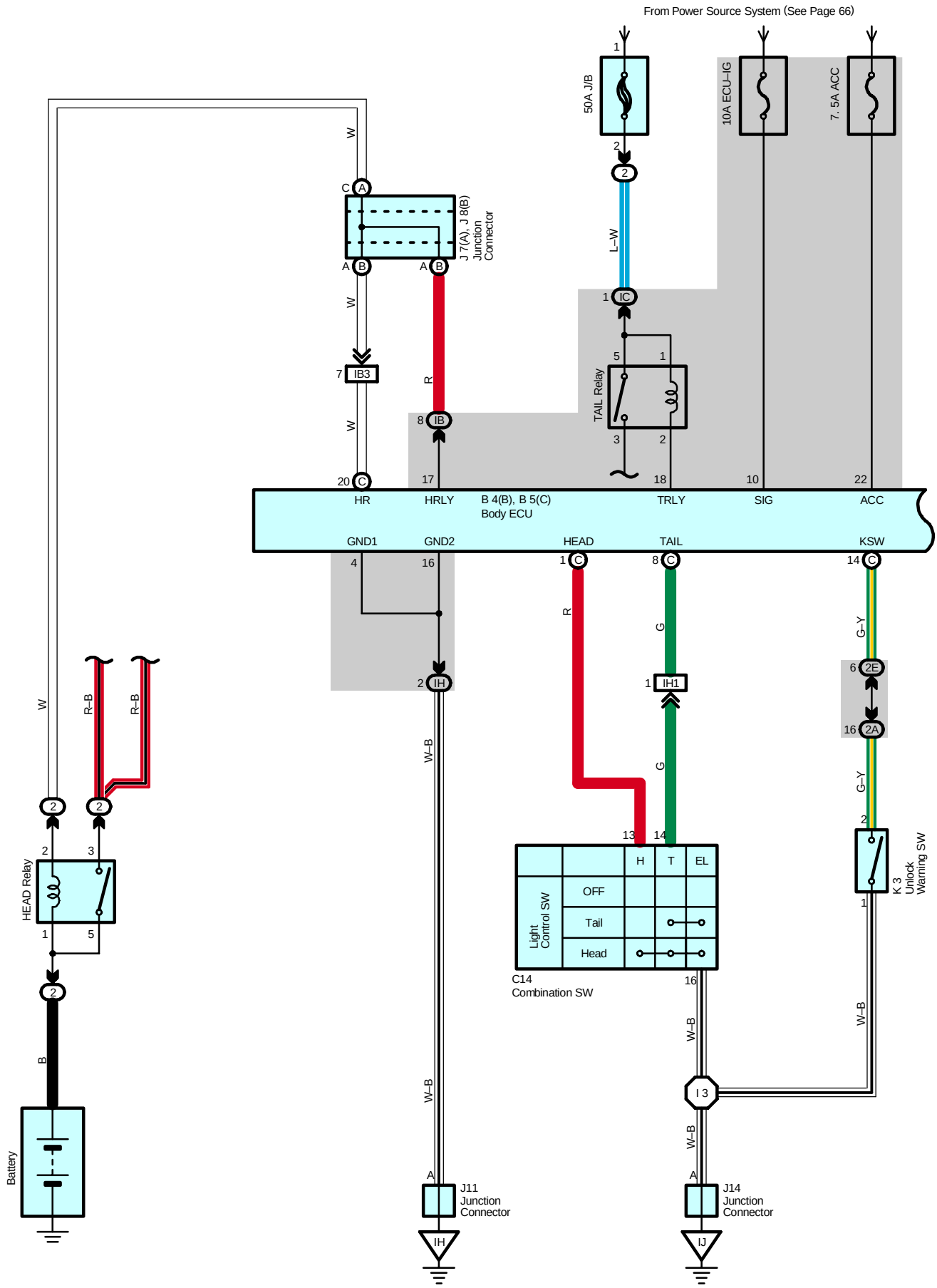
From Power Source System (See Page 66)
50A J/B
10A ECU-IG
7. 5A ACC
L-W
J 7(A), J 8(B) Junction Connector
IB3
IB
IC
TAIL Relay
HR
HRLY
B 4(B), B 5(C) Body ECU
TRLY
SIG
ACC
GND1
GND2
HEAD
TAIL
KSW
IH
IH1
2E
2A
K 3 Unlock Warning SW
HEAD Relay
Battery
Light Control SW
OFF
Tail
Head
H
T
EL
C14 Combination SW
I 3
J11 Junction Connector
J14 Junction Connector
W
R
G
G-Y
W-B
R-B
B

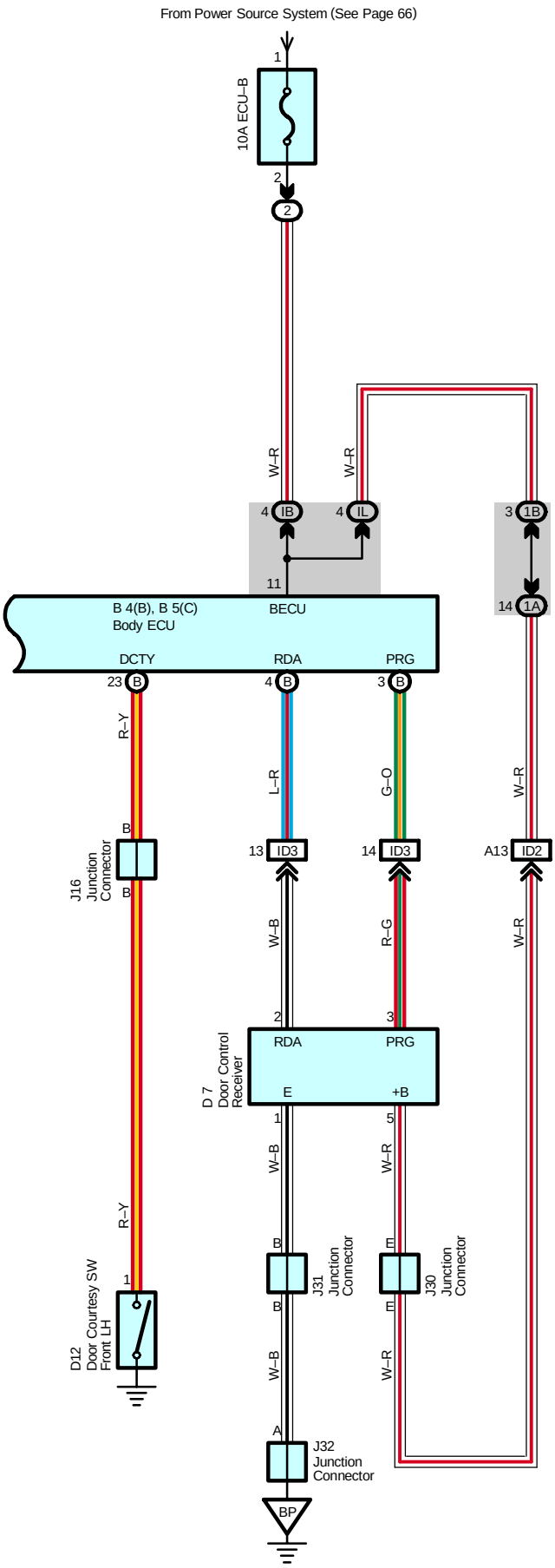
From Power Source System (See Page 66)
10A ECU–B
1
2
2
W–R
W–R
4 IB
4 IL
3 1B
11
14 1A
B 4(B), B 5(C)
Body ECU
BECU
DCTY
RDA
PRG
23 B
4 B
3 B
R–Y
L–R
G–O
W–R
B
J16
Junction
Connector
B
13 ID3
14 ID3
A13 ID2
W–B
R–G
W–R
2
3
D 7
Door Control
Receiver
RDA
PRG
E
+B
1
5
W–B
W–R
R–Y
B
J31
Junction
Connector
E
J30
Junction
Connector
1
D12
Door Courtesy SW
Front LH
B
E
W–B
W–R
A
J32
Junction
Connector
BP

Light Auto Turn Off System

System Outline

With light on and ignition SW turned off, when the driver's door is opened, the body ECU operates and the current is cut off which flows from TERMINAL 18 of the body ECU to TERMINAL (C) 8 in taillight circuit and from TERMINAL 17 to TERMINAL (C) 1 in headlight circuit.
As a result, all lights are turned off automatically.

Service Hints

TAIL Relay
5–3 : Closed with the light control SW at HEAD or TAIL position

HEAD Relay
5–3 : Closed with the light control SW at HEAD position or dimmer SW at FLASH position
Closed with the engine running and parking brake released (Parking brake SW off)

Body ECU
10–Ground : Approx. 12 volts with the ignition SW at ON or ST position
4, 16–Ground : Always continuity
11–Ground : Always approx. 12 volts

D12 Door Courtesy SW Front LH
1–Ground : Closed with the driver door open

: Parts Location

Code		See Page	Code		See Page	Code	See Page
B4	B	38	J7	A	40	J30	43
B5	C	38	J8	B	40	J31	43
C14		38	J11		40	J32	43
D7		42	J14		40	K3	40
D12		42	J16		40		

: Relay Blocks

Code	See Page	Relay Blocks (Relay Block Location)
2	22	Engine Room R/B (Engine Compartment Left)

: Junction Block and Wire Harness Connector

Code	See Page	Junction Block and Wire Harness (Connector Location)
IB	26	Engine Room Main Wire and Driver Side J/B (Lower Finish Panel)
IC		
IH	27	Instrument Panel Wire and Driver Side J/B (Lower Finish Panel)
IL		
1A	30	Instrument Panel Wire and J/B No.1 (Instrument Panel Reinforcement Left)
1B		
2A	32	Instrument Panel Wire and J/B No.2 (Instrument Panel Reinforcement Center)
2E		

: Connector Joining Wire Harness and Wire Harness

Code	See Page	Joining Wire Harness and Wire Harness (Connector Location)
IB3	50	Instrument Panel Wire and Engine Room Main Wire (Left Kick Panel)
ID2	50	Instrument Panel Wire and Floor No.2 Wire (Left Kick Panel)
ID3		
IH1	52	Instrument Panel Wire and Instrument Panel Wire (Near the J/B No.1)

: Ground Points

Code	See Page	Ground Points Location
IH	50	Left Kick Panel
IJ	50	Near the Right Side of Steering Column
BP	58	Left Quarter Panel Inner

: **Splice Points**

Code	See Page	Wire Harness with Splice Points	Code	See Page	Wire Harness with Splice Points
I3	52	Instrument Panel Wire			

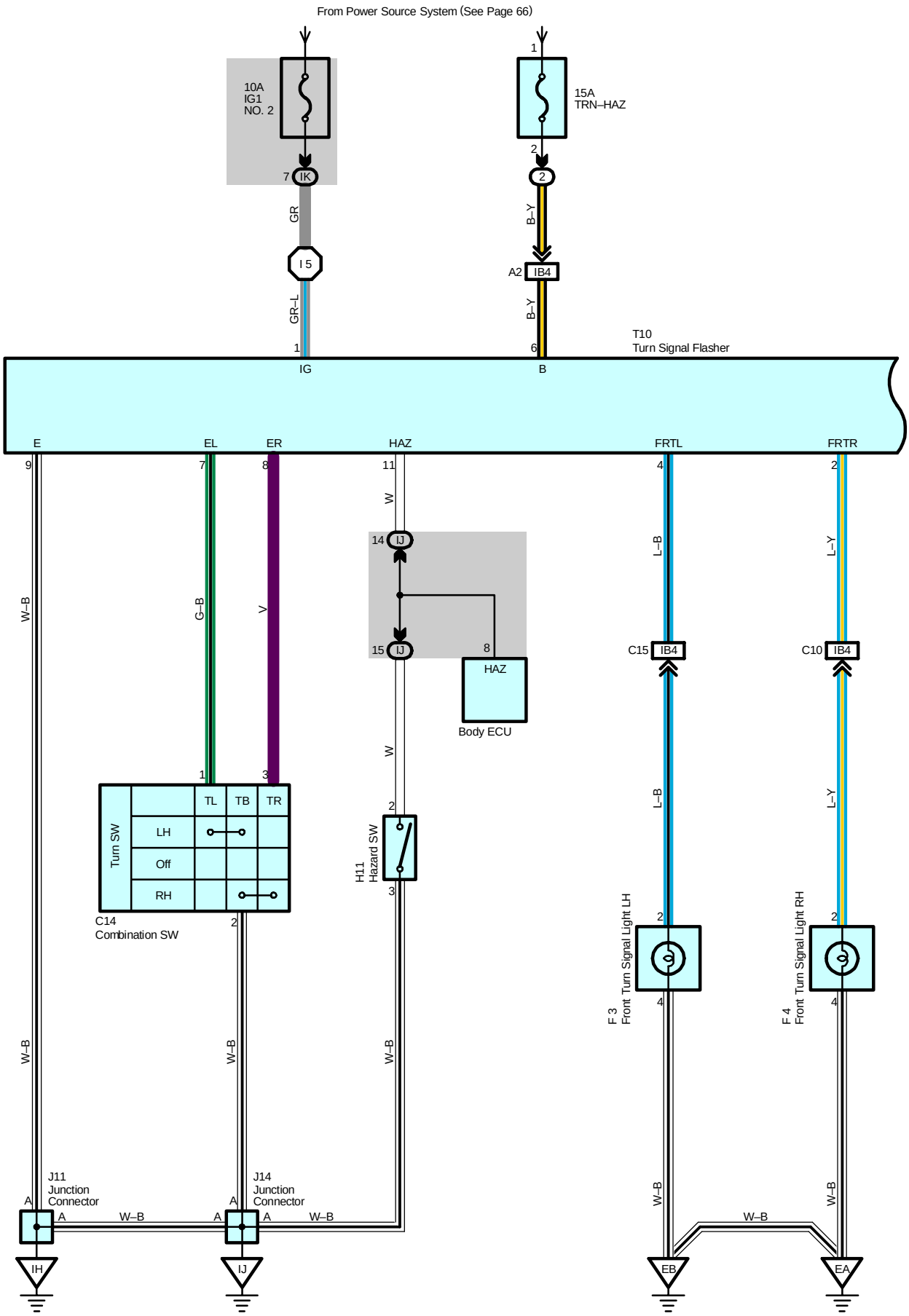
From Power Source System (See Page 66)
10A
IG1
NO. 2
15A
TRN–HAZ
7 IK
GR
I 5
GR–L
1
IG
1
2
2
B–Y
A2 IB4
B–Y
6
B
T10
Turn Signal Flasher
E
EL
ER
HAZ
FRTL
FRTR
9
7
8
11
4
2
W
14 IJ
15 IJ
8
HAZ
Body ECU
L–B
L–Y
C15 IB4
C10 IB4
W–B
G–B
V
W
1
3
TL
TB
TR
Turn SW
LH
Off
RH
C14
Combination SW
2
H11
Hazard SW
3
L–B
L–Y
2
2
F 3
Front Turn Signal Light LH
F 4
Front Turn Signal Light RH
4
4
W–B
W–B
W–B
W–B
W–B
W–B
J11
Junction
Connector
J14
Junction
Connector
A
A
W–B
A
A
W–B
W–B
IH
IJ
EB
EA

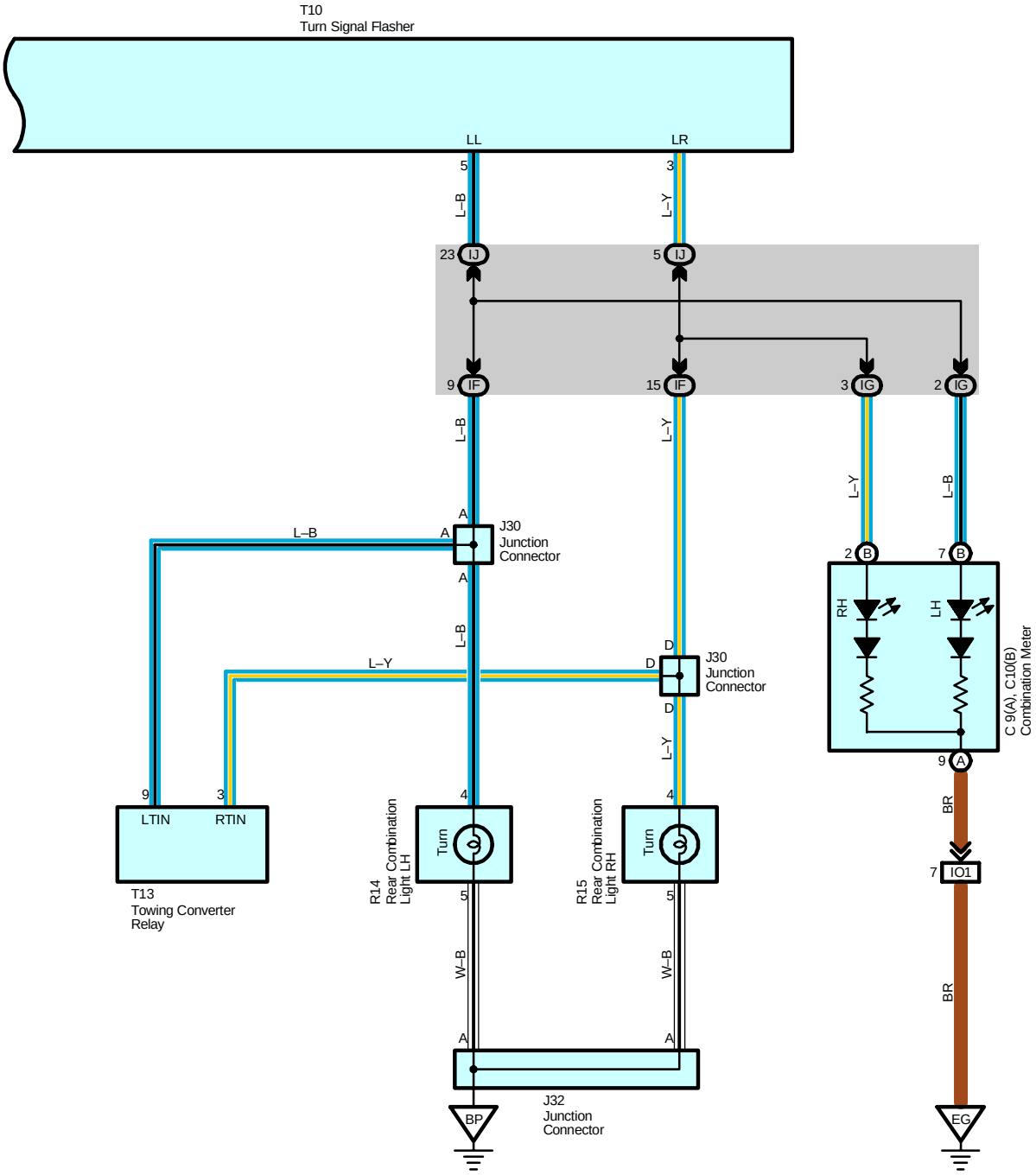
T10
Turn Signal Flasher
LL
LR
5
3
L–B
L–Y
23 IJ
5 IJ
9 IF
15 IF
3 IG
2 IG
L–B
L–Y
L–Y
L–B
A
A
J30
Junction
Connector
A
L–B
2 B
7 B
RH
LH
C 9(A), C10(B)
Combination Meter
L–B
L–Y
D
D
J30
Junction
Connector
D
L–Y
9 A
9
3
LTIN
RTIN
T13
Towing Converter
Relay
4
Turn
R14
Rear Combination
Light LH
4
Turn
R15
Rear Combination
Light RH
BR
7 IO1
5
5
W–B
W–B
BR
A
A
J32
Junction
Connector
BP
EG

Turn Signal and Hazard Warning Light

Service Hints

T10 Turn Signal Flasher Relay

1–Ground : Approx. 12 volts with the ignition SW at ON position
9–Ground : Always continuity
6–Ground : Always approx. 12 volts

: Parts Location

Code		See Page	Code	See Page	Code	See Page
C9	A	38	H11	39	R14	44
C10	B	38	J11	40	R15	44
C14		38	J14	40	T10	41
F3		36	J30	43	T13	45
F4		36	J32	43		

: Relay Blocks

Code	See Page	Relay Blocks (Relay Block Location)
2	22	Engine Room R/B (Engine Compartment Left)

: Junction Block and Wire Harness Connector

Code	See Page	Junction Block and Wire Harness (Connector Location)
IF	26	Floor No.2 Wire and Driver Side J/B (Lower Finish Panel)
IG	27	Instrument Panel Wire and Driver Side J/B (Lower Finish Panel)
IJ		
IK		

: Connector Joining Wire Harness and Wire Harness

Code	See Page	Joining Wire Harness and Wire Harness (Connector Location)
IB4	50	Instrument Panel Wire and Engine Room Main Wire (Left Kick Panel)
IO1	54	Engine Wire and Instrument Panel Wire (Right Side of the Blower Unit)

: Ground Points

Code	See Page	Ground Points Location
EA	48	Front Right Fender
EB	48	Front Left Fender
EG	48	Rear Bank of Left Cylinder Head
IH	50	Left Kick Panel
IJ	50	Near the Right Side of Steering Column
BP	58	Left Quarter Panel Inner

: Splice Points

Code	See Page	Wire Harness with Splice Points	Code	See Page	Wire Harness with Splice Points
I5	52	Instrument Panel Wire			

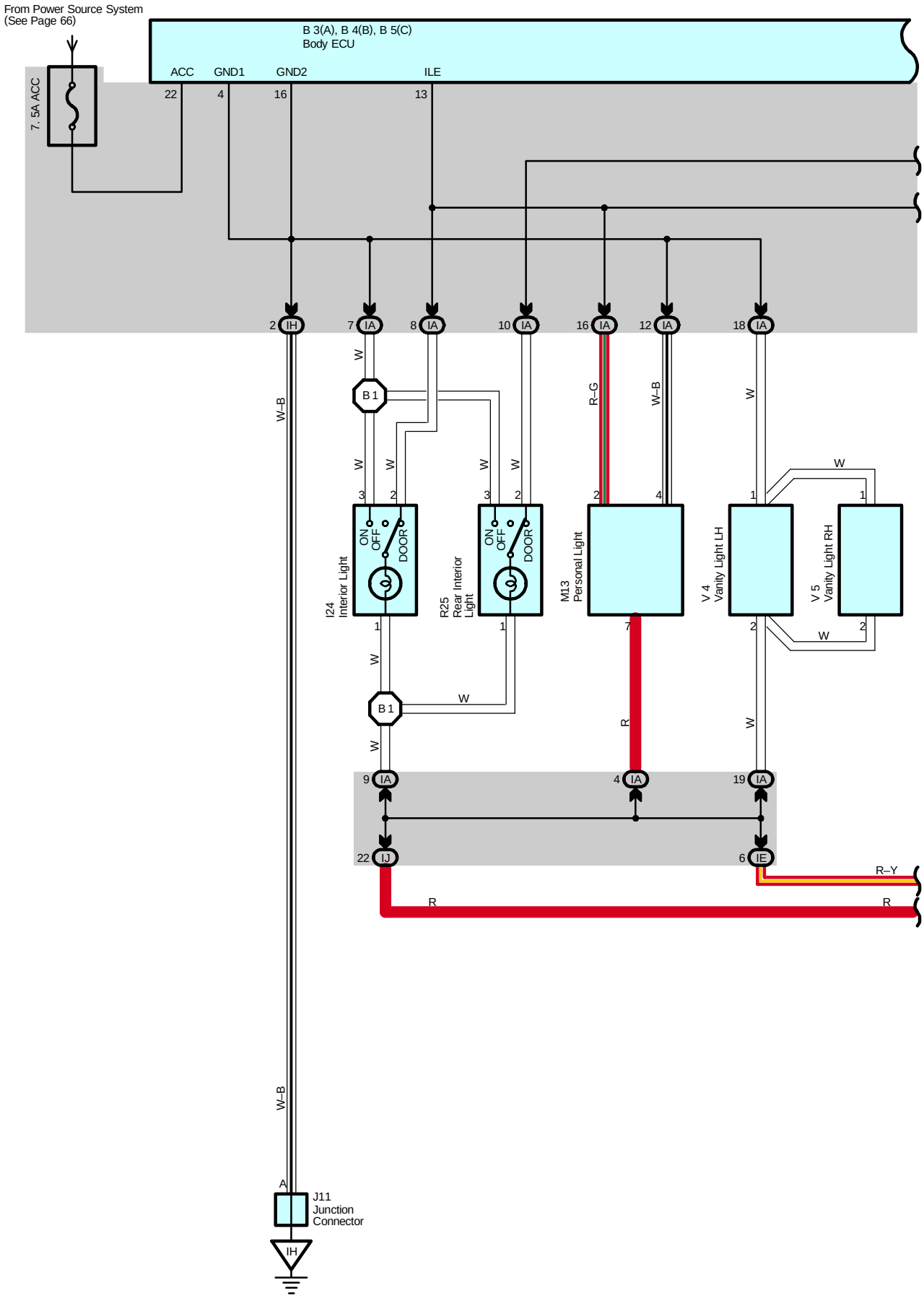
From Power Source System
(See Page 66)
B 3(A), B 4(B), B 5(C)
Body ECU
ACC
GND1
GND2
ILE
22
4
16
13
7. 5A ACC
2 IH
7 IA
8 IA
10 IA
16 IA
12 IA
18 IA
W–B
W
B 1
R–G
W–B
W
I24
Interior Light
ON
OFF
DOOR
R25
Rear Interior
Light
M13
Personal Light
V 4
Vanity Light LH
V 5
Vanity Light RH
9 IA
4 IA
19 IA
22 IJ
6 IE
R–Y
R
A
J11
Junction
Connector
IH

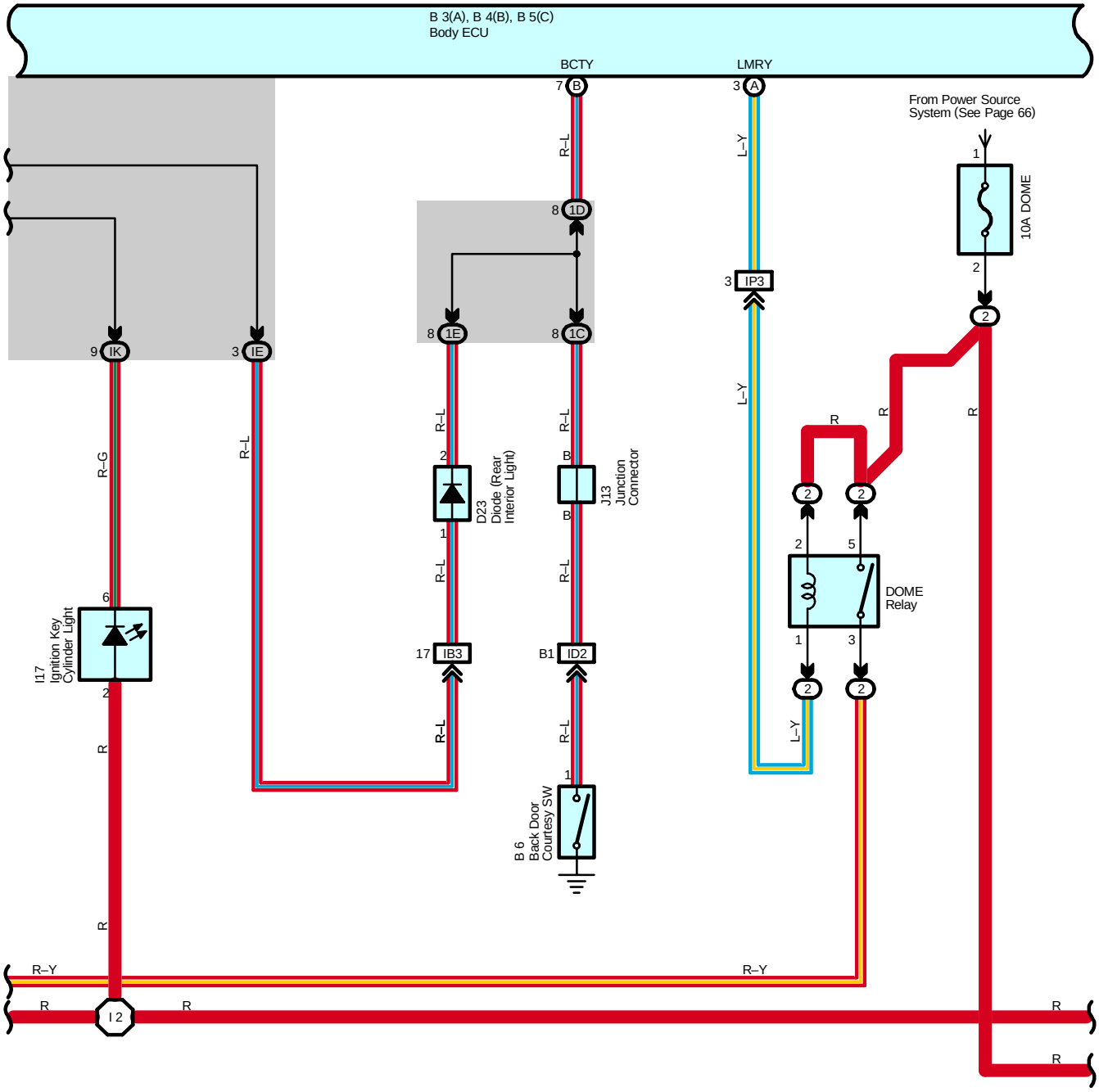
B 3(A), B 4(B), B 5(C)
Body ECU
BCTY
LMRY
From Power Source
System (See Page 66)
10A DOME
IP3
IK
IE
1E
1D
1C
D23
Diode (Rear
Interior Light)
J13
Junction
Connector
I17
Ignition Key
Cylinder Light
IB3
ID2
B 6
Back Door
Courtesy SW
DOME
Relay
I 2
R–G
R–L
L–Y
R
R–Y

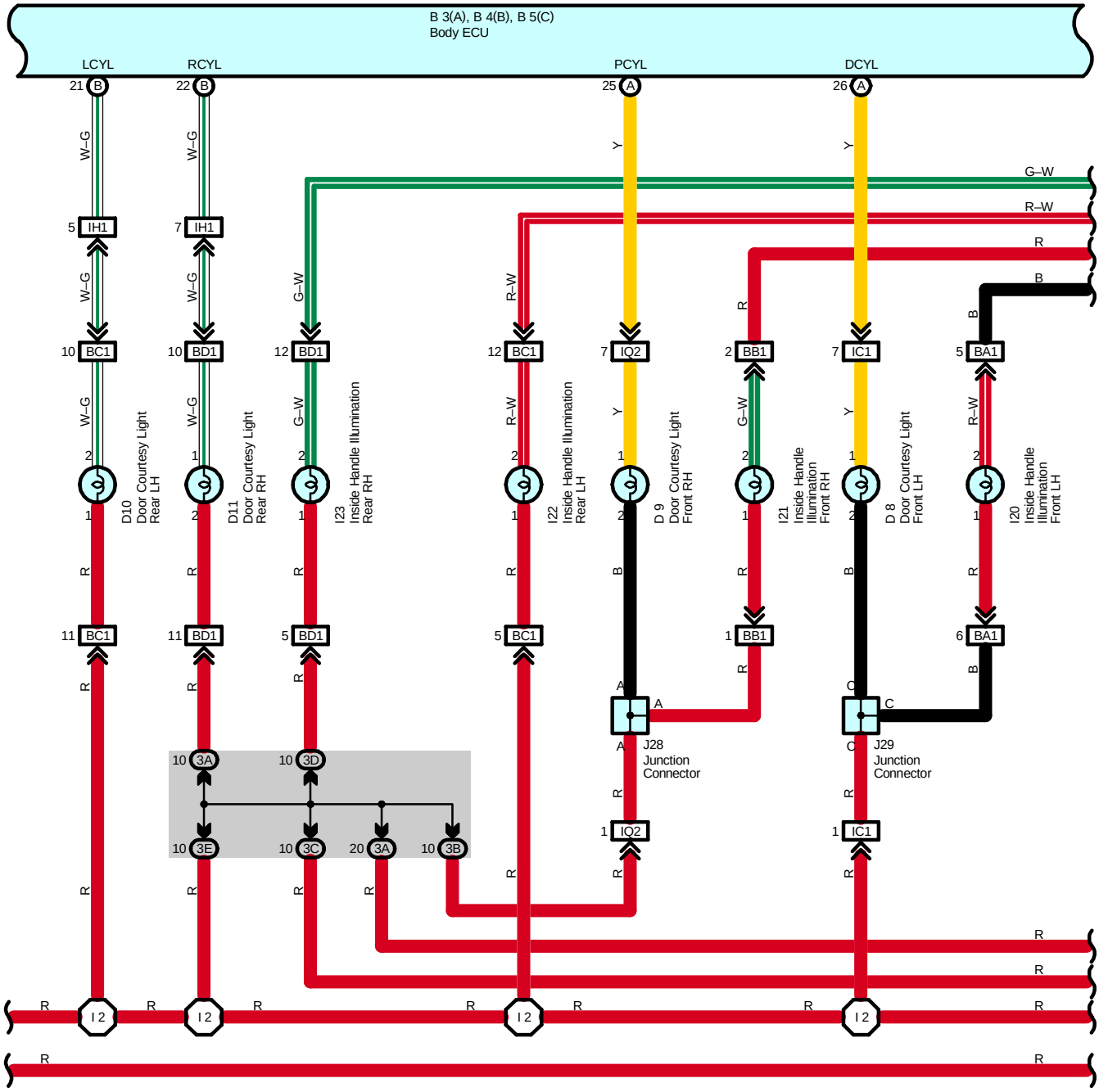
B 3(A), B 4(B), B 5(C)
Body ECU
LCYL
RCYL
PCYL
DCYL
21 B
22 B
25 A
26 A
W–G
Y
G–W
R–W
R
B
5 IH1
7 IH1
10 BC1
10 BD1
12 BD1
12 BC1
7 IQ2
2 BB1
7 IC1
5 BA1
D10 Door Courtesy Light Rear LH
D11 Door Courtesy Light Rear RH
I23 Inside Handle Illumination Rear RH
I22 Inside Handle Illumination Rear LH
D 9 Door Courtesy Light Front RH
I21 Inside Handle Illumination Front RH
D 8 Door Courtesy Light Front LH
I20 Inside Handle Illumination Front LH
11 BC1
11 BD1
5 BD1
5 BC1
1 BB1
6 BA1
10 3A
10 3D
10 3E
10 3C
20 3A
10 3B
J28 Junction Connector
J29 Junction Connector
1 IQ2
1 IC1
I 2

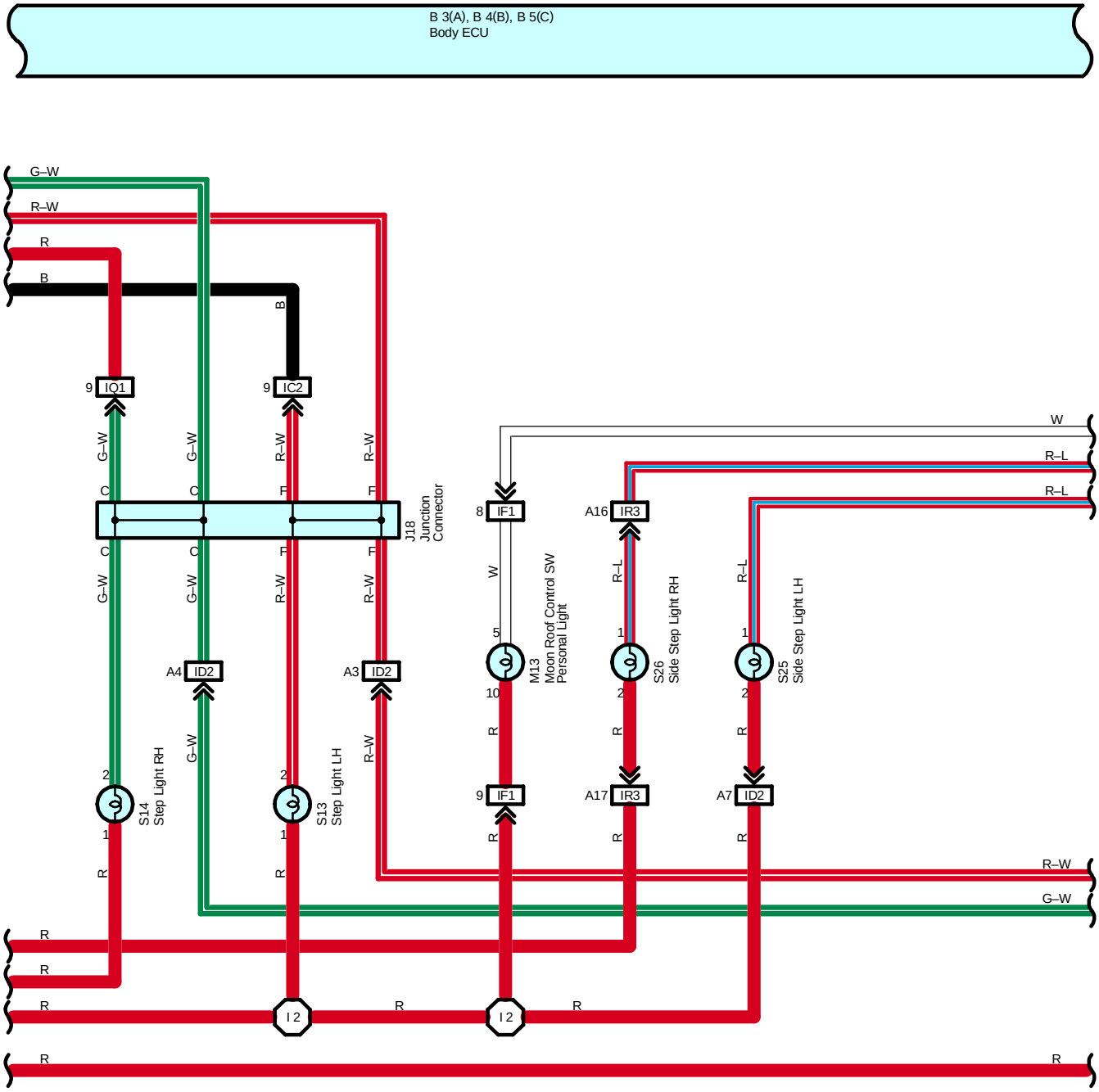
B 3(A), B 4(B), B 5(C)
Body ECU
G–W
R–W
R
B
9 IO1
9 IC2
J18
Junction
Connector
8 IF1
A16 IR3
W
R–L
R–L
M13
Moon Roof Control SW
Personal Light
S26
Side Step Light RH
S25
Side Step Light LH
A4 ID2
A3 ID2
S14
Step Light RH
S13
Step Light LH
9 IF1
A17 IR3
A7 ID2
I 2
I 2

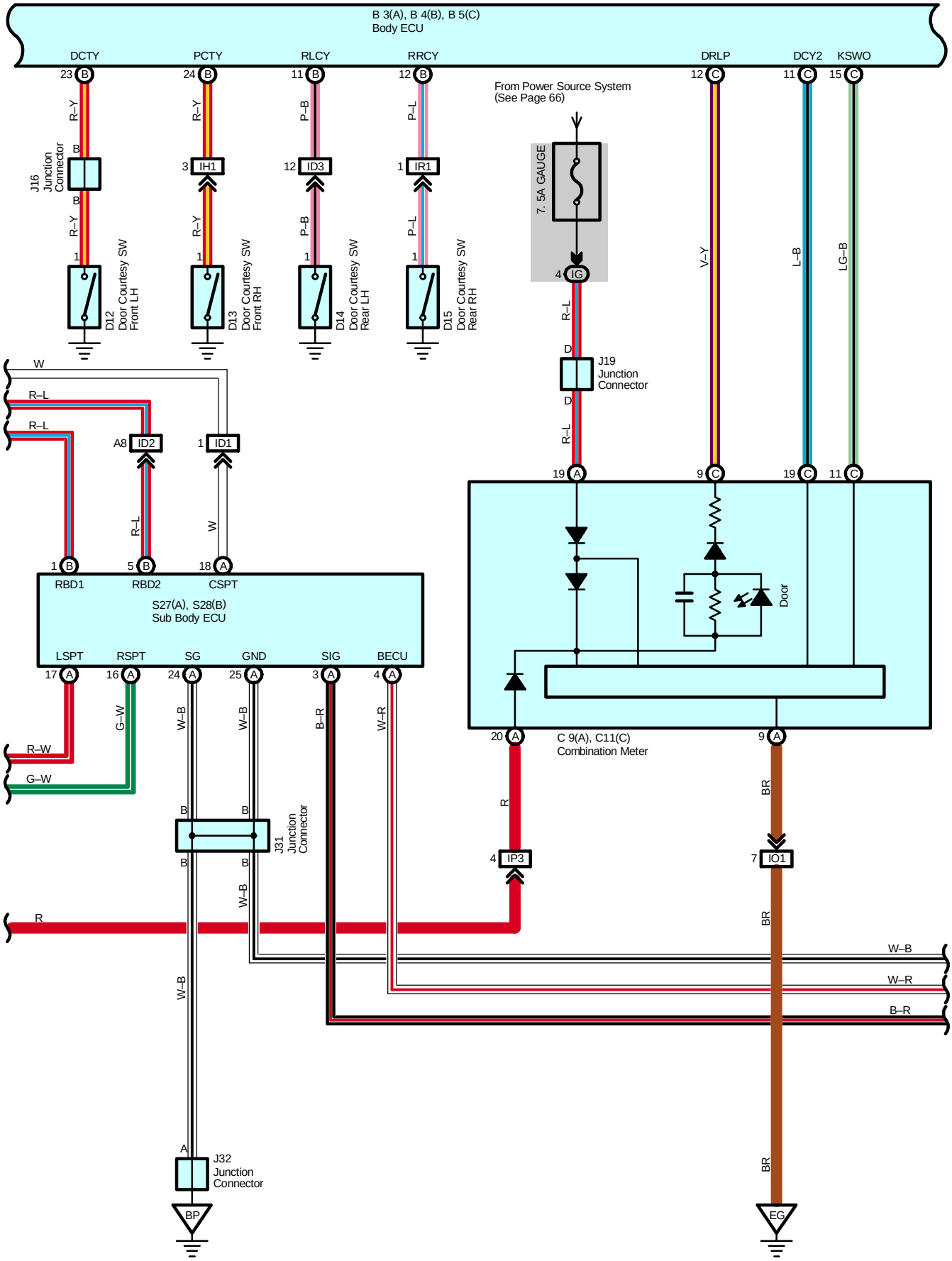
B 3(A), B 4(B), B 5(C)
Body ECU
DCTY
PCTY
RLCY
RRCY
DRLP
DCY2
KSWO
From Power Source System
(See Page 66)
7. 5A GAUGE
J16
Junction
Connector
D12
Door Courtesy SW
Front LH
D13
Door Courtesy SW
Front RH
D14
Door Courtesy SW
Rear LH
D15
Door Courtesy SW
Rear RH
IH1
ID3
IR1
IG
J19
Junction
Connector
ID2
ID1
RBD1
RBD2
CSPT
S27(A), S28(B)
Sub Body ECU
LSPT
RSPT
SG
GND
SIG
BECU
C 9(A), C11(C)
Combination Meter
Door
IP3
IO1
J31
Junction
Connector
J32
Junction
Connector
BP
EG

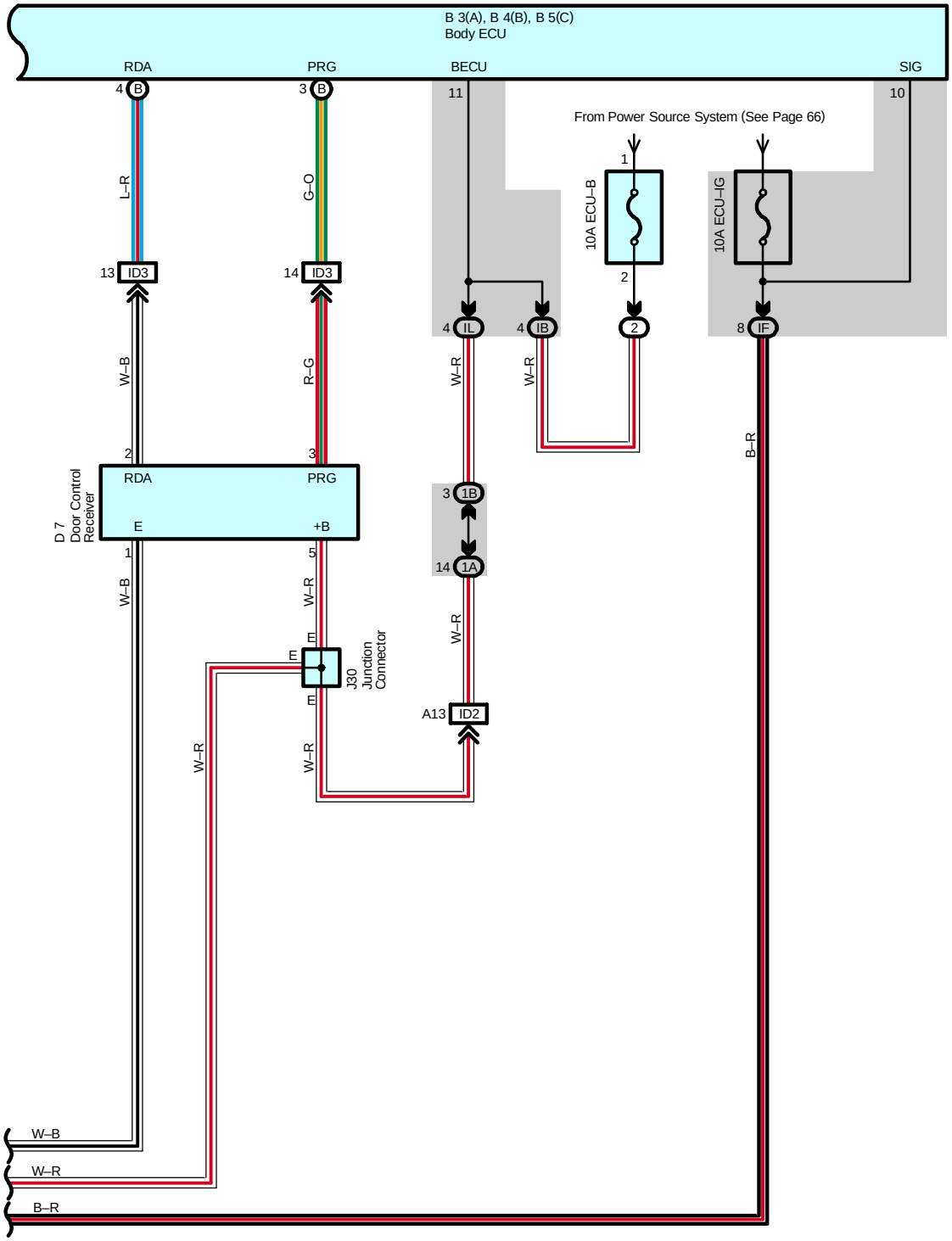
B 3(A), B 4(B), B 5(C)
Body ECU
RDA
PRG
BECU
SIG
From Power Source System (See Page 66)
10A ECU–B
10A ECU–IG
L–R
G–O
W–B
R–G
W–R
B–R
D 7
Door Control
Receiver
J30
Junction
Connector
W–B
W–R
B–R

Interior Light

System Outline

* The interior light system is controlled by the body ECU and sub–body ECU.
* This system has following features.

Normal Operation

* When the front Door LH or RH is opened, the door courtesy light front LH, RH and open door warning light is turned on. When the front door LH and RH are closed, the door courtesy light front LH, RH is turned off.
* When the rear door LH, RH or the back door is opened, door courtesy light rear LH, RH, rear interior light and the open door warning light is turned on. When the rear door LH, RH and back door are closed, the door courtesy light rear LH, RH is turned off.
* When all the doors are closed, the open door warning light is turned off.

Turn Off Function

When the ignition SW turned off and there is no change in the door courtesy SW for approx. 30 minute, the DOME relay is turned off. The DOME relay is turned on again when any of the following conditions are met.

* Ignition SW is turned from OFF position to ACC or ON position
* Change to any door courtesy SW
* Driver or front passenger door is unlocked by the key or transmitter

Immediate Turn Off Function at Door Lock

When all the doors are closed, and the driver or front passenger door is locked by the key or transmitter, the DOME relay is turned off, after approx. 80 seconds. However, when the illuminated entry system is operating, the DOME relay is turned off after the operation is completed. the DOME relay is turned on again when any of the following conditions are met.

* Ignition SW is turned from OFF position to ACC or ON position
* Change to any door courtesy SW
* Driver or front passenger door is unlocked by the key or transmitter

Illuminated Entry System

* When any door is opened, each light is turned on.
* The light remains on for approx. 15 seconds after all doors are closed, and fades out.
* With the ignition SW is at ACC or ON position, and any door open, when all the doors are closed, each light fades out immediately.
* When the ignition SW is turned to ACC or ON position during timer lighting, each light fades out immediately.
* When the doors are locked during timer lighting, each light fades out immediately.
* The lights include, the front interior light, ignition key cylinder light, and front door courtesy light LH, RH.

Service Hints

Body ECU

22–Ground : Approx. 12 volts with the ignition SW at ACC or ON position
10–Ground : Approx. 12 volts with the ignition SW at ON position
4, 16–Ground : Always continuity
11–Ground : Always approx. 12 volts

○ : **Parts Location**

Code		See Page	Code	See Page	Code		See Page
B3	A	38	D15	42	J29		43
B4	B	38	D23	39	J30		43
B5	C	38	I17	39	J31		43
B6		42	I20	43	J32		43
C9	A	38	I21	43	M13		44
C11	C	38	I22	43	R25		44
D7		42	I23	43	S13		41
D8		42	I24	43	S14		41
D9		42	J11	40	S25		45
D10		42	J13	40	S26		45
D11		42	J16	40	S27	A	45
D12		42	J18	40	S28	B	45
D13		42	J19	40	V4		45
D14		42	J28	43	V5		45

: **Relay Blocks**

Code	See Page	Relay Blocks (Relay Block Location)
2	22	Engine Room R/B (Engine Compartment Left)

: **Junction Block and Wire Harness Connector**

Code	See Page	Junction Block and Wire Harness (Connector Location)
IA	26	Roof Wire and Driver Side J/B (Lower Finish Panel)
IB	26	Engine Room Main Wire and Driver Side J/B (Lower Finish Panel)
IE		
IF	26	Floor No.2 Wire and Driver Side J/B (Lower Finish Panel)
IG	27	Instrument Panel Wire and Driver Side J/B (Lower Finish Panel)
IH		
IJ		
IK		
IL		
1A	30	Instrument Panel Wire and J/B No.1 (Instrument Panel Reinforcement Left)
1B		
1C		
1D		
1E		
3A	34	Instrument Panel Wire and J/B No.3 (Instrument Panel Reinforcement Right)
3B		
3C		
3D		
3E		

: **Connector Joining Wire Harness and Wire Harness**

Code	See Page	Joining Wire Harness and Wire Harness (Connector Location)
IB3	50	Instrument Panel Wire and Engine Room Main Wire (Left Kick Panel)
IC1	50	Front Door LH Wire and Instrument Panel Wire (Left Kick Panel)
IC2		
ID1	50	Instrument Panel Wire and Floor No.2 Wire (Left Kick Panel)
ID2		
ID3		
IF1	52	Roof Wire and Instrument Panel Wire (Upper the Driver Side J/B)
IH1	52	Instrument Panel Wire and Instrument Panel Wire (Near the J/B No.1)
IO1	54	Engine Wire and Instrument Panel Wire (Right Side of the Blower Unit)
IP3	54	Instrument Panel Wire and Engine Room Main Wire (Right Kick Panel)
IQ1	56	Front Door RH Wire and Instrument Panel Wire (Right Kick Panel)
IQ2		
IR1	56	Instrument Panel Wire and Floor Wire (Right Kick Panel)
IR3		
BA1	58	Front Door LH Wire and Front Door LH Sub Wire (Inside of Front Door LH)
BB1	58	Front Door RH Wire and Front Door RH Sub Wire (Inside of Front Door RH)
BC1	58	Rear Door LH Wire and Instrument Panel Wire (Center Pillar LH)
BD1	58	Rear Door RH Wire and Instrument Panel Wire (Center Pillar RH)

: **Ground Points**

Code	See Page	Ground Points Location
EG	48	Rear Bank of Left Cylinder Head
IH	50	Left Kick Panel
BP	58	Left Quarter Panel Inner

: **Splice Points**

Code	See Page	Wire Harness with Splice Points	Code	See Page	Wire Harness with Splice Points
I2	52	Instrument Panel Wire	B1	60	Roof Wire

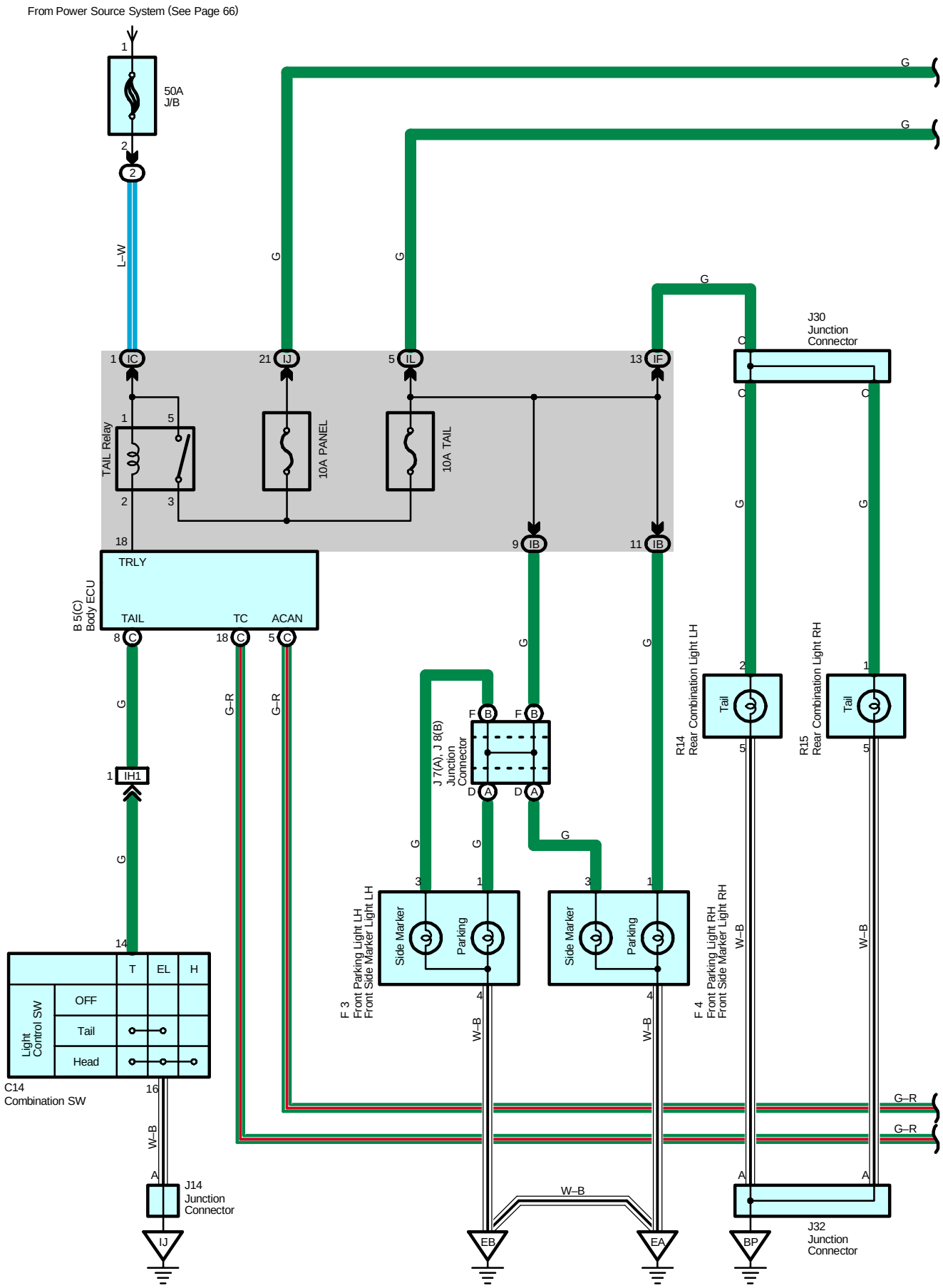
From Power Source System (See Page 66)
50A
J/B
L–W
G
G–R
W–B
TAIL Relay
10A PANEL
10A TAIL
TRLY
TAIL
TC
ACAN
B 5(C)
Body ECU
IH1
J30
Junction
Connector
R14
Rear Combination Light LH
R15
Rear Combination Light RH
Tail
J 7(A), J 8(B)
Junction
Connector
F 3
Front Parking Light LH
Front Side Marker Light LH
F 4
Front Parking Light RH
Front Side Marker Light RH
Side Marker
Parking
Light
Control SW
OFF
Tail
Head
C14
Combination SW
J14
Junction
Connector
J32
Junction
Connector
IJ
EB
EA
BP

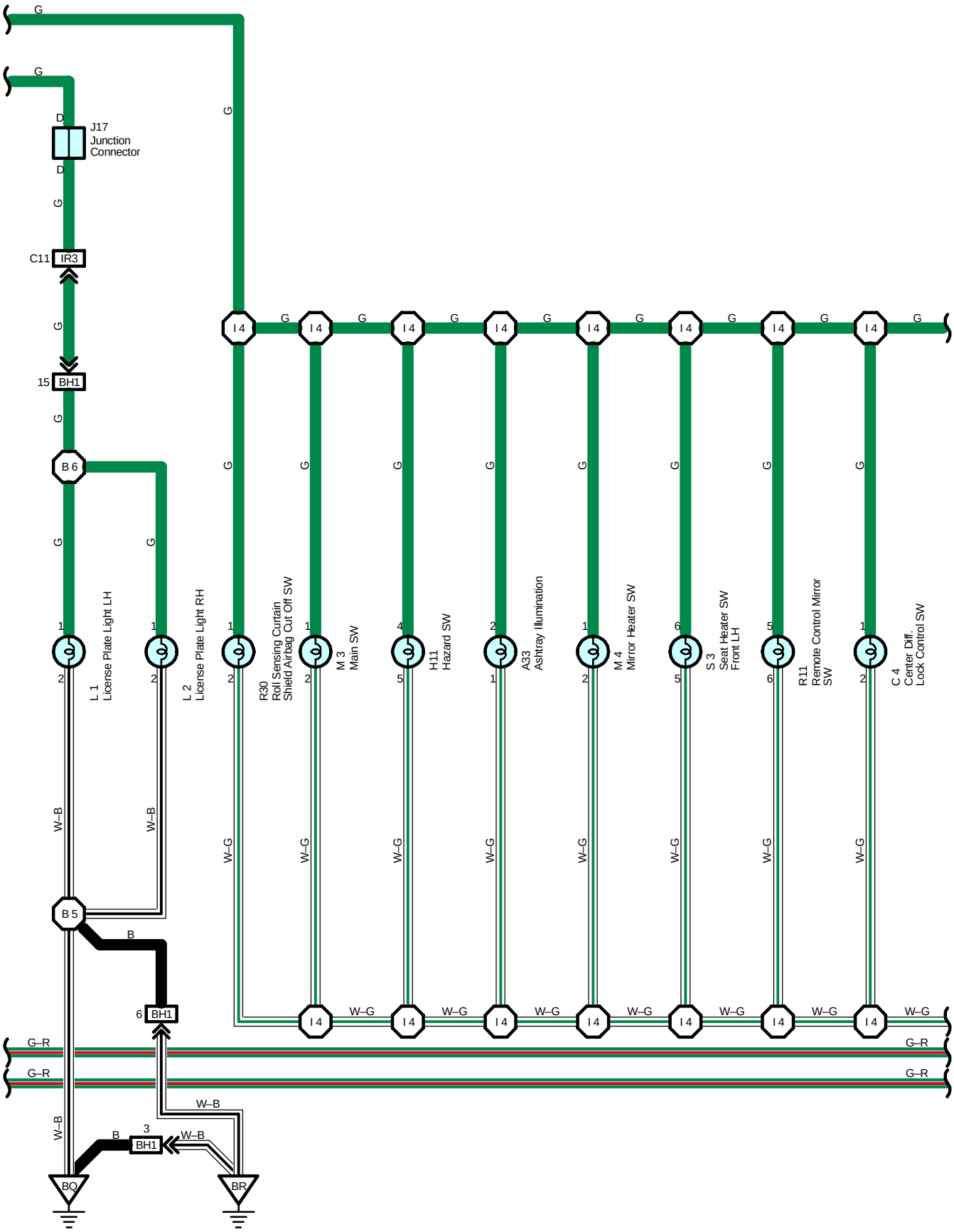
J17
Junction
Connector
C11
IR3
15
BH1
B 6
B 5
6
BH1
3
BH1
BQ
BR
L 1
License Plate Light LH
L 2
License Plate Light RH
R30
Roll Sensing Curtain
Shield Airbag Cut Off SW
M 3
Main SW
H11
Hazard SW
A33
Ashtray Illumination
M 4
Mirror Heater SW
S 3
Seat Heater SW
Front LH
R11
Remote Control Mirror
SW
C 4
Center Diff.
Lock Control SW
G
W–B
W–G
G–R
B

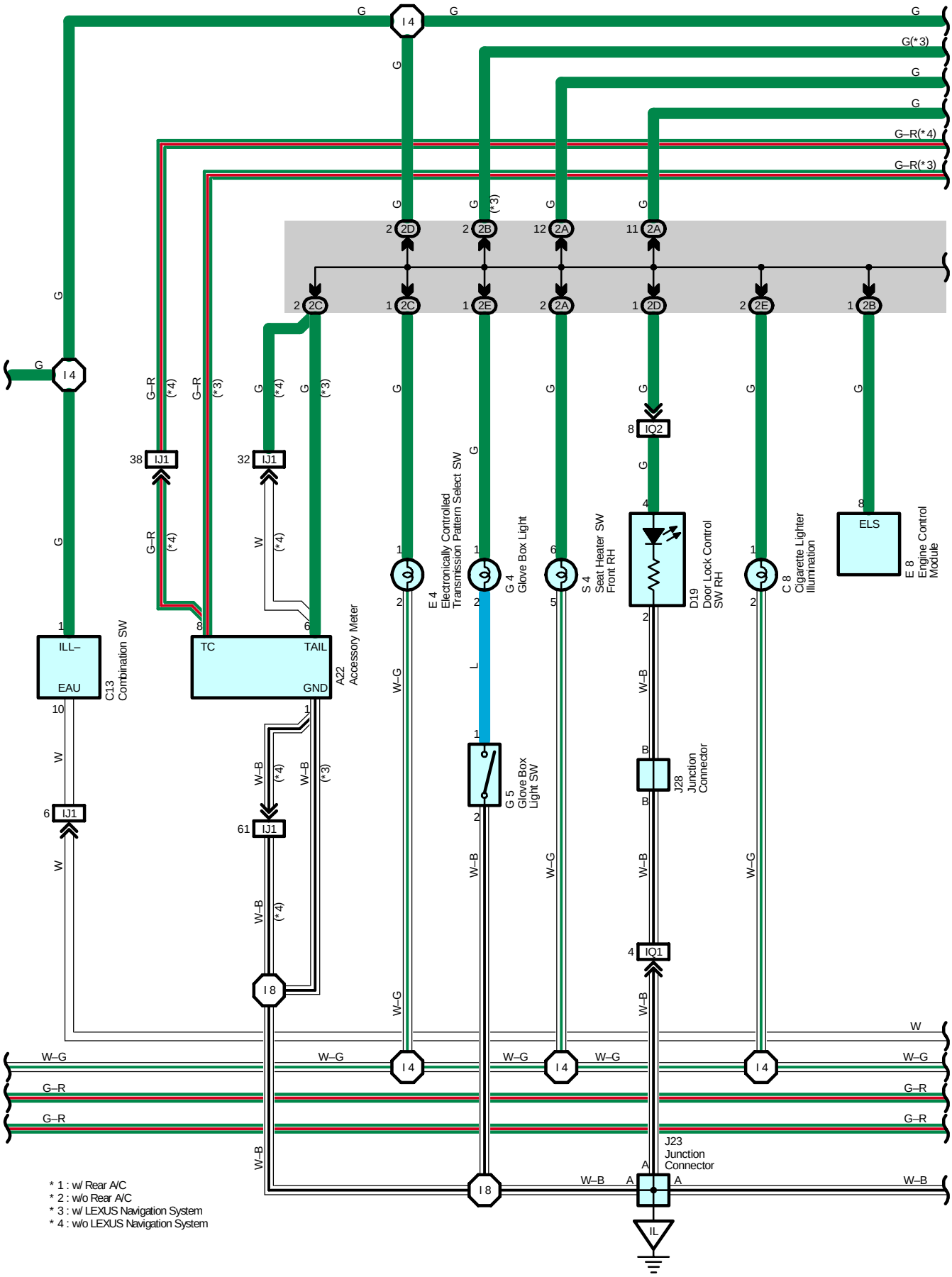
I 4
G
G(*3)
G–R(*4)
G–R(*3)
2D
2B
2A
2C
2E
IJ1
IQ2
IQ1
ILL–
EAU
C13 Combination SW
TC
TAIL
GND
A22 Accessory Meter
E 4 Electronically Controlled Transmission Pattern Select SW
G 4 Glove Box Light
S 4 Seat Heater SW Front RH
D19 Door Lock Control SW RH
C 8 Cigarette Lighter Illumination
ELS
E 8 Engine Control Module
G 5 Glove Box Light SW
J28 Junction Connector
J23 Junction Connector
I 8
W–G
W–B
G–R
W
L
IL
* 1 : w/ Rear A/C
* 2 : w/o Rear A/C
* 3 : w/ LEXUS Navigation System
* 4 : w/o LEXUS Navigation System

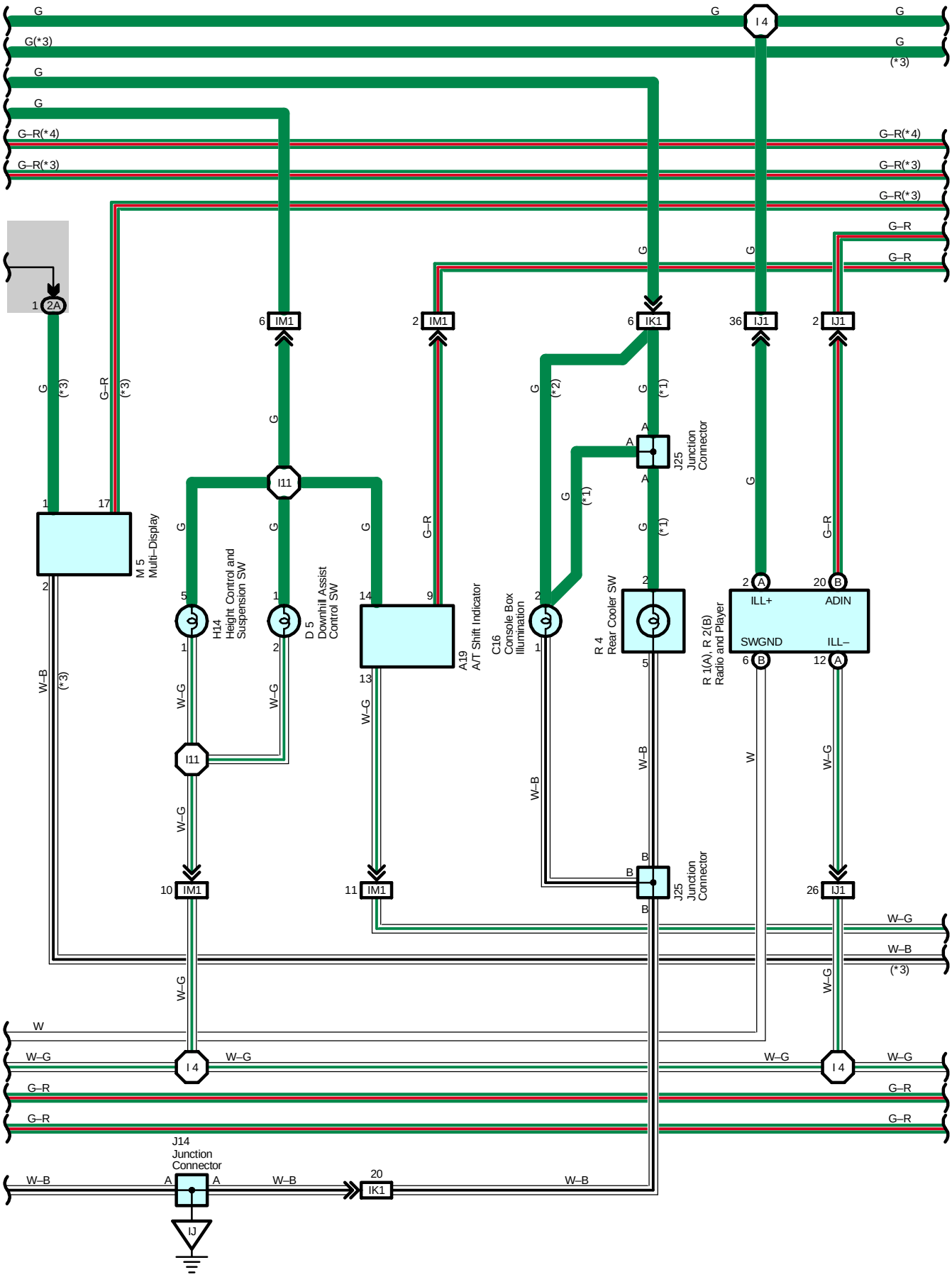

G
G(*3)
G–R(*4)
G–R(*3)
G–R
I 4
2A
IM1
IK1
IJ1
I11
M 5
Multi–Display
H14
Height Control and
Suspension SW
D 5
Downhill Assist
Control SW
A19
A/T Shift Indicator
C16
Console Box
Illumination
R 4
Rear Cooler SW
R 1(A), R 2(B)
Radio and Player
J25
Junction
Connector
ILL+
ADIN
SWGND
ILL–
W–B
W–G
W
J14
Junction
Connector
IJ

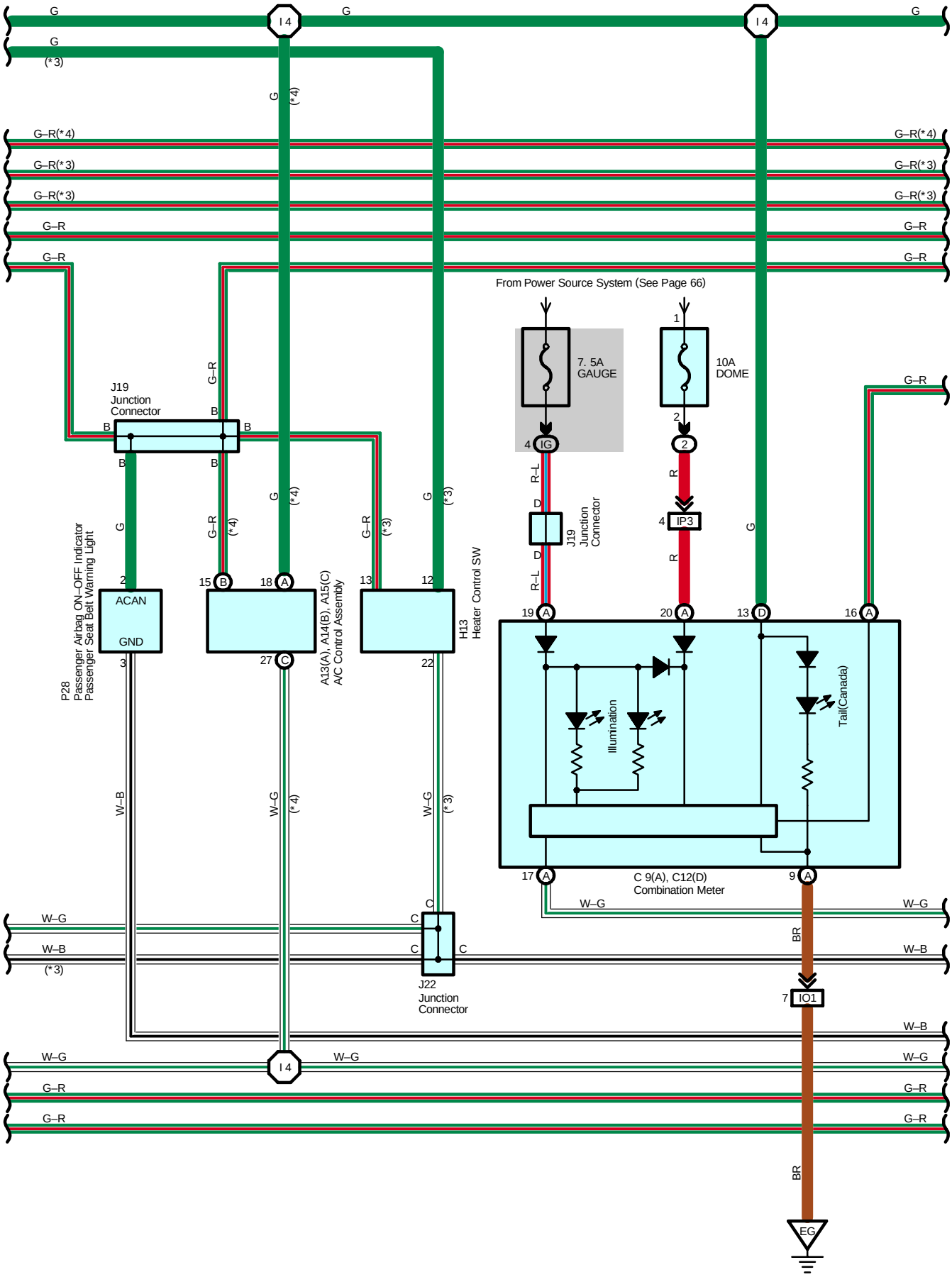
G
G
(*3)
I 4
G
I 4
G
G
(*4)
G–R(*4)
G–R(*3)
G–R(*3)
G–R
G–R
G–R(*4)
G–R(*3)
G–R(*3)
G–R
G–R
From Power Source System (See Page 66)
7. 5A
GAUGE
10A
DOME
1
2
4 IG
2
R–L
R
D
D
R–L
R
4 IP3
G
G–R
J19
Junction
Connector
B
B
B
B
B
G
G–R
(*4)
G
(*4)
G–R
(*3)
G
(*3)
2
ACAN
GND
3
15 B
18 A
27 C
13
12
22
P28
Passenger Airbag ON–OFF Indicator
Passenger Seat Belt Warning Light
A13(A), A14(B), A15(C)
A/C Control Assembly
H13
Heater Control SW
19 A
20 A
13 D
16 A
Illumination
Tail(Canada)
17 A
9 A
C 9(A), C12(D)
Combination Meter
W–B
W–G
(*4)
W–G
(*3)
W–G
W–G
W–B
(*3)
C
C
C
C
J22
Junction
Connector
BR
W–B
7 IO1
W–B
W–G
I 4
W–G
W–G
G–R
G–R
G–R
G–R
BR
EG

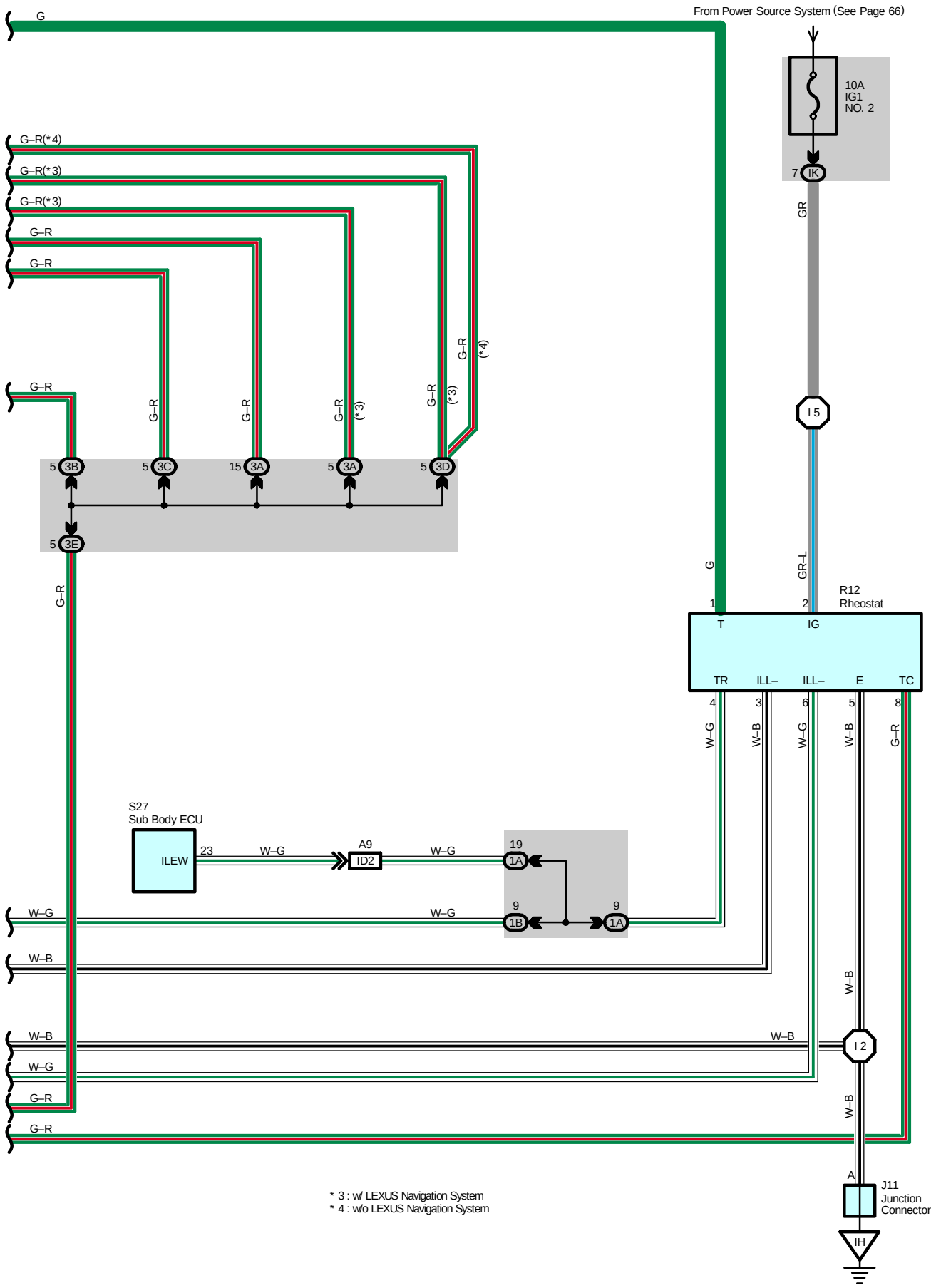
From Power Source System (See Page 66)
G
10A
IG1
NO. 2
7 IK
GR
I 5
G–R(*4)
G–R(*3)
G–R(*3)
G–R
G–R
G–R
G–R
G–R
G–R
G–R
(*3)
(*3)
(*4)
5 3B
5 3C
15 3A
5 3A
5 3D
5 3E
G–R
G
GR–L
R12
Rheostat
1 T
2 IG
TR
ILL–
ILL–
E
TC
4
3
6
5
8
W–G
W–B
W–G
W–B
G–R
S27
Sub Body ECU
ILEW
23
W–G
A9
ID2
W–G
19
1A
9
1B
9
1A
W–G
W–G
W–B
W–B
W–B
W–B
W–B
W–G
G–R
G–R
I 2
W–B
A
J11
Junction
Connector
IH
* 3 : w/ LEXUS Navigation System
* 4 : w/o LEXUS Navigation System

Service Hints

C14 Combination SW

14–16–Ground : Continuity with the light control SW at TAIL or HEAD position

: Parts Location

Code		See Page	Code		See Page	Code		See Page
A13	A	38	F3		36	J32		43
A14	B	38	F4		36	L1		43
A15	C	38	G4		39	L2		43
A19		38	G5		39	M3		40
A22		38	H11		39	M4		40
A33		38	H13		39	M5		40
B5	C	38	H14		39	P28		40
C4		38	J7	A	40	R1	A	41
C8		38	J8	B	40	R2	B	41
C9	A	38	J11		40	R4		41
C12	D	38	J14		40	R11		41
C13		38	J17		40	R12		41
C14		38	J19		40	R14		44
C16		38	J22		40	R15		44
D5		39	J23		40	R30		41
D19		42	J25		40	S3		41
E4		39	J28		43	S4		41
E8		39	J30		43	S27		45

: Relay Blocks

Code	See Page	Relay Blocks (Relay Block Location)
2	22	Engine Room R/B (Engine Compartment Left)

: Junction Block and Wire Harness Connector

Code	See Page	Junction Block and Wire Harness (Connector Location)
IB	26	Engine Room Main Wire and Driver Side J/B (Lower Finish Panel)
IC		
IF	26	Floor No.2 Wire and Driver Side J/B (Lower Finish Panel)
IG	27	Instrument Panel Wire and Driver Side J/B (Lower Finish Panel)
IJ		
IK		
IL		
1A	30	Instrument Panel Wire and J/B No.1 (Instrument Panel Reinforcement Left)
1B		
2A	32	Instrument Panel Wire and J/B No.2 (Instrument Panel Reinforcement Center)
2B		
2C		
2D		
2E		
3A	34	Instrument Panel Wire and J/B No.3 (Instrument Panel Reinforcement Right)
3B		
3C		
3D		
3E		

: **Connector Joining Wire Harness and Wire Harness**

Code	See Page	Joining Wire Harness and Wire Harness (Connector Location)
ID2	50	Instrument Panel Wire and Floor No.2 Wire (Left Kick Panel)
IH1	52	Instrument Panel Wire and Instrument Panel Wire (Near the J/B No.1)
IJ1	52	Instrument Panel Wire and Instrument Panel No.2 Wire (Instrument Panel Brace LH)
IK1	52	Console Box Wire and Instrument Panel Wire (Under the Instrument Panel Brace LH)
IM1	54	Instrument Panel Wire and Switch Wire (Front Side of the Console Box)
IO1	54	Engine Wire and Instrument Panel Wire (Right Side of the Blower Unit)
IP3	54	Instrument Panel Wire and Engine Room Main Wire (Right Kick Panel)
IQ1	56	Front Door RH Wire and Instrument Panel Wire (Right Kick Panel)
IQ2		
IR3	56	Instrument Panel Wire and Floor Wire (Right Kick Panel)
BH1	60	Back Door No.1 Wire and Floor Wire (Right Quarter Panel Inner)

: **Ground Points**

Code	See Page	Ground Points Location
EA	48	Front Right Fender
EB	48	Front Left Fender
EG	48	Rear Bank of Left Cylinder Head
IH	50	Left Kick Panel
IJ	50	Near the Right Side of Steering Column
IL	50	Right Kick Panel
BP	58	Left Quarter Panel Inner
BQ	58	Back Door Panel Center
BR	58	Right Quarter Panel Inner

: **Splice Points**

Code	See Page	Wire Harness with Splice Points	Code	See Page	Wire Harness with Splice Points
I2	52	Instrument Panel Wire	I11	52	Switch Wire
I4			B5	60	Back Door No.1 Wire
I5			B6		
I8					

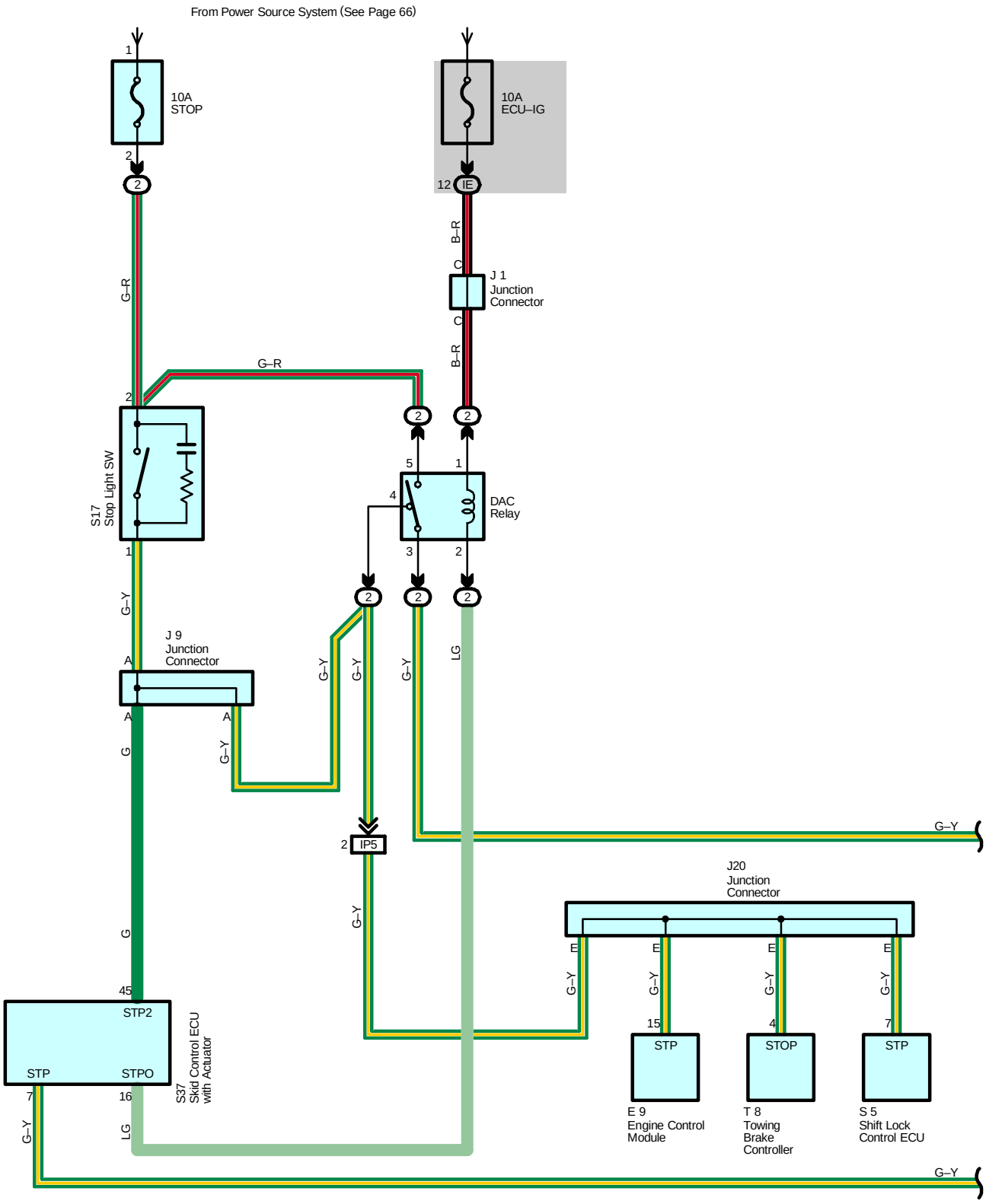
From Power Source System (See Page 66)
10A
STOP
10A
ECU–IG
IE
B–R
J 1
Junction
Connector
G–R
S17
Stop Light SW
DAC
Relay
G–Y
J 9
Junction
Connector
LG
IP5
J20
Junction
Connector
STP2
STP
STPO
S37
Skid Control ECU
with Actuator
STOP
E 9
Engine Control
Module
T 8
Towing
Brake
Controller
S 5
Shift Lock
Control ECU

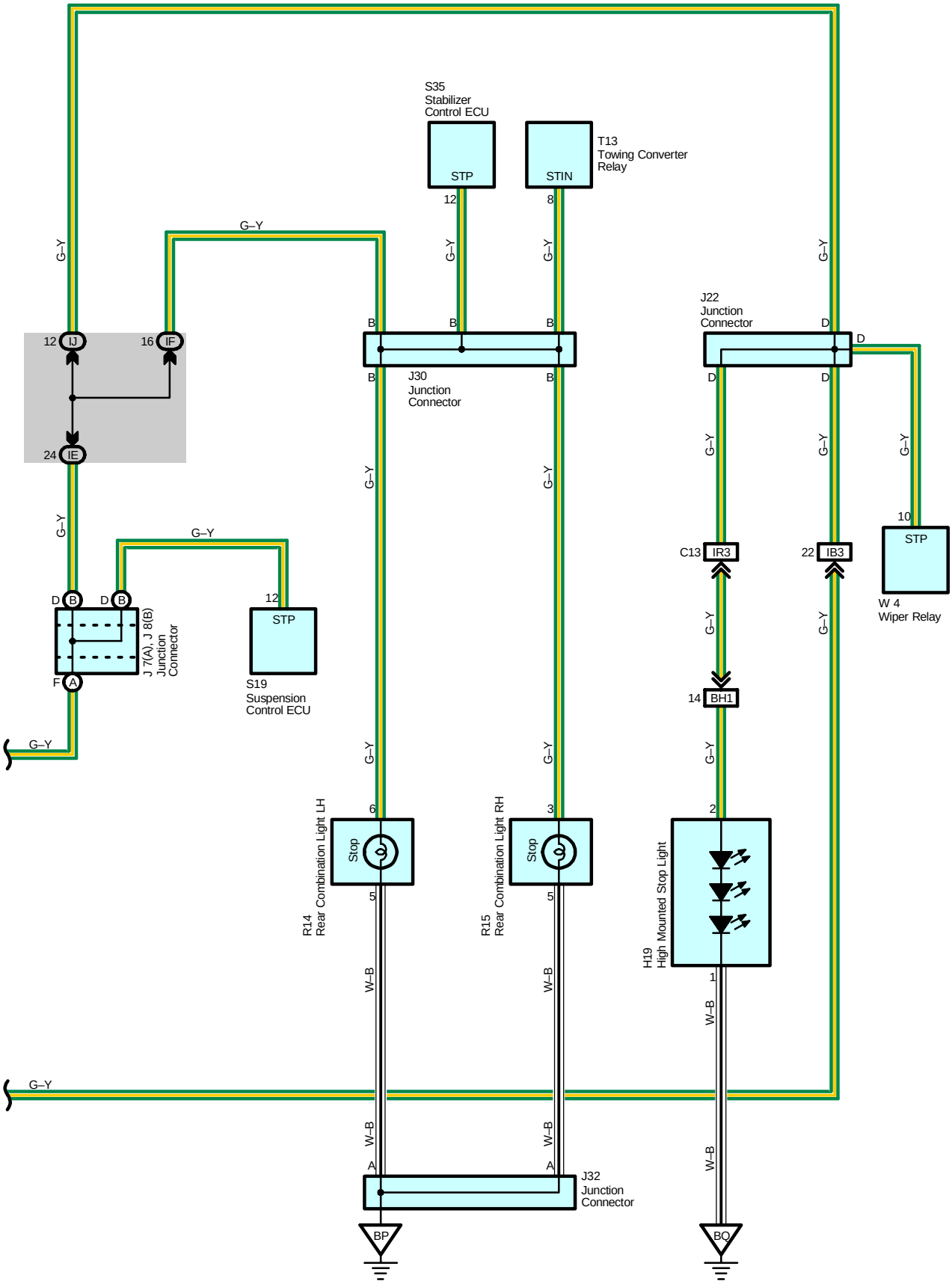
S35
Stabilizer
Control ECU
STP
STIN
T13
Towing Converter
Relay
12
8
G–Y
12 IJ
16 IF
24 IE
B
J30
Junction
Connector
J22
Junction
Connector
D
C13 IR3
22 IB3
10
STP
W 4
Wiper Relay
14 BH1
D B
F A
J 7(A), J 8(B)
Junction
Connector
S19
Suspension
Control ECU
R14
Rear Combination Light LH
R15
Rear Combination Light RH
Stop
6
5
3
2
1
H19
High Mounted Stop Light
W–B
A
J32
Junction
Connector
BP
BQ

Stop Light

Service Hints

S17 Stop Light SW

2–1 : Closed with the brake pedal depressed

: Parts Location

Code		See Page	Code	See Page	Code	See Page
E9		39	J22	40	S19	41
H19		43	J30	43	S35	45
J1		37	J32	43	S37	37
J7	A	40	R14	44	T8	41
J8	B	40	R15	44	T13	45
J9		40	S5	41	W4	41
J20		40	S17	41		

: Relay Blocks

Code	See Page	Relay Blocks (Relay Block Location)
2	22	Engine Room R/B (Engine Compartment Left)

: Junction Block and Wire Harness Connector

Code	See Page	Junction Block and Wire Harness (Connector Location)
IE	26	Engine Room Main Wire and Driver Side J/B (Lower Finish Panel)
IF	26	Floor No.2 Wire and Driver Side J/B (Lower Finish Panel)
IJ	27	Instrument Panel Wire and Driver Side J/B (Lower Finish Panel)

: Connector Joining Wire Harness and Wire Harness

Code	See Page	Joining Wire Harness and Wire Harness (Connector Location)
IB3	50	Instrument Panel Wire and Engine Room Main Wire (Left Kick Panel)
IP5	54	Instrument Panel Wire and Engine Room Main Wire (Right Kick Panel)
IR3	56	Instrument Panel Wire and Floor Wire (Right Kick Panel)
BH1	60	Back Door No.1 Wire and Floor Wire (Right Quarter Panel Inner)

: Ground Points

Code	See Page	Ground Points Location
BP	58	Left Quarter Panel Inner
BQ	58	Back Door Panel Center

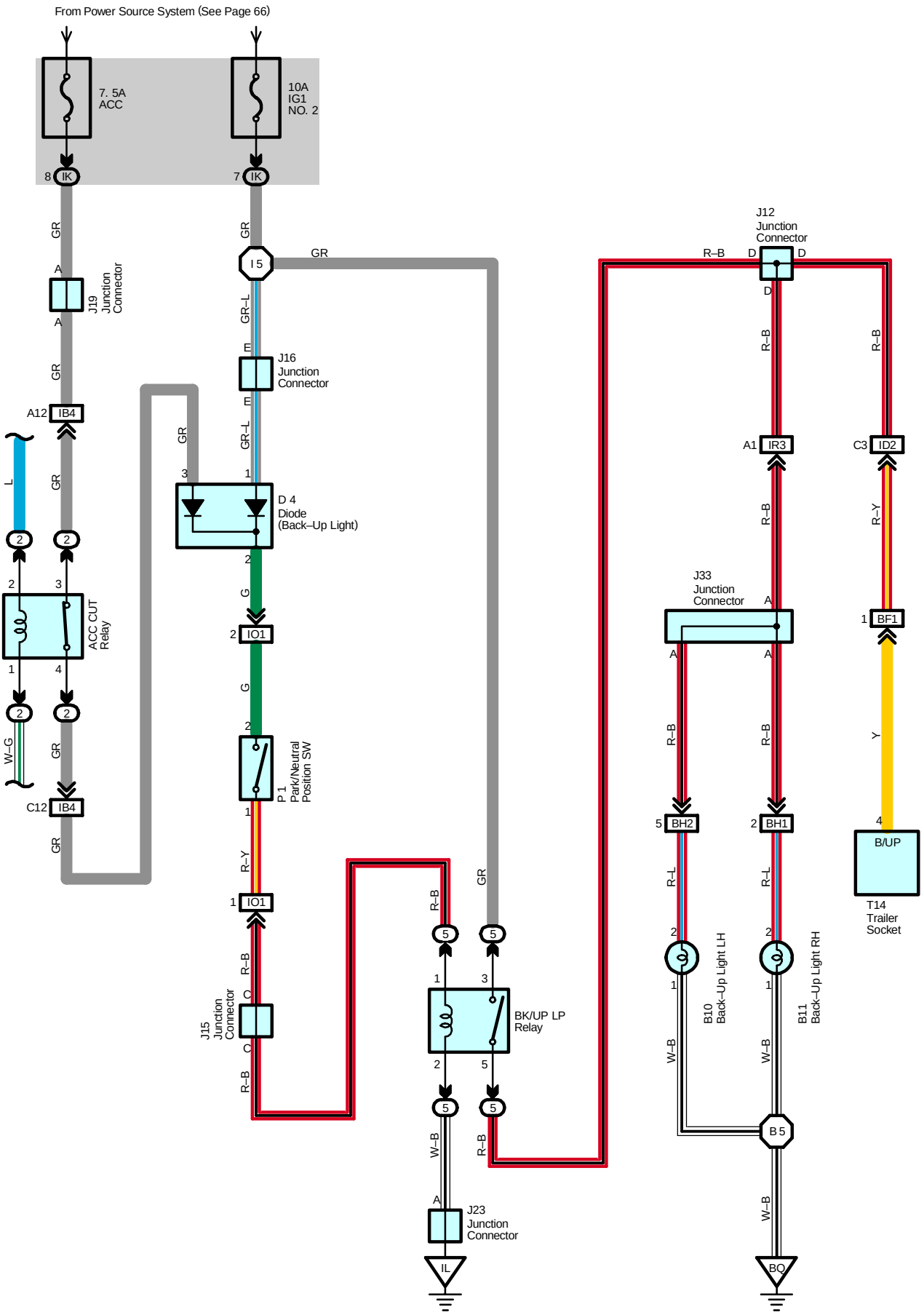
From Power Source System (See Page 66)
7. 5A
ACC
10A
IG1
NO. 2
8 IK
7 IK
GR
A
J19
Junction
Connector
A
GR
A12 IB4
L
GR
2
2
2
3
ACC CUT
Relay
1
4
2
2
W–G
GR
C12 IB4
GR
GR
I 5
GR
GR–L
E
J16
Junction
Connector
E
GR–L
GR
3
1
D 4
Diode
(Back–Up Light)
2
G
2 IO1
G
2
P 1
Park/Neutral
Position SW
1
R–Y
1 IO1
R–B
C
J15
Junction
Connector
C
R–B
R–B
5
5
GR
1
3
BK/UP LP
Relay
2
5
5
5
W–B
R–B
A
J23
Junction
Connector
IL
J12
Junction
Connector
R–B
D
D
D
R–B
R–B
A1 IR3
C3 ID2
R–B
R–Y
J33
Junction
Connector
A
A
A
1 BF1
R–B
R–B
Y
5 BH2
2 BH1
4
B/UP
R–L
R–L
2
2
1
1
B10
Back–Up Light LH
B11
Back–Up Light RH
T14
Trailer
Socket
W–B
W–B
B 5
W–B
BQ

Service Hints

P1 Park/Neutral Position SW

1–2 : Continuity with the shift lever in R position

: Parts Location

Code	See Page	Code	See Page	Code	See Page
B10	42	J15	40	J33	43
B11	42	J16	40	P1	37
D4	39	J19	40	T14	45
J12	40	J23	40		

: Relay Blocks

Code	See Page	Relay Blocks (Relay Block Location)
2	22	Engine Room R/B (Engine Compartment Left)
5	24	Passenger Side R/B (Right Kick Panel)

: Junction Block and Wire Harness Connector

Code	See Page	Junction Block and Wire Harness (Connector Location)
IK	27	Instrument Panel Wire and Driver Side J/B (Lower Finish Panel)

: Connector Joining Wire Harness and Wire Harness

Code	See Page	Joining Wire Harness and Wire Harness (Connector Location)
IB4	50	Instrument Panel Wire and Engine Room Main Wire (Left Kick Panel)
ID2	50	Instrument Panel Wire and Floor No.2 Wire (Left Kick Panel)
IO1	54	Engine Wire and Instrument Panel Wire (Right Side of the Blower Unit)
IR3	56	Instrument Panel Wire and Floor Wire (Right Kick Panel)
BF1	60	Floor No.2 Wire and Frame No.3 Wire (Left Side of Rear Floor Cross Member)
BH1	60	Back Door No.1 Wire and Floor Wire (Right Quarter Panel Inner)
BH2		

: Ground Points

Code	See Page	Ground Points Location
IL	50	Right Kick Panel
BQ	58	Back Door Panel Center

: Splice Points

Code	See Page	Wire Harness with Splice Points	Code	See Page	Wire Harness with Splice Points
I5	52	Instrument Panel Wire	B5	60	Back Door No.1 Wire

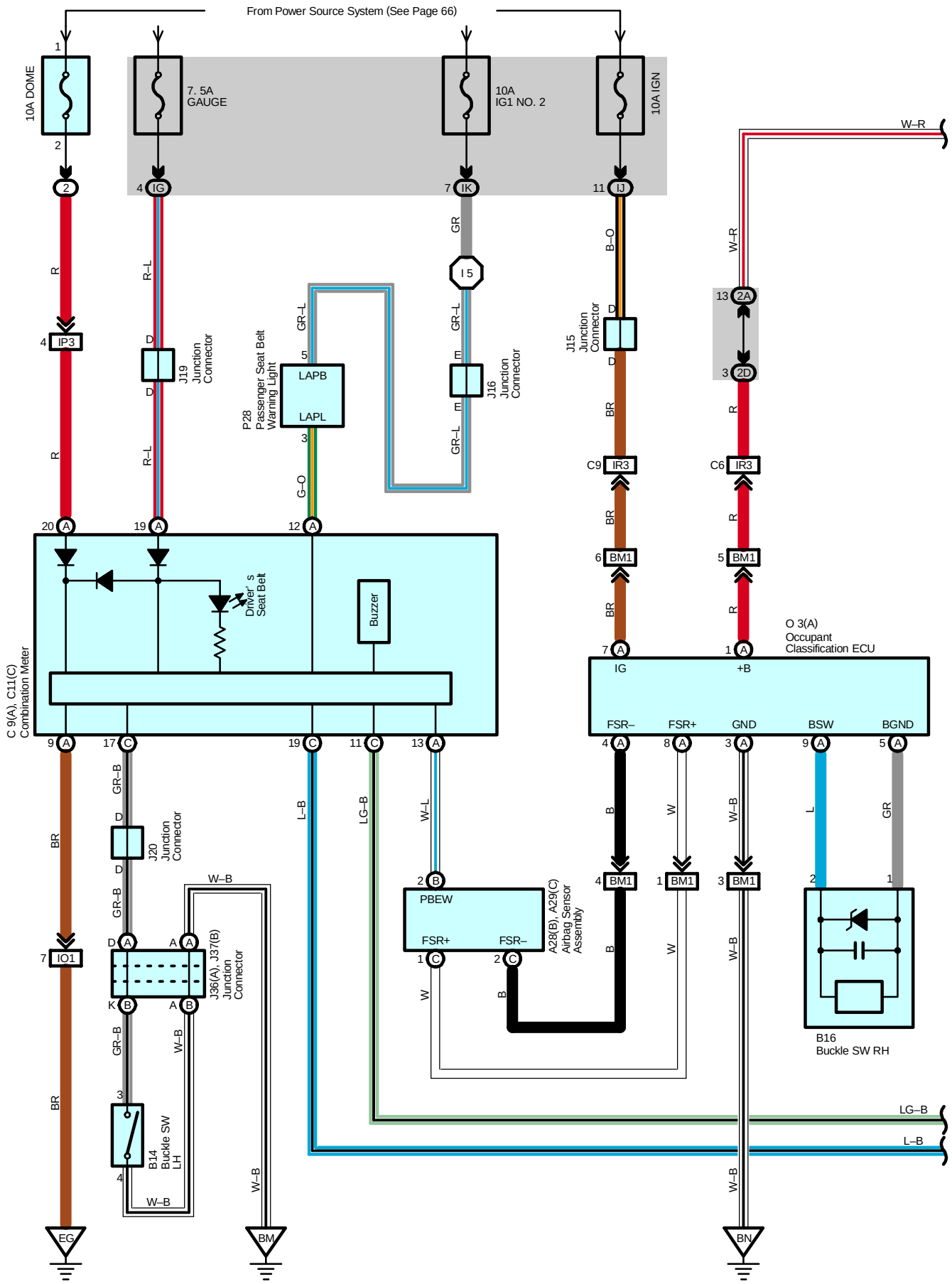
From Power Source System (See Page 66)
10A DOME
7. 5A GAUGE
10A IG1 NO. 2
10A IGN
IP3
J19 Junction Connector
P28 Passenger Seat Belt Warning Light
LAPB
LAPL
I5
J16 Junction Connector
J15 Junction Connector
IR3
BM1
2A
2D
C 9(A), C11(C) Combination Meter
Driver's Seat Belt
Buzzer
O 3(A) Occupant Classification ECU
IG
+B
FSR–
FSR+
GND
BSW
BGND
J20 Junction Connector
IO1
J36(A), J37(B) Junction Connector
B14 Buckle SW LH
PBEW
A28(B), A29(C) Airbag Sensor Assembly
B16 Buckle SW RH
EG
BM
BN

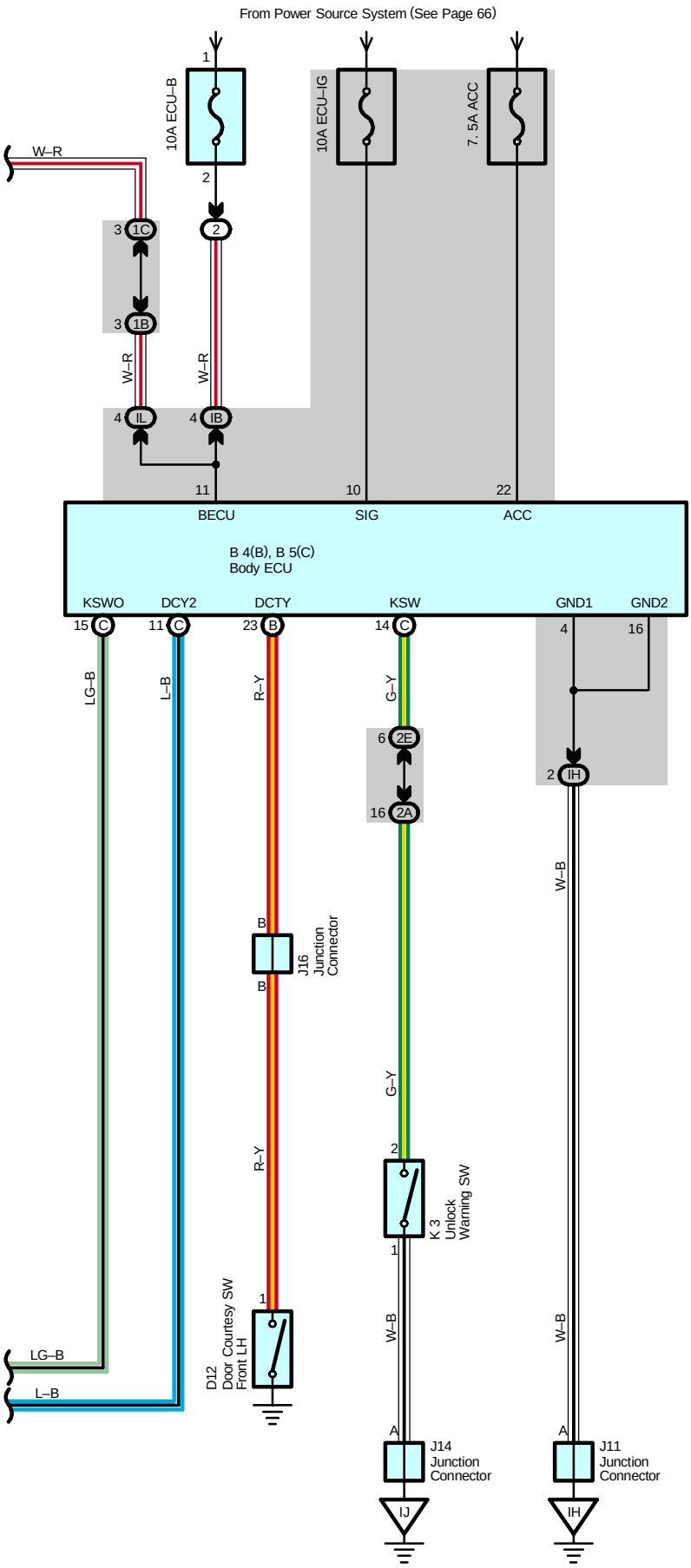
From Power Source System (See Page 66)
10A ECU–B
10A ECU–IG
7. 5A ACC
W–R
1C
1B
2
IL
IB
BECU
SIG
ACC
B 4(B), B 5(C)
Body ECU
KSWO
DCY2
DCTY
KSW
GND1
GND2
2E
2A
IH
LG–B
L–B
R–Y
G–Y
W–B
J16
Junction
Connector
K 3
Unlock
Warning SW
D12
Door Courtesy SW
Front LH
J14
Junction
Connector
J11
Junction
Connector
IJ
IH

Key Reminder and Seat Belt Warning

System Outline

1. Key Reminder System

With the ignition key inserted in the key cylinder (Unlock warning SW on), the ignition SW still off and driver's door open (Door courtesy SW on), when a signal is input to TERMINAL (B) 23 of the body ECU, the body ECU operates, current flows from TERMINAL (C) 15 of the ECU to TERMINAL (C) 11 of the combination meter to GROUND and key reminder buzzer sounds.

2. Seat Belt Warning System

When the driver has not fastened the seat belt while the ignition SW is ON, the driver seat belt warning light blinks, and a warning buzzer comes on.
Also, in the front passenger seat, a sensor recognizes passenger, and when the passenger has not fastened the seat belt, the front passenger seat belt warning light blinks.

Service Hints

Body ECU

22–Ground : Approx. 12 volts with the ignition SW at ACC or ON position
10–Ground : Approx. 12 volts with the ignition SW at ON position
4, 16–Ground : Always continuity
11–Ground : Always approx. 12 volts

D12 Door Courtesy SW Front LH

1–Ground : Continuity with the driver door open

K3 Unlock Warning SW

1–2 : Continuity with the ignition key in cylinder

B14 Buckle SW LH

3–4 : Continuity with the driver's seat belt in use

: Parts Location

Code		See Page	Code		See Page	Code		See Page
A28	B	38	C11	C	38	J20		40
A29	C	38	D12		42	J36	A	46
B4	B	38	J11		40	J37	B	46
B5	C	38	J14		40	K3		40
B14		46	J15		40	O3	A	46
B16		46	J16		40	P28		40
C9	A	38	J19		40			

: Relay Blocks

Code	See Page	Relay Blocks (Relay Block Location)
2	22	Engine Room R/B (Engine Compartment Left)

: Junction Block and Wire Harness Connector

Code	See Page	Junction Block and Wire Harness (Connector Location)
IB	26	Engine Room Main Wire and Driver Side J/B (Lower Finish Panel)
IG	27	Instrument Panel Wire and Driver Side J/B (Lower Finish Panel)
IH		
IJ		
IK		
IL		
1B	30	Instrument Panel Wire and J/B No.1 (Instrument Panel Reinforcement Left)
1C		
2A	32	Instrument Panel Wire and J/B No.2 (Instrument Panel Reinforcement Center)
2D		
2E		

: **Connector Joining Wire Harness and Wire Harness**

Code	See Page	Joining Wire Harness and Wire Harness (Connector Location)
IO1	54	Engine Wire and Instrument Panel Wire (Right Side of the Blower Unit)
IP3	54	Instrument Panel Wire and Engine Room Main Wire (Right Kick Panel)
IR3	56	Instrument Panel Wire and Floor Wire (Right Kick Panel)
BM1	62	Floor Wire and Front Seat RH Wire (Under the Front Passenger's Seat)

: **Ground Points**

Code	See Page	Ground Points Location
EG	48	Rear Bank of Left Cylinder Head
IH	50	Left Kick Panel
IJ	50	Near the Right Side of Steering Column
BM	58	Under the Driver's Seat
BN	58	Under the Front Passenger's Seat

: **Splice Points**

Code	See Page	Wire Harness with Splice Points	Code	See Page	Wire Harness with Splice Points
I5	52	Instrument Panel Wire			

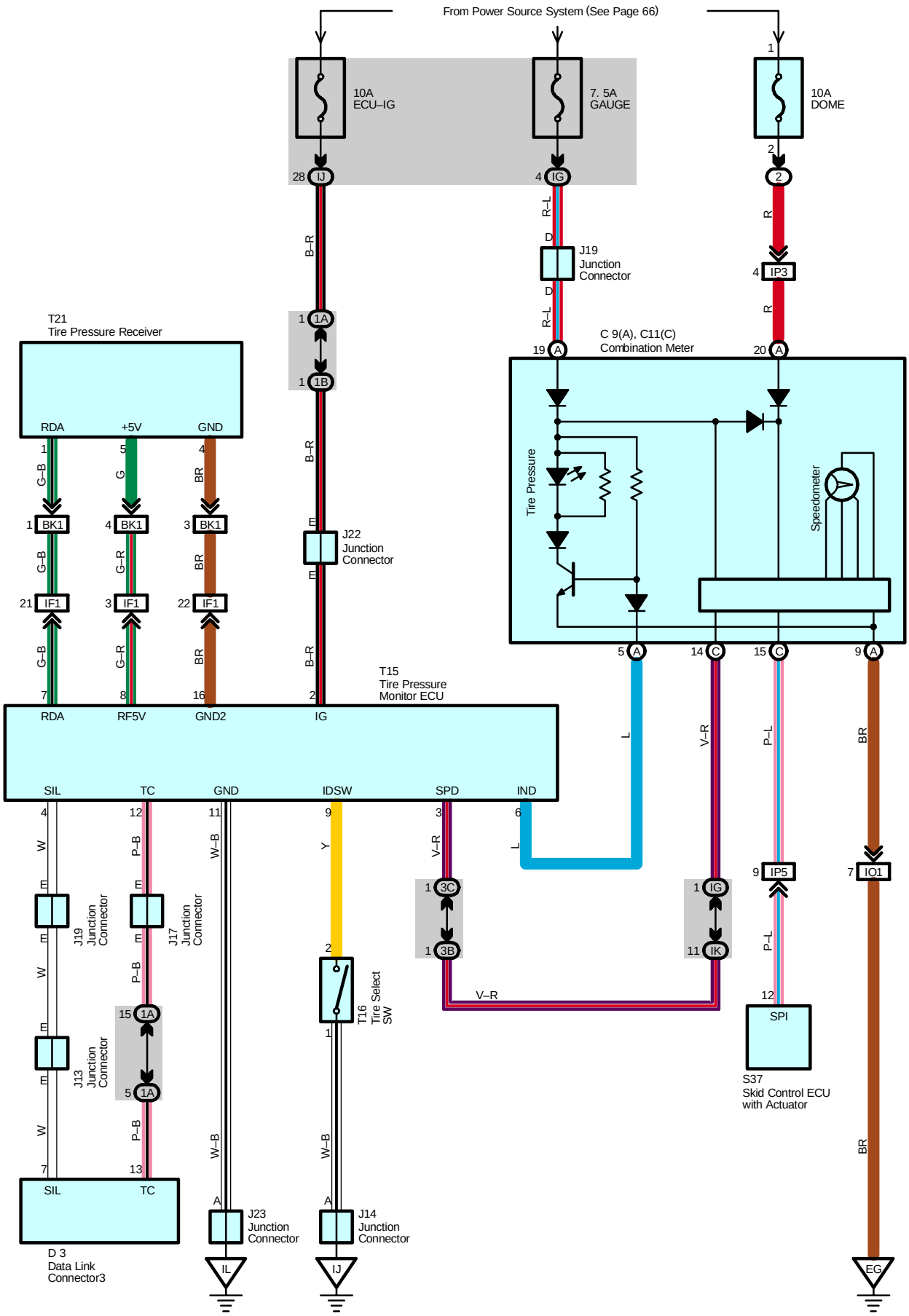
From Power Source System (See Page 66)
10A
ECU–IG
7. 5A
GAUGE
10A
DOME
J19
Junction
Connector
C 9(A), C11(C)
Combination Meter
Tire Pressure
Speedometer
T21
Tire Pressure Receiver
RDA
+5V
GND
J22
Junction
Connector
T15
Tire Pressure
Monitor ECU
RDA
RF5V
GND2
IG
SIL
TC
GND
IDSW
SPD
IND
J19
Junction
Connector
J17
Junction
Connector
J13
Junction
Connector
T16
Tire Select
SW
SPI
S37
Skid Control ECU
with Actuator
D 3
Data Link
Connector3
J23
Junction
Connector
J14
Junction
Connector

System Outline

The air pressure sensor installed in the tire wheel detects the tire air pressure and transmits signals to the vehicle side receiver. When the detected tire air pressure is below a specified level, the warning light in the combination meter comes on to inform the driver.

Warnings when the tire pressure is low
∗ When the tire air pressure is below a specified level, the warning light in the combination meter comes on.

Service Hints

T15 Tire Pressure Monitor ECU

2–Ground : Approx. 12 volts with the ignition SW at ON or ACC position
11–Ground : Always continuity

: Parts Location

Code		See Page	Code	See Page	Code	See Page
C9	A	38	J17	40	T15	41
C11	C	38	J19	40	T16	41
D3		39	J22	40	T21	45
J13		40	J23	40		
J14		40	S37	37		

: Relay Blocks

Code	See Page	Relay Blocks (Relay Block Location)
2	22	Engine Room R/B (Engine Compartment Left)

: Junction Block and Wire Harness Connector

Code	See Page	Junction Block and Wire Harness (Connector Location)
IG	27	Instrument Panel Wire and Driver Side J/B (Lower Finish Panel)
IJ		
IK		
1A	30	Instrument Panel Wire and J/B No.1 (Instrument Panel Reinforcement Left)
1B		
3B	34	Instrument Panel Wire and J/B No.3 (Instrument Panel Reinforcement Right)
3C		

: Connector Joining Wire Harness and Wire Harness

Code	See Page	Joining Wire Harness and Wire Harness (Connector Location)
IF1	52	Roof Wire and Instrument Panel Wire (Upper the Driver Side J/B)
IO1	54	Engine Wire and Instrument Panel Wire (Right Side of the Blower Unit)
IP3	54	Instrument Panel Wire and Engine Room Main Wire (Right Kick Panel)
IP5		
BK1	60	Roof Wire and Tire Pressure Monitor Wire (Front Side of Roof)

: Ground Points

Code	See Page	Ground Points Location
EG	48	Rear Bank of Left Cylinder Head
IJ	50	Near the Right Side of Steering Column
IL	50	Right Kick Panel

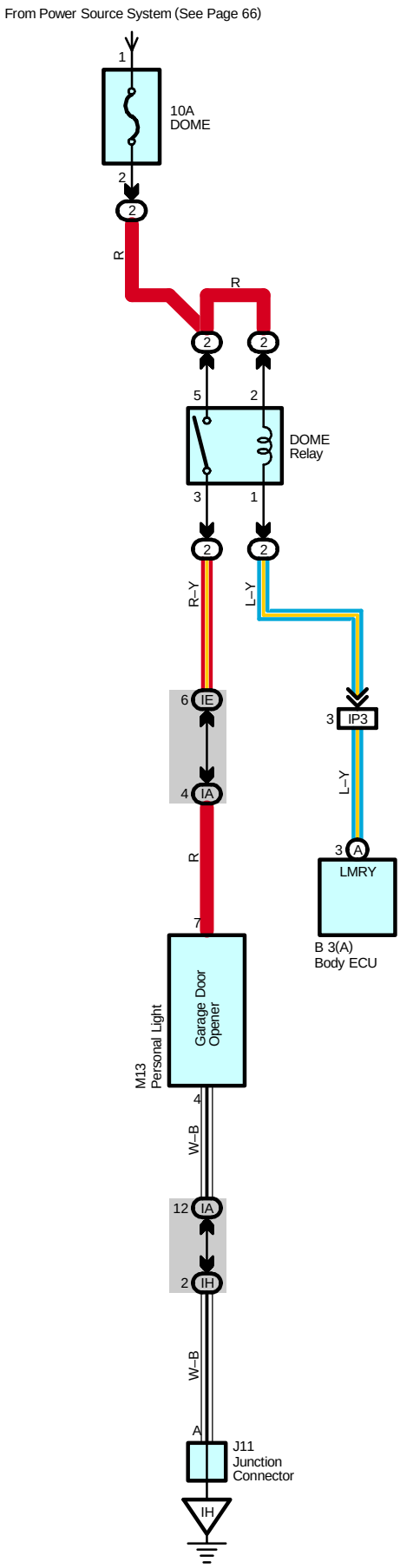
From Power Source System (See Page 66)
1
10A
DOME
2
2
R
R
2
2
5
2
DOME
Relay
3
1
2
2
R–Y
L–Y
6
IE
3
IP3
4
IA
L–Y
3
A
R
LMRY
7
B 3(A)
Body ECU
M13
Personal Light
Garage Door
Opener
4
W–B
12
IA
2
IH
W–B
A
J11
Junction
Connector
IH

Service Hints

M13 Personal Light

4–Ground : Always continuity

: Parts Location

Code		See Page	Code	See Page	Code	See Page
B3	A	38	J11	40	M13	44

: Relay Blocks

Code	See Page	Relay Blocks (Relay Block Location)
2	22	Engine Room R/B (Engine Compartment Left)

: Junction Block and Wire Harness Connector

Code	See Page	Junction Block and Wire Harness (Connector Location)
IA	26	Roof Wire and Driver Side J/B (Lower Finish Panel)
IE	26	Engine Room Main Wire and Driver Side J/B (Lower Finish Panel)
IH	27	Instrument Panel Wire and Driver Side J/B (Lower Finish Panel)

: Connector Joining Wire Harness and Wire Harness

Code	See Page	Joining Wire Harness and Wire Harness (Connector Location)
IP3	54	Instrument Panel Wire and Engine Room Main Wire (Right Kick Panel)

: Ground Points

Code	See Page	Ground Points Location
IH	50	Left Kick Panel

Front Wiper with Rain Sensor and Washer

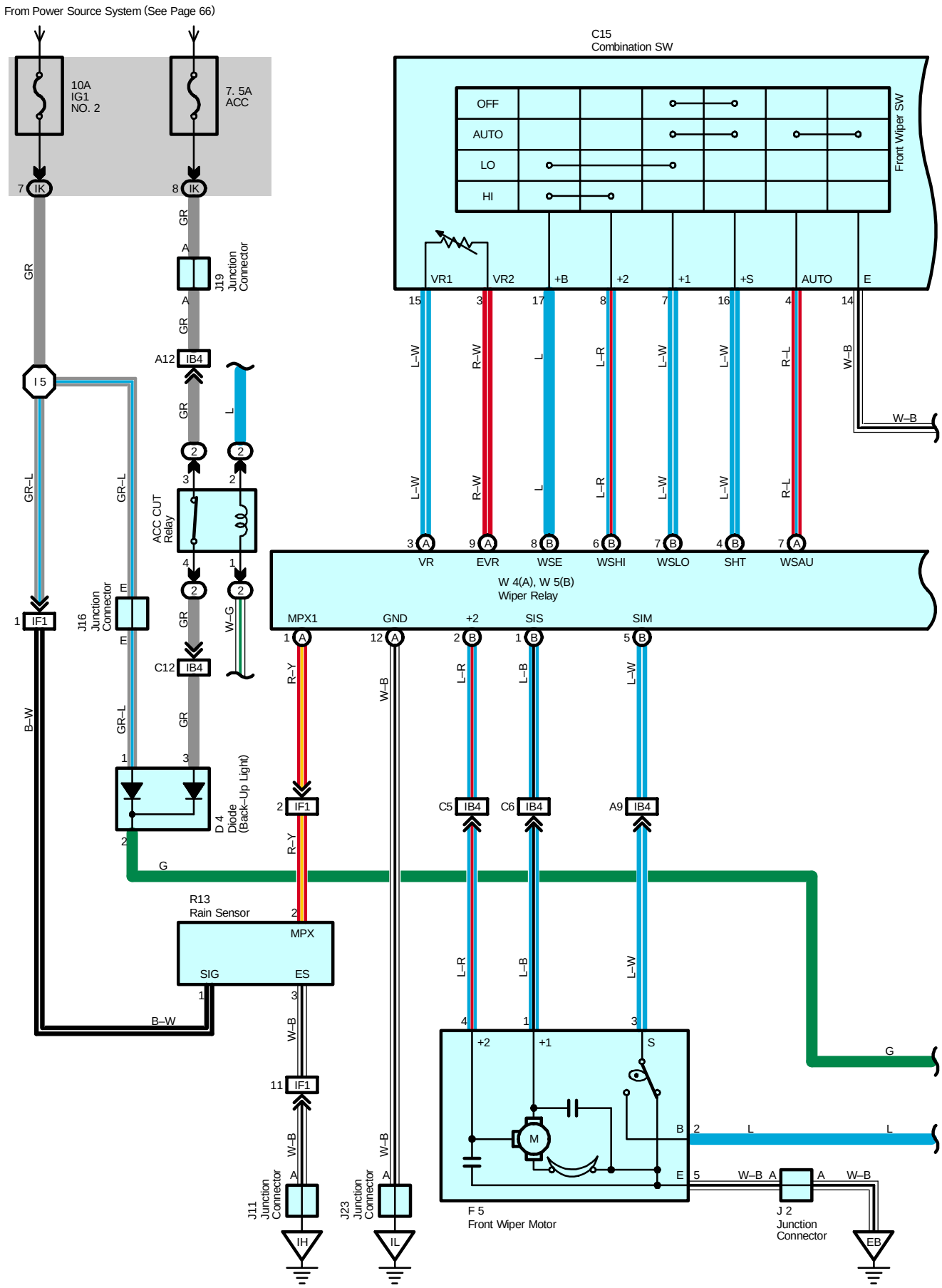

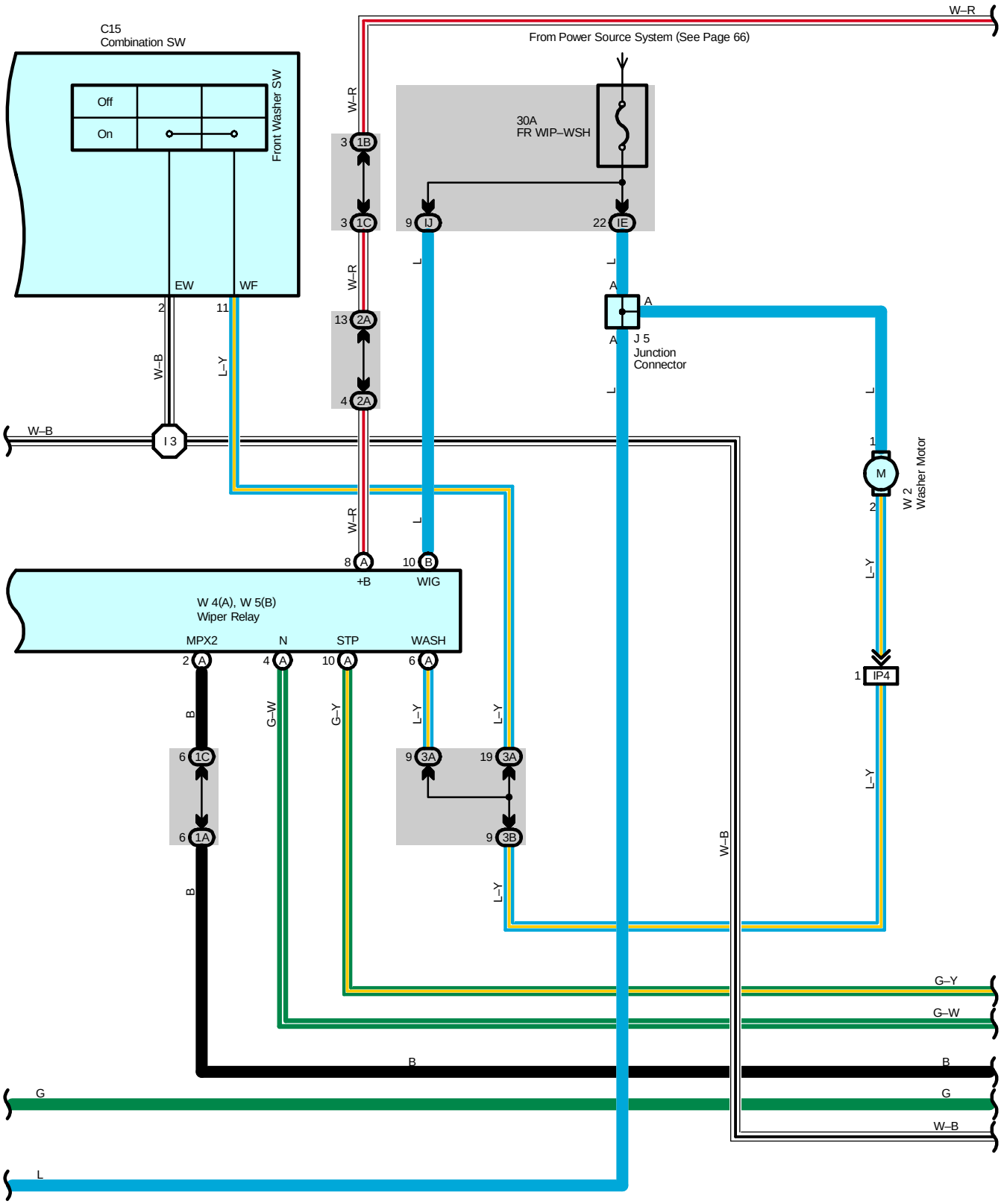
C15
Combination SW
Off
On
Front Washer SW
EW
WF
From Power Source System (See Page 66)
30A
FR WIP–WSH
J 5
Junction
Connector
W 2
Washer Motor
W 4(A), W 5(B)
Wiper Relay
MPX2
N
STP
WASH
+B
WIG
IP4
I 3
W–R
W–B
L–Y
G–W
G–Y
B
G
L

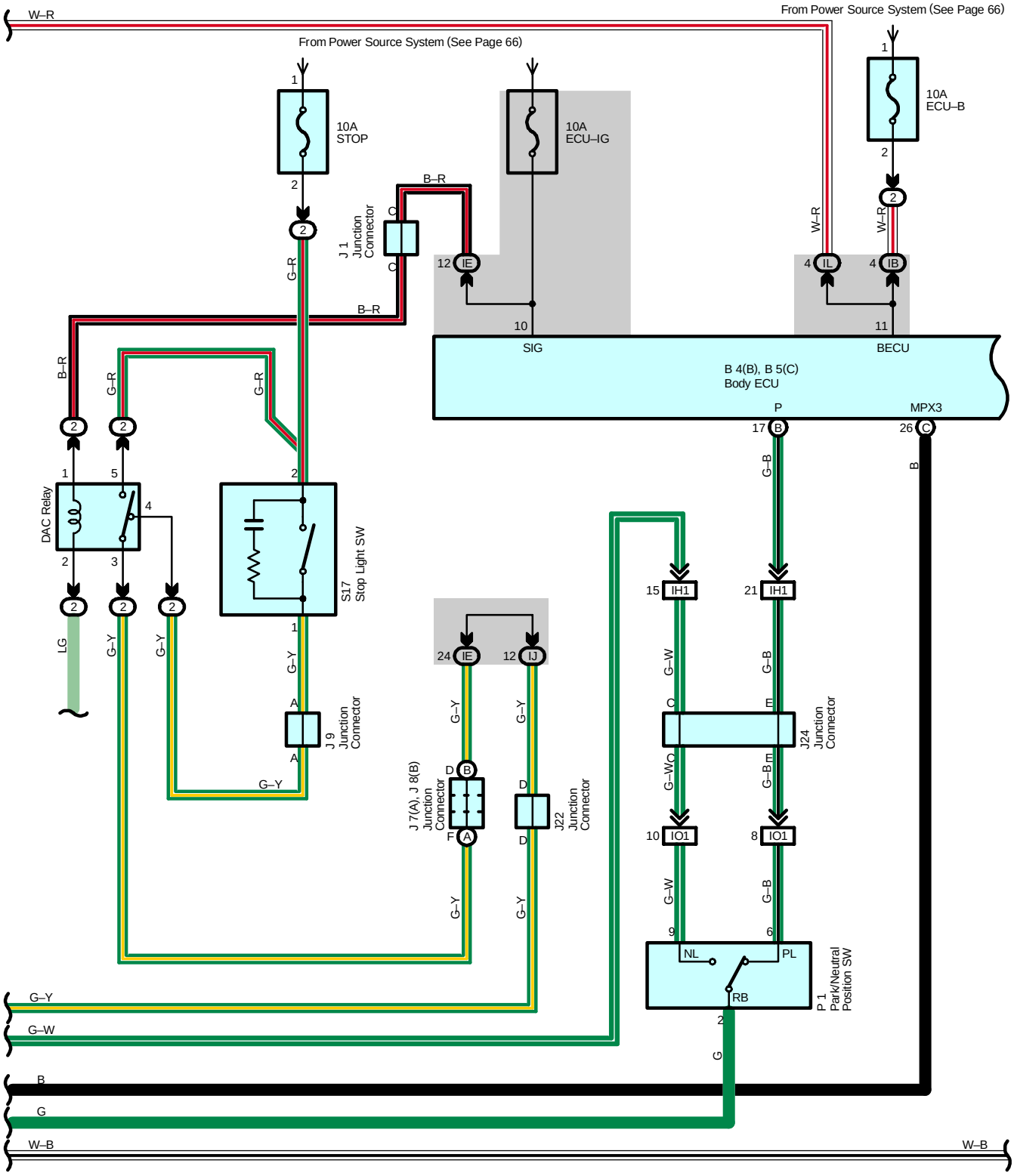
W–R
From Power Source System (See Page 66)
From Power Source System (See Page 66)
10A
STOP
10A
ECU–IG
10A
ECU–B
B–R
J 1
Junction
Connector
G–R
W–R
W–R
12 IE
4 IL
4 IB
10
SIG
11
BECU
B 4(B), B 5(C)
Body ECU
P
MPX3
17 B
26 C
G–B
B
B–R
G–R
G–R
DAC Relay
S17
Stop Light SW
LG
G–Y
G–Y
G–Y
A
J 9
Junction
Connector
G–Y
24 IE
12 IJ
G–Y
G–Y
J 7(A), J 8(B)
Junction
Connector
J22
Junction
Connector
15 IH1
21 IH1
G–W
G–B
J24
Junction
Connector
G–W
G–B
10 IO1
8 IO1
G–W
G–B
NL
PL
RB
P 1
Park/Neutral
Position SW
G–Y
G–W
G
B
G
W–B
W–B

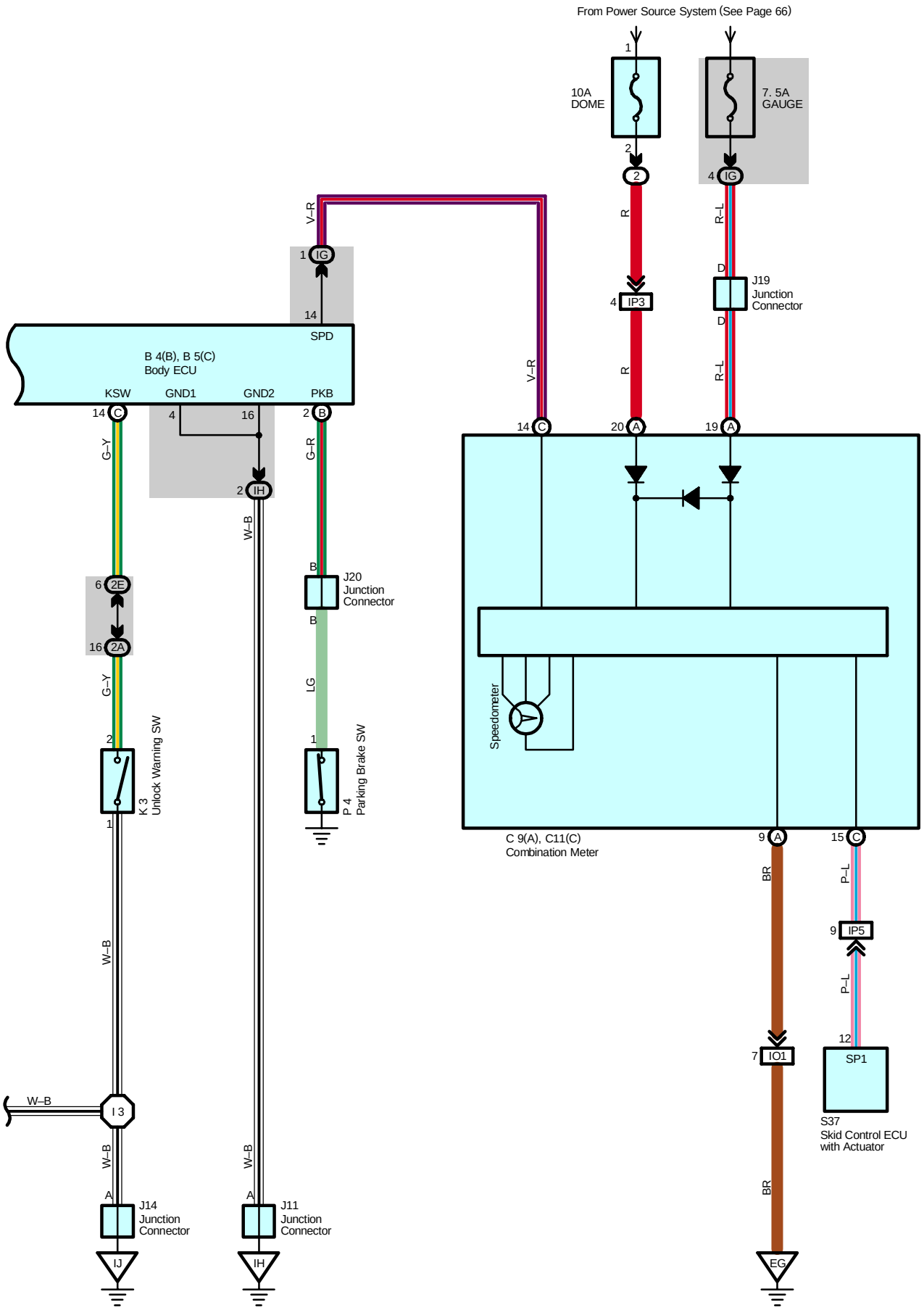
From Power Source System (See Page 66)
10A
DOME
7. 5A
GAUGE
IG
IP3
J19
Junction
Connector
V–R
R
R–L
B 4(B), B 5(C)
Body ECU
KSW
GND1
GND2
PKB
SPD
G–Y
G–R
W–B
2E
2A
IH
J20
Junction
Connector
LG
K 3
Unlock Warning SW
P 4
Parking Brake SW
Speedometer
C 9(A), C11(C)
Combination Meter
BR
P–L
IP5
IO1
SP1
S37
Skid Control ECU
with Actuator
I 3
J14
Junction
Connector
J11
Junction
Connector
IJ
EG

Front Wiper with Rain Sensor and Washer

System Outline

Auto Wiper Operation

When the front wiper SW is placed to AUTO position, the rain sensor detects the amount of rain of the front windshield, and a signal is output to the wiper relay. The wiper relay automatically controls the intermittent time and operates the wiper, in accordance with the signal.

Service Hints

W4 (A), W5 (B) Wiper Relay

(B)10–Ground : Approx. 12 volts with the ignition SW at ON or ST position
(A) 8–Ground : Always approx. 12 volts
(A)12–Ground : Always continuity

F5 Front Wiper Motor

2–Ground : Approx. 12 volts with the ignition SW at ON or ST position
5–Ground : Always continuity

: Parts Location

Code		See Page	Code		See Page	Code		See Page
B4	B	38	J7	A	40	J24		40
B5	C	38	J8	B	40	K3		40
C9	A	38	J9		40	P1		37
C11	C	38	J11		40	P4		40
C15		38	J14		40	R13		44
D4		39	J16		40	S17		41
F5		36	J19		40	S37		37
J1		37	J20		40	W2		37
J2		37	J22		40	W4	A	41
J5		37	J23		40	W5	B	41

: Relay Blocks

Code	See Page	Relay Blocks (Relay Block Location)
2	22	Engine Room R/B (Engine Compartment Left)

: Junction Block and Wire Harness Connector

Code	See Page	Junction Block and Wire Harness (Connector Location)
IB	26	Engine Room Main Wire and Driver Side J/B (Lower Finish Panel)
IE		
IG	27	Instrument Panel Wire and Driver Side J/B (Lower Finish Panel)
IH		
IJ		
IK		
IL		
1A	30	Instrument Panel Wire and J/B No.1 (Instrument Panel Reinforcement Left)
1B		
1C		
2A	32	Instrument Panel Wire and J/B No.2 (Instrument Panel Reinforcement Center)
2E		
3A	34	Instrument Panel Wire and J/B No.3 (Instrument Panel Reinforcement Right)
3B		

: **Connector Joining Wire Harness and Wire Harness**

Code	See Page	Joining Wire Harness and Wire Harness (Connector Location)
IB4	50	Instrument Panel Wire and Engine Room Main Wire (Left Kick Panel)
IF1	52	Roof Wire and Instrument Panel Wire (Upper the Driver Side J/B)
IH1	52	Instrument Panel Wire and Instrument Panel Wire (Near the J/B No.1)
IO1	54	Engine Wire and Instrument Panel Wire (Right Side of the Blower Unit)
IP3	54	Instrument Panel Wire and Engine Room Main Wire (Right Kick Panel)
IP4		
IP5		

: **Ground Points**

Code	See Page	Ground Points Location
EB	48	Front Left Fender
EG	48	Rear Bank of Left Cylinder Head
IH	50	Left Kick Panel
IJ	50	Near the Right Side of Steering Column
IL	50	Right Kick Panel

: **Splice Points**

Code	See Page	Wire Harness with Splice Points	Code	See Page	Wire Harness with Splice Points
I3	52	Instrument Panel Wire	I5	52	Instrument Panel Wire

Front Wiper without Rain Sensor and Washer

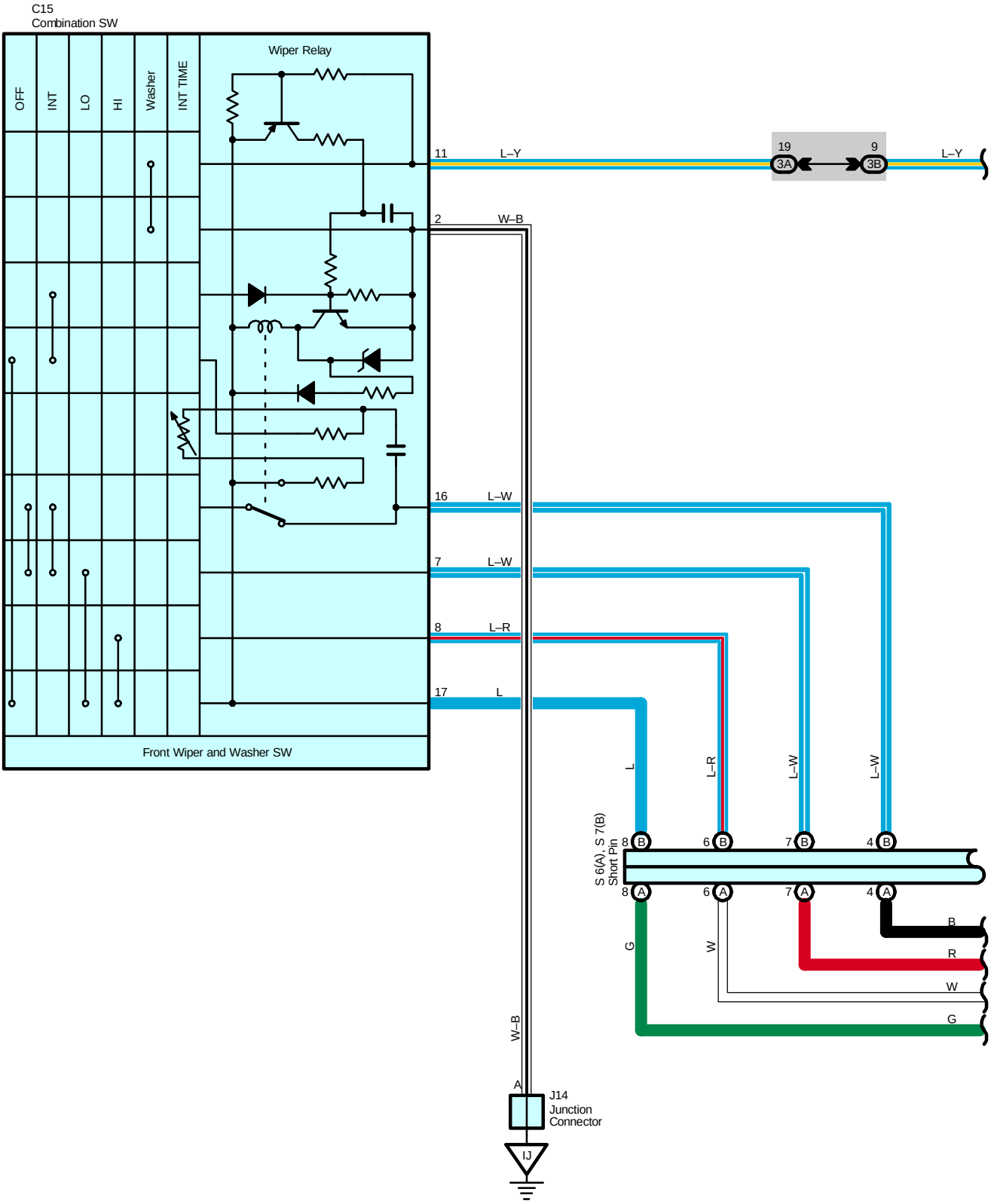

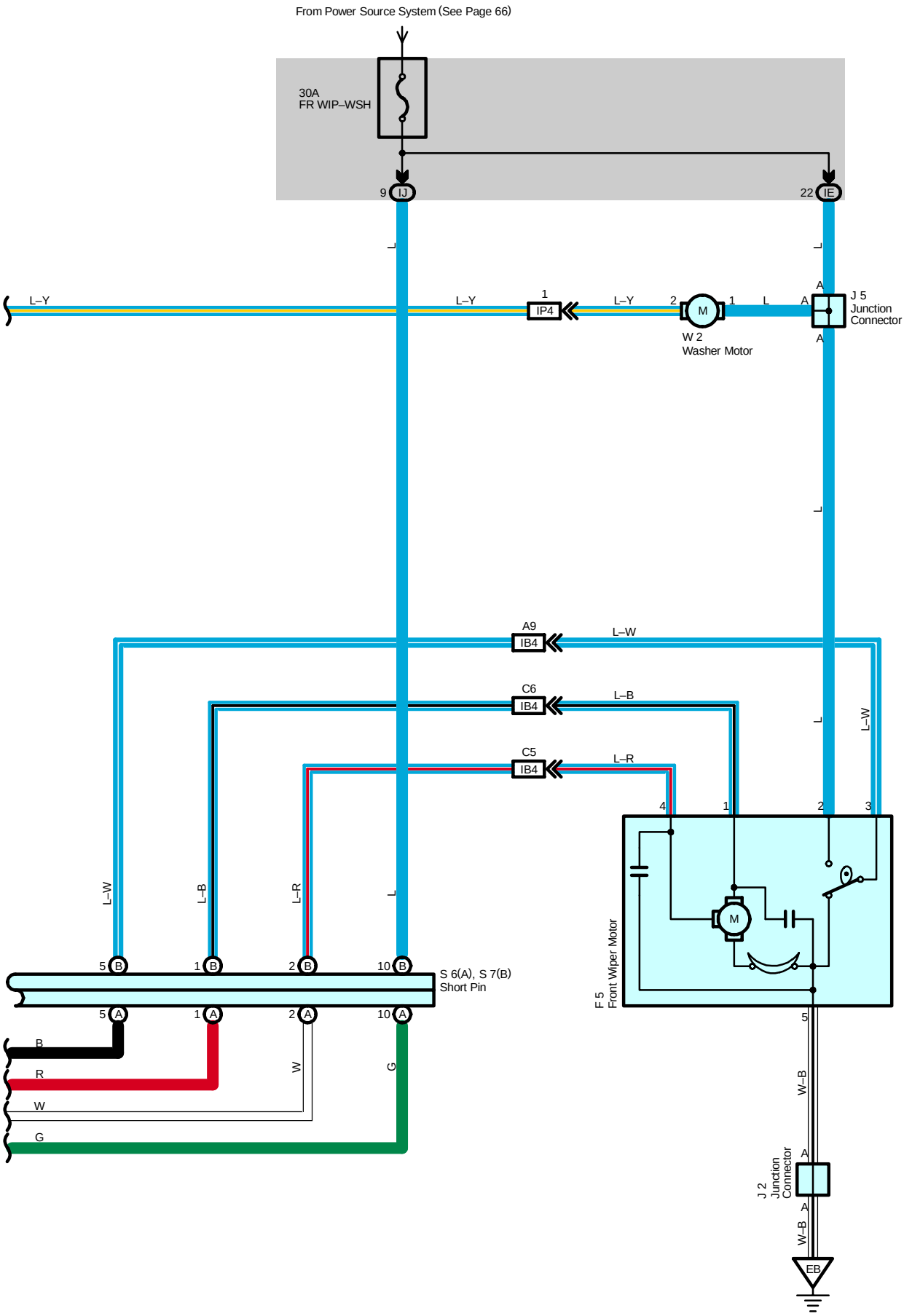
From Power Source System (See Page 66)
30A
FR WIP–WSH
9 IJ
22 IE
L
L–Y
L–Y
1
IP4
L–Y
2
M
1
L
A
A
J 5
Junction
Connector
A
W 2
Washer Motor
L
A9
IB4
L–W
C6
IB4
L–B
C5
IB4
L–R
L
L–W
4
1
2
3
L–W
L–B
L–R
L
M
F 5
Front Wiper Motor
5 B
1 B
2 B
10 B
S 6(A), S 7(B)
Short Pin
5 A
1 A
2 A
10 A
B
R
W
G
W
G
5
W–B
A
J 2
Junction
Connector
A
W–B
EB

Front Wiper without Rain Sensor and Washer

System Outline

With the ignition SW turned on, the current flows to TERMINAL 17 of the front wiper and washer SW, TERMINAL 1 of the washer motor and TERMINAL 2 of the front wiper motor through the FR WIP–WSH fuse.

1. Low Speed Position

With the front wiper and washer SW turned to LO position, the current flows from TERMINAL 17 of the front wiper and washer SW to TERMINAL 7 to TERMINAL 1 of the front wiper motor to TERMINAL 5 to GROUND and causes the front wiper motor to run at low speed.

2. High Speed Position

With the front wiper and washer SW turned to HI position, the current flows from TERMINAL 17 of the front wiper and washer SW to TERMINAL 8 to TERMINAL 4 of the front wiper motor to TERMINAL 5 to GROUND and causes the front wiper motor to run at high speed.

3. INT Position

With the front wiper and washer SW turned to INT position, the wiper relay operates and current flows from TERMINAL 17 of the front wiper and washer SW to TERMINAL 2 to GROUND. This activates the intermittent circuit and the current flows from TERMINAL 17 of the front wiper and washer SW to TERMINAL 7 to TERMINAL 1 of the front wiper motor to TERMINAL 5 to GROUND and the wiper operates. Intermittent operation is controlled by a condenser charge and discharge function in the relay.

4. Washer Interlocking Operation

With the front wiper and washer SW pulled to washer position (Washer SW ON position), the current flows from the FR WIP–WSH fuse to TERMINAL 1 of the washer motor to TERMINAL 2 to TERMINAL 11 of the front wiper and washer SW to TERMINAL 2 to GROUND and causes the washer motor to run and the window washer to spray. Simultaneously, current flows from the FR WIP–WSH fuse to TERMINAL 17 of the front wiper and washer SW to TERMINAL 7 to TERMINAL 1 of the front wiper motor to TERMINAL 5 to GROUND, causing the wiper to function.

Service Hints

C15 Combination SW

2–Ground : Always continuity
17–Ground : Approx. 12 volts with the ignition SW at ON position
7–Ground : Approx. 12 volts with the ignition SW on and the wiper and washer SW at LO position
Approx. 12 volts every approx. 1 to 10 seconds intermittently with the ignition SW on and the wiper and washer SW at INT position
16–Ground : Approx. 12 volts with the ignition SW on and unless the front wiper motor at STOP position
8–Ground : Approx. 12 volts with the ignition SW on and the wiper and washer SW at HI position

F5 Front Wiper Motor

2–3 : Closed unless the front wiper motor at STOP position

: Parts Location

Code	See Page	Code	See Page	Code	See Page
C15	38	J5	37	S7 B	41
F5	36	J14	40	W2	37
J2	37	S6 A	41		

: Junction Block and Wire Harness Connector

Code	See Page	Junction Block and Wire Harness (Connector Location)
IE	26	Engine Room Main Wire and Driver Side J/B (Lower Finish Panel)
IJ	27	Instrument Panel Wire and Driver Side J/B (Lower Finish Panel)
3A	34	Instrument Panel Wire and J/B No.3 (Instrument Panel Reinforcement Right)
3B		

: Connector Joining Wire Harness and Wire Harness

Code	See Page	Joining Wire Harness and Wire Harness (Connector Location)
IB4	50	Instrument Panel Wire and Engine Room Main Wire (Left Kick Panel)
IP4	54	Instrument Panel Wire and Engine Room Main Wire (Right Kick Panel)

▽ : **Ground Points**

Code	See Page	Ground Points Location
EB	48	Front Left Fender
IJ	50	Near the Right Side of Steering Column

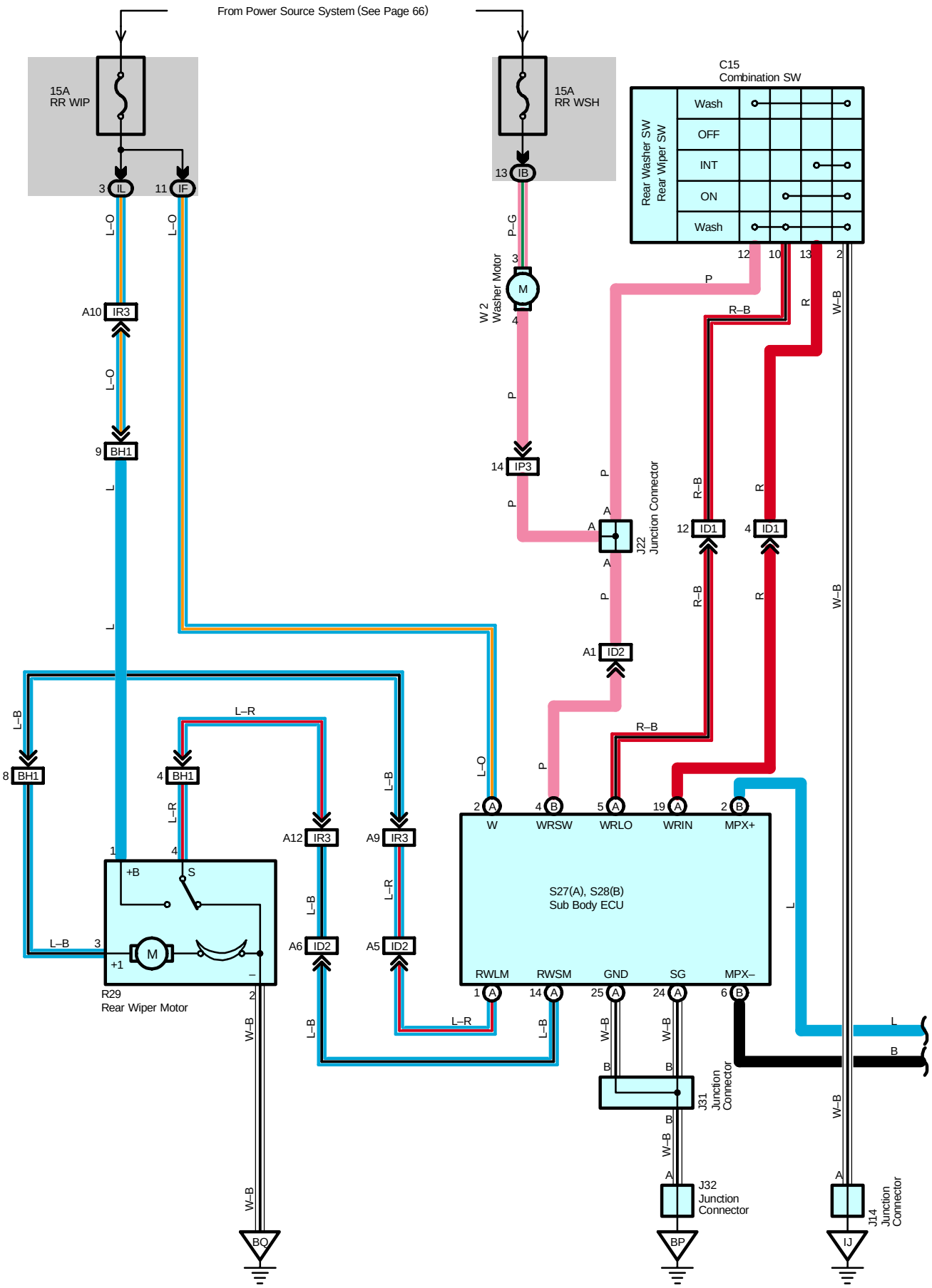
From Power Source System (See Page 66)
15A
RR WIP
15A
RR WSH
C15
Combination SW
Rear Washer SW
Rear Wiper SW
Wash
OFF
INT
ON
Wash
W 2
Washer Motor
J22
Junction Connector
S27(A), S28(B)
Sub Body ECU
W
WRSW
WRLO
WRIN
MPX+
RWLM
RWSM
GND
SG
MPX–
R29
Rear Wiper Motor
J31
Junction
Connector
J32
Junction
Connector
J14
Junction
Connector
BQ
BP
IJ

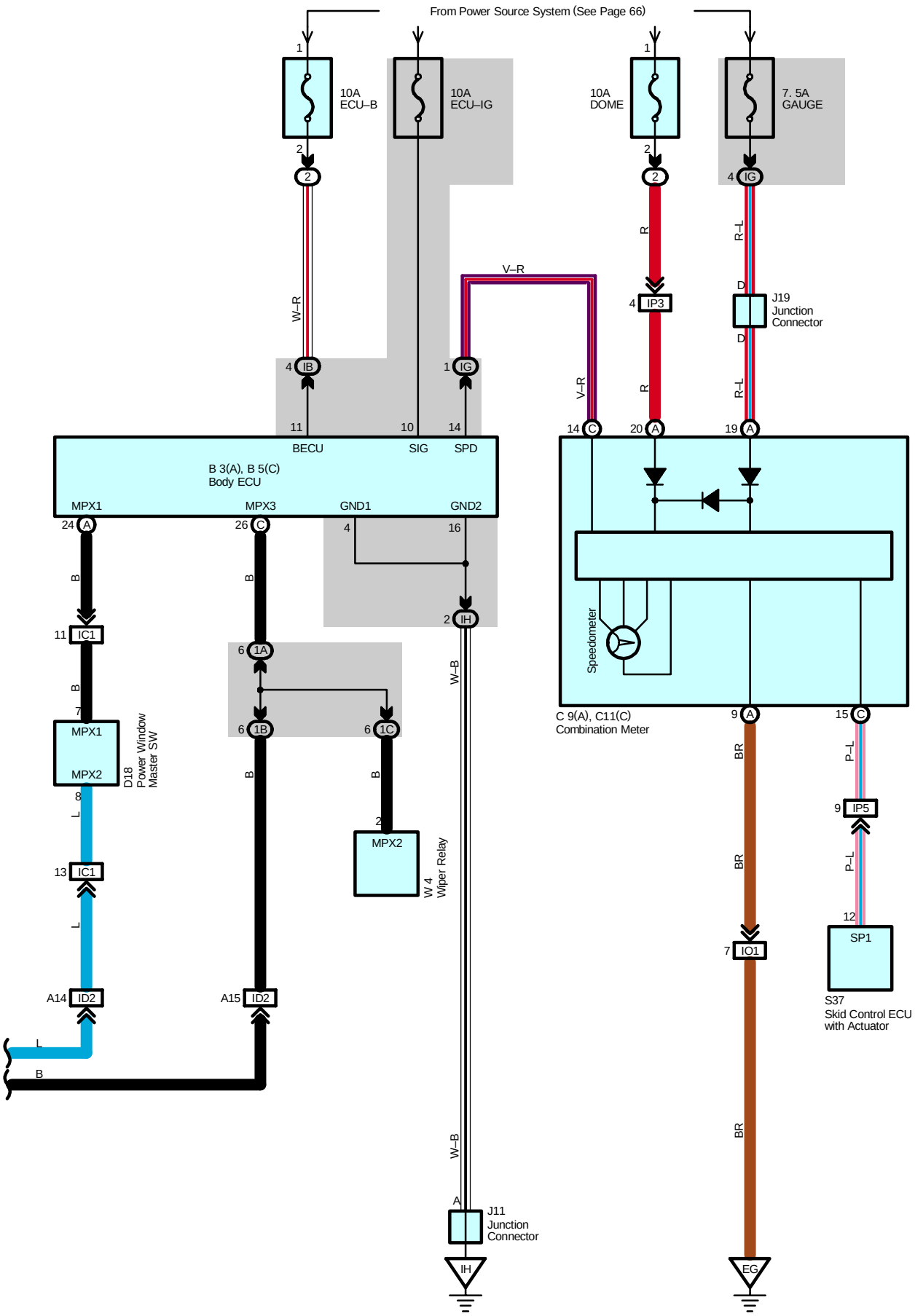
From Power Source System (See Page 66)
10A
ECU–B
10A
ECU–IG
10A
DOME
7. 5A
GAUGE
W–R
V–R
R
R–L
J19
Junction
Connector
B 3(A), B 5(C)
Body ECU
BECU
SIG
SPD
MPX1
MPX3
GND1
GND2
IC1
D18
Power Window
Master SW
MPX2
W 4
Wiper Relay
W–B
J11
Junction
Connector
C 9(A), C11(C)
Combination Meter
Speedometer
IP3
IP5
IO1
SP1
S37
Skid Control ECU
with Actuator
ID2
BR
P–L
L
B

Rear Wiper and Washer

System Outline

The rear wiper and washer system controlled by the sub–body ECU.
This system has the following function:

1. Rear Wiper Normal Operation Function

If turning the rear wiper and washer switch on to INT or ON mode, the sub–body ECU operates the rear wiper motor and controls in accordance with the selected mode.

2. Wsher–Linked Wiper with Drip–Preventive Function

To prevent the fluid from dripping after the washer has been operated, this function operates the wipers once after they have operated in unison with the washer.

3. Vehicle Speed Switching Function

When the rear wiper is operating in the ON mode and the vehicle speed is 0 km/h, the wiper switches to the INT mode.

4. Reverse0–Linked Function

This function operates the rear wiper once by shifting the shift lever to reverse when the front wiper is in operation or when it has been within 17 seconds after the stop of the front wiper.

5. Washer Operation Function

If turning the rear wiper and washer switch on to the washer mode, the sub–body ECU operates the washer motor and controls the washer.

Service Hints

S27 (A) Sub Body ECU

(A) 2–Ground : Approx. 12 volts with the ignition SW at ON position
(A)24, (A) 25–Ground: Always continuity

: Parts Location

Code		See Page	Code	See Page	Code		See Page
B3	A	38	J11	40	R29		44
B5	C	38	J14	40	S27	A	45
C9	A	38	J19	40	S28	B	45
C11	C	38	J22	40	S37		37
C15		38	J31	43	W2		37
D18		42	J32	43	W4		41

: Relay Blocks

Code	See Page	Relay Blocks (Relay Block Location)
2	22	Engine Room R/B (Engine Compartment Left)

: Junction Block and Wire Harness Connector

Code	See Page	Junction Block and Wire Harness (Connector Location)
IB	26	Engine Room Main Wire and Driver Side J/B (Lower Finish Panel)
IF	26	Floor No.2 Wire and Driver Side J/B (Lower Finish Panel)
IG	27	Instrument Panel Wire and Driver Side J/B (Lower Finish Panel)
IH		
IL		
1A	30	Instrument Panel Wire and J/B No.1 (Instrument Panel Reinforcement Left)
1B		
1C		

: **Connector Joining Wire Harness and Wire Harness**

Code	See Page	Joining Wire Harness and Wire Harness (Connector Location)
IC1	50	Front Door LH Wire and Instrument Panel Wire (Left Kick Panel)
ID1	50	Instrument Panel Wire and Floor No.2 Wire (Left Kick Panel)
ID2		
IO1	54	Engine Wire and Instrument Panel Wire (Right Side of the Blower Unit)
IP3	54	Instrument Panel Wire and Engine Room Main Wire (Right Kick Panel)
IP5		
IR3	56	Instrument Panel Wire and Floor Wire (Right Kick Panel)
BH1	60	Back Door No.1 Wire and Floor Wire (Right Quarter Panel Inner)

: **Ground Points**

Code	See Page	Ground Points Location
EG	48	Rear Bank of Left Cylinder Head
IH	50	Left Kick Panel
IJ	50	Near the Right Side of Steering Column
BP	58	Left Quarter Panel Inner
BQ	58	Back Door Panel Center

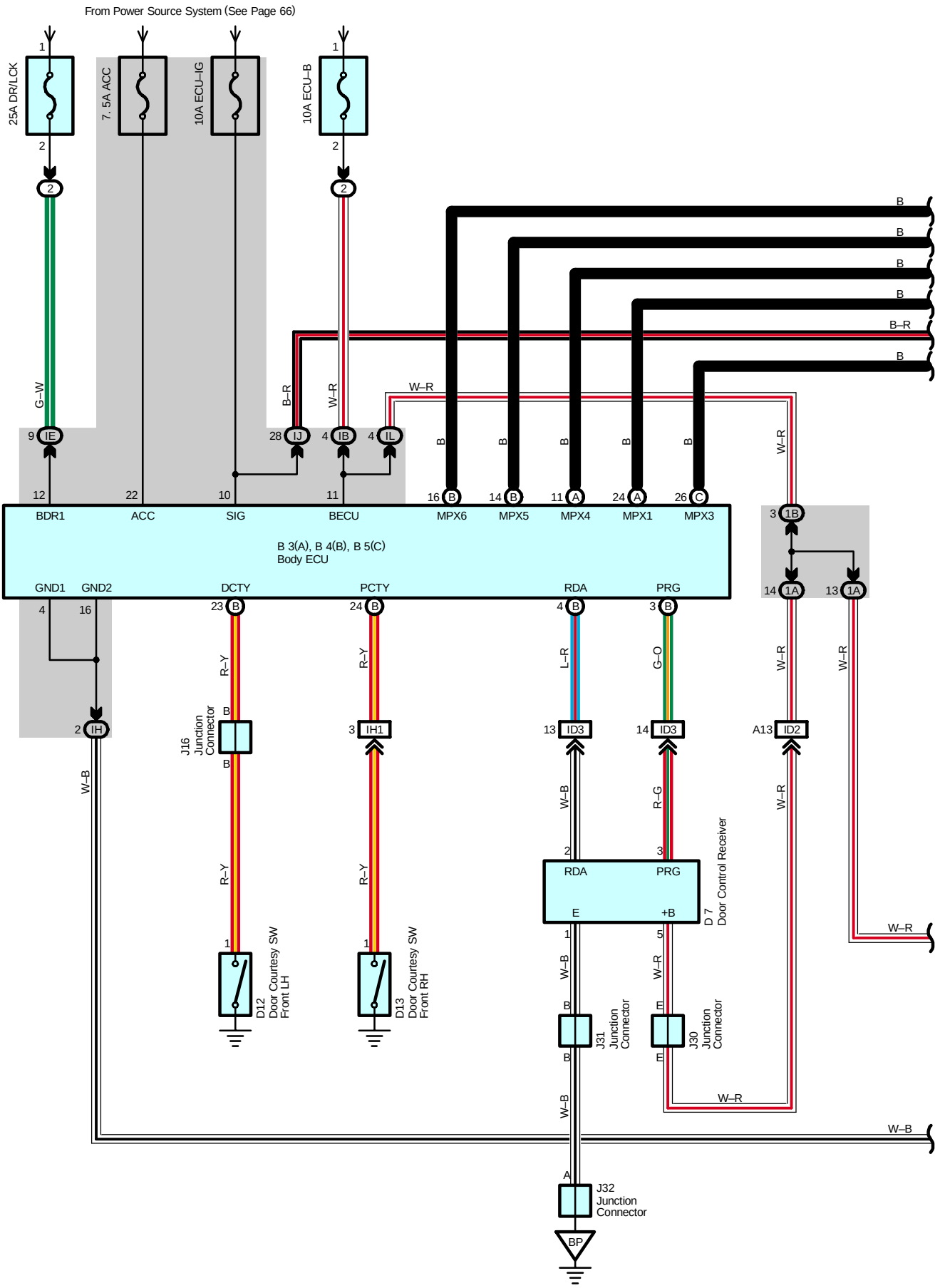
From Power Source System (See Page 66)
25A DR/LCK
7. 5A ACC
10A ECU–IG
10A ECU–B
G–W
B–R
W–R
B
9 IE
28 IJ
4 IB
4 IL
12 BDR1
22 ACC
10 SIG
11 BECU
16 B MPX6
14 B MPX5
11 A MPX4
24 A MPX1
26 C MPX3
3 1B
B 3(A), B 4(B), B 5(C)
Body ECU
GND1
GND2
DCTY
PCTY
RDA
PRG
14 1A
13 1A
23 B
24 B
4 B
3 B
R–Y
L–R
G–O
2 IH
J16 Junction Connector
3 IH1
13 ID3
14 ID3
A13 ID2
W–B
R–G
RDA
PRG
E
+B
D 7 Door Control Receiver
D12 Door Courtesy SW Front LH
D13 Door Courtesy SW Front RH
J31 Junction Connector
J30 Junction Connector
J32 Junction Connector
BP

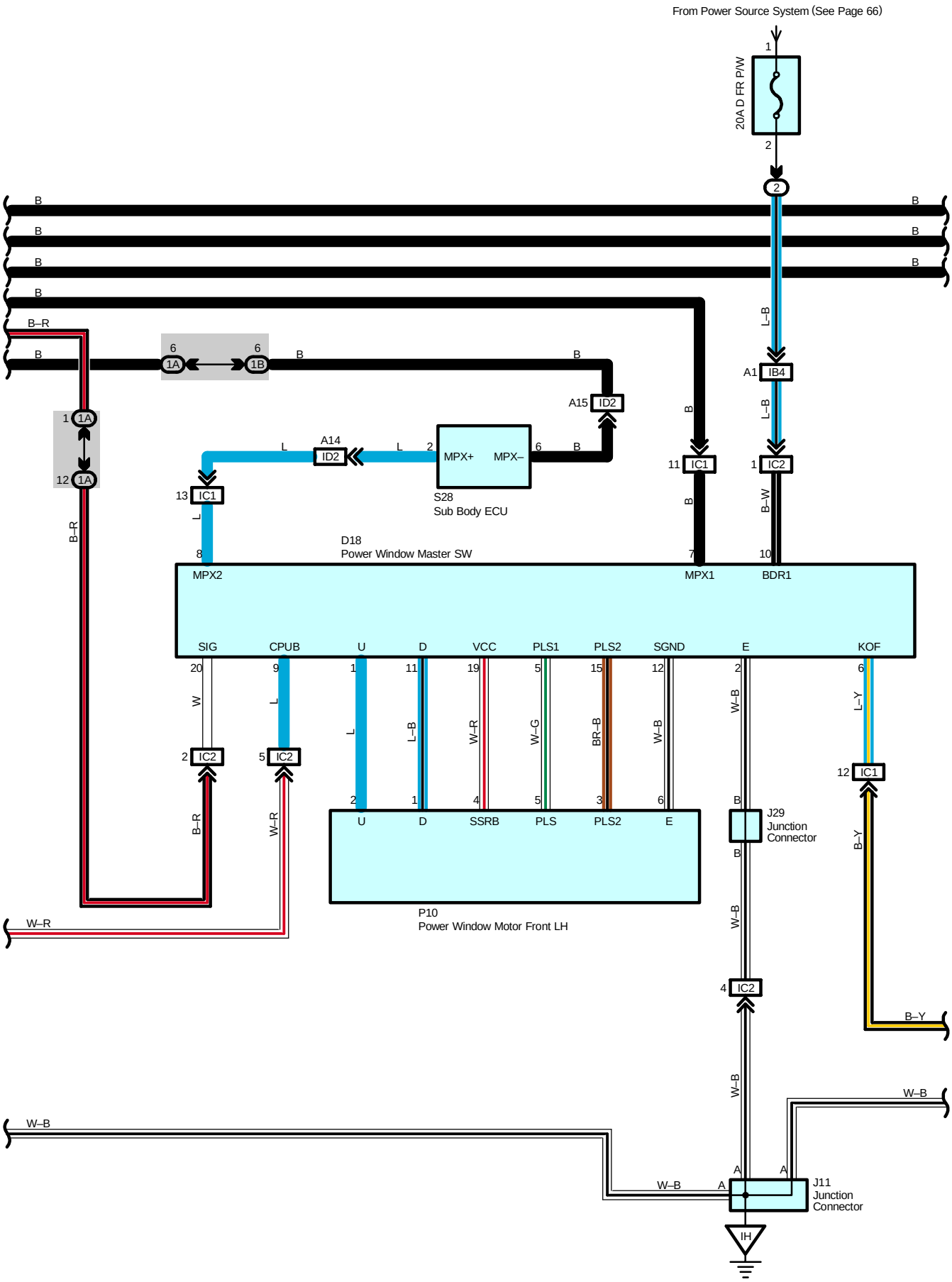
From Power Source System (See Page 66)
20A D FR P/W
1
2
B
B–R
L–B
A1
IB4
A15
ID2
A14
MPX+
MPX–
S28
Sub Body ECU
IC1
IC2
B–W
D18
Power Window Master SW
MPX2
MPX1
BDR1
SIG
CPUB
U
D
VCC
PLS1
PLS2
SGND
E
KOF
W
L
L–B
W–R
W–G
BR–B
W–B
L–Y
SSRB
PLS
P10
Power Window Motor Front LH
J29
Junction
Connector
B–Y
J11
Junction
Connector
IH

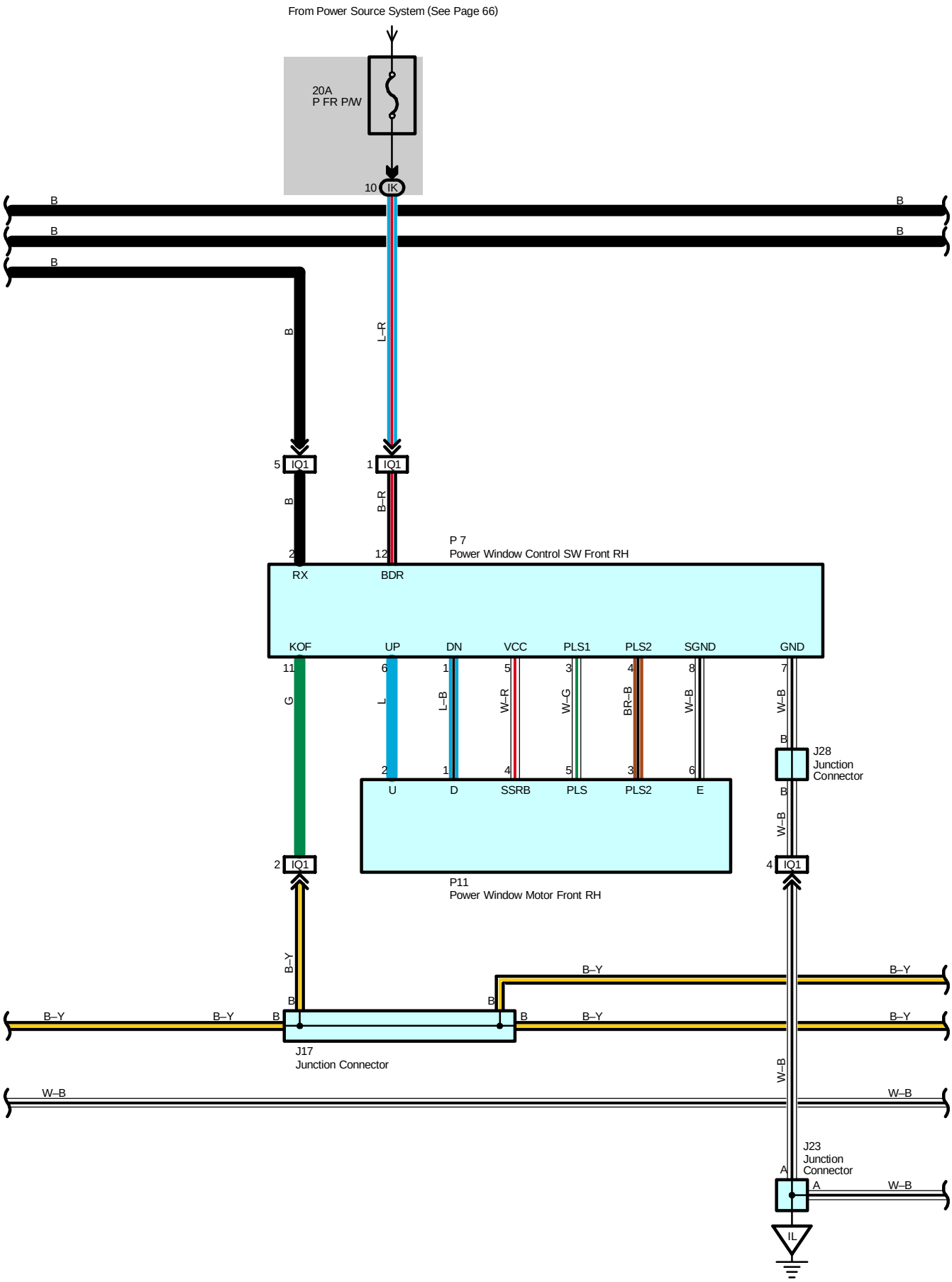
From Power Source System (See Page 66)
20A
P FR P/W
10
IK
B
B
B
B
B
B
L–R
5
IQ1
1
IQ1
B
B–R
2
12
P 7
Power Window Control SW Front RH
RX
BDR
KOF
UP
DN
VCC
PLS1
PLS2
SGND
GND
11
6
1
5
3
4
8
7
G
L
L–B
W–R
W–G
BR–B
W–B
W–B
B
J28
Junction
Connector
2
1
4
5
3
6
U
D
SSRB
PLS
PLS2
E
B
W–B
2
IQ1
4
IQ1
P11
Power Window Motor Front RH
B–Y
B–Y
B–Y
B
B
B
B–Y
B–Y
B–Y
B–Y
J17
Junction Connector
W–B
W–B
W–B
J23
Junction
Connector
A
A
W–B
IL

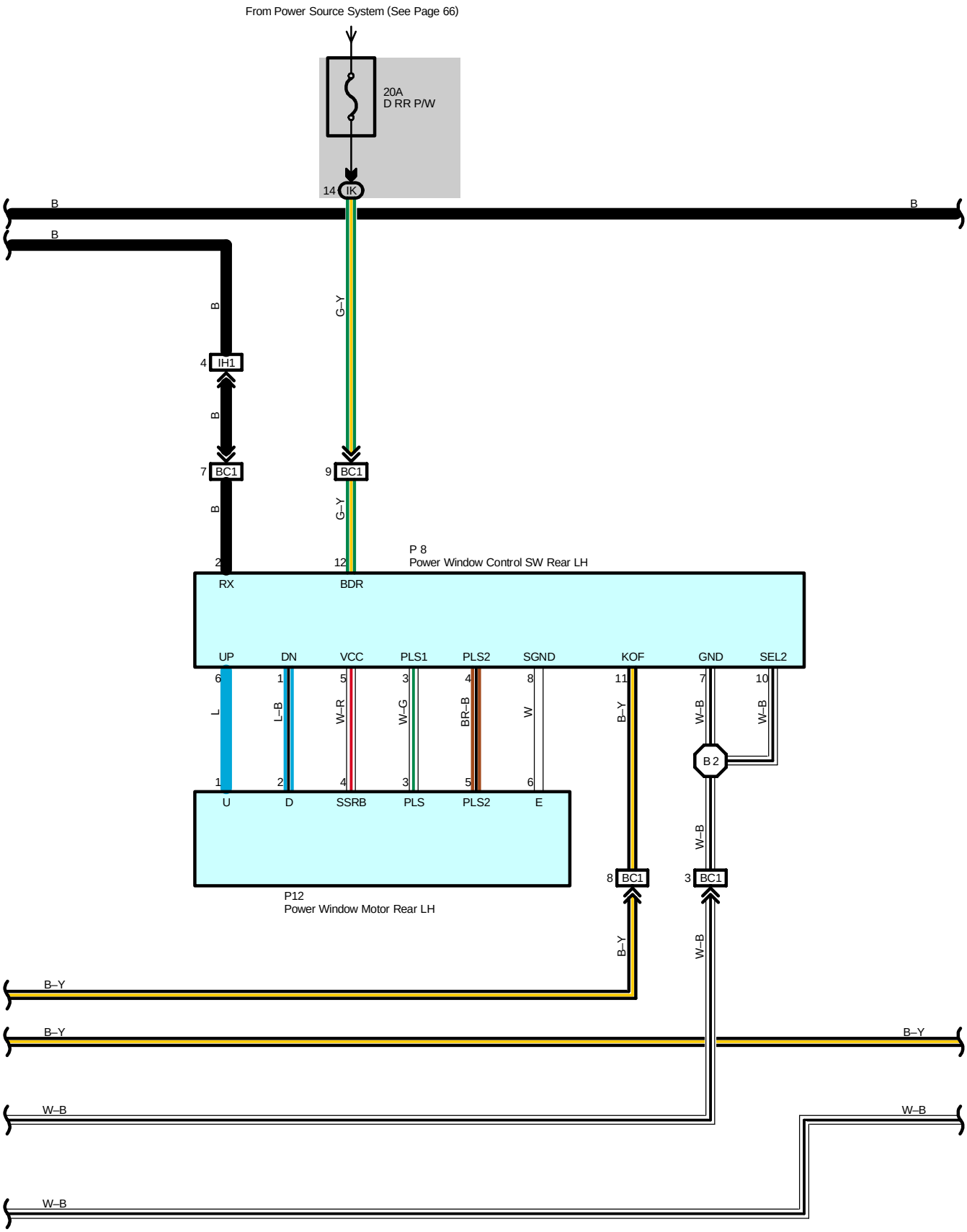
From Power Source System (See Page 66)
20A
D RR P/W
14 IK
B
B
B
B
G–Y
4 IH1
B
7 BC1
9 BC1
B
G–Y
2
12
P 8
Power Window Control SW Rear LH
RX
BDR
UP
DN
VCC
PLS1
PLS2
SGND
KOF
GND
SEL2
6
1
5
3
4
8
11
7
10
L
L–B
W–R
W–G
BR–B
W
B–Y
W–B
W–B
B 2
1
2
4
3
5
6
U
D
SSRB
PLS
PLS2
E
W–B
8 BC1
3 BC1
P12
Power Window Motor Rear LH
B–Y
W–B
B–Y
B–Y
B–Y
W–B
W–B
W–B

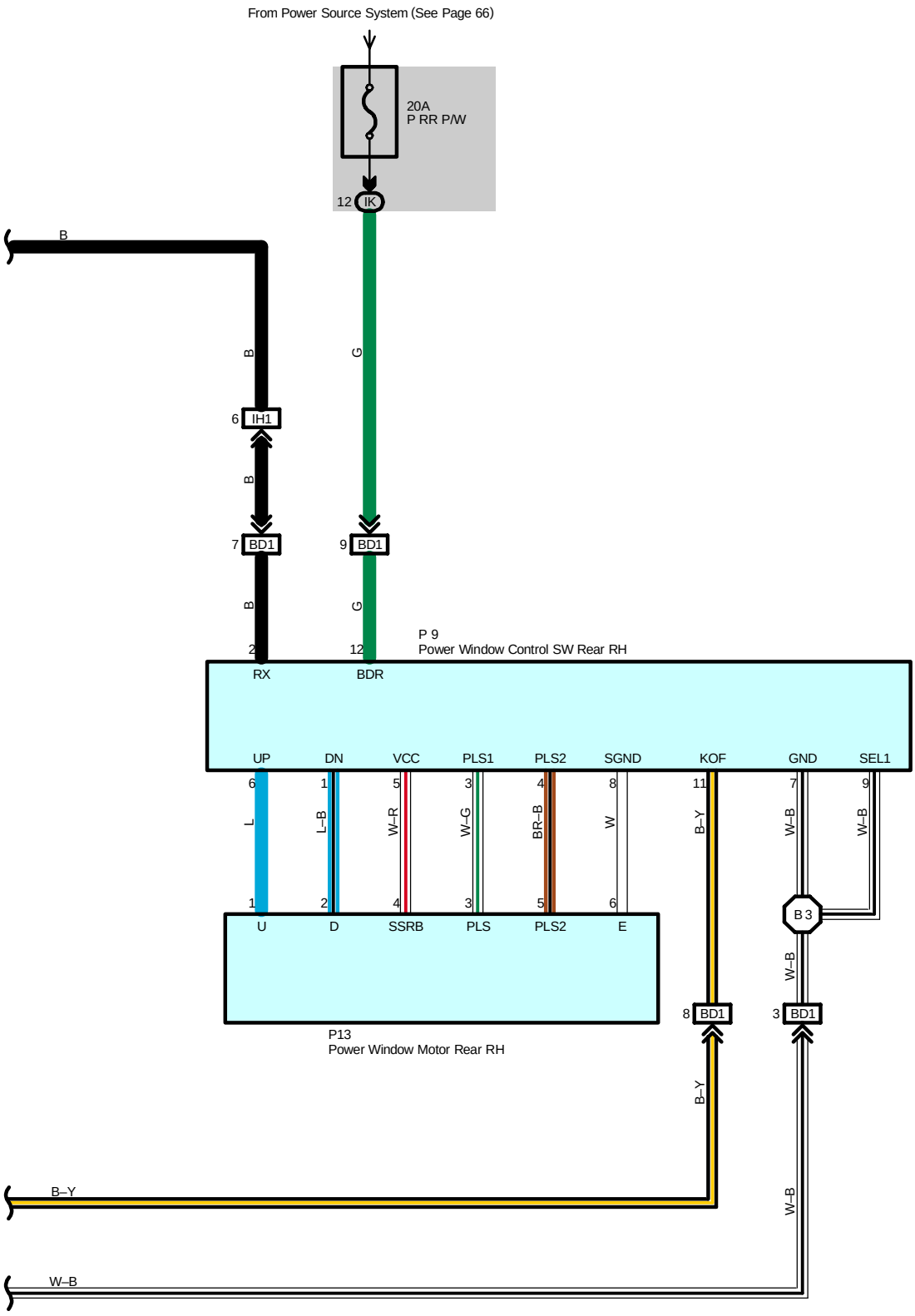
From Power Source System (See Page 66)
20A
P RR P/W
12 IK
B
B
G
6 IH1
B
7 BD1
9 BD1
B
G
2
12
P 9
Power Window Control SW Rear RH
RX
BDR
UP
DN
VCC
PLS1
PLS2
SGND
KOF
GND
SEL1
6
1
5
3
4
8
11
7
9
L
L–B
W–R
W–G
BR–B
W
B–Y
W–B
W–B
1
2
4
3
5
6
U
D
SSRB
PLS
PLS2
E
B 3
W–B
8 BD1
3 BD1
P13
Power Window Motor Rear RH
B–Y
B–Y
W–B
W–B

System Outline

∗ The power window system is controlled by the body ECU. This system has following features.

1. Manual Up and Down Function

This function causes the window to open or close while the power window switch is being pulled halfway up or pushed halfway down. The window stops as soon as the switch is released.

2. One–Touch Auto Up and Down Function

The all doors one–touch auto up and down function enables the window of front doors to be fully opened or closed at a touch of the power window switch.

3. Jam Protection Function

A jam protection function automatically stops the power window and moves it downward if a foreign object gets jammed in the window during one–touch auto–up operation.

4. Remote Control Function

The up and down operations of the front passenger door window and the rear door windows can be controlled by operating the power window master switch.

5. Ker–Off Operation Function

The driver's door key–off operation function makes it possible to operate the power window for approximately 45 seconds after the ignition switch is turned to the ACC or LOCK position, if the front doors are not opened.

∗ When the battery terminal or fuse is disconnected, the glass position of all doors have to be reset to the initial positions, door by door, by the power window control switch in accordance with the following procedure:

A) Reconnect the battery terminal or fuse.

B) Turn ON the ignition switch.

C) Lower the window of each door by the power window switch to open it halfway or more.

D) Then move the window up by the power window switch to close it fully.
Do not release the switch for at least one second after the window is fully closed.

Service Hints

Body ECU

22–Ground : Approx. 12 volts with the ignition SW at ACC or ON position
11, 12–Ground : Always approx. 12 volts
10–Ground : Approx. 12 volts with the ignition SW at ON position
4, 16–Ground : Always continuity

D18 Power Window Master SW

9, 10–Ground : Always approx. 12 volts
20–Ground : Approx. 12 volts with the ignition SW at ON position
2–Ground : Always continuity

P7 Power Window Control SW Front RH

12–Ground : Always approx. 12 volts
7–Ground : Always continuity

P8 Power Window Control SW Rear LH

12–Ground : Always approx. 12 volts
7, 10–Ground : Always continuity

P9 Power Window Control SW Rear RH

12–Ground : Always approx. 12 volts
7, 9–Ground : Always continuity

Power Window

: Parts Location

Code		See Page	Code	See Page	Code	See Page
B3	A	38	J16	40	P7	44
B4	B	38	J17	40	P8	44
B5	C	38	J23	40	P9	44
D7		42	J28	43	P10	44
D12		42	J29	43	P11	44
D13		42	J30	43	P12	44
D18		42	J31	43	P13	44
J11		40	J32	43	S28	45

: Relay Blocks

Code	See Page	Relay Blocks (Relay Block Location)
2	22	Engine Room R/B (Engine Compartment Left)

: Junction Block and Wire Harness Connector

Code	See Page	Junction Block and Wire Harness (Connector Location)
IB	26	Engine Room Main Wire and Driver Side J/B (Lower Finish Panel)
IE		
IH	27	Instrument Panel Wire and Driver Side J/B (Lower Finish Panel)
IJ		
IK		
IL		
1A	30	Instrument Panel Wire and J/B No.1 (Instrument Panel Reinforcement Left)
1B		

: Connector Joining Wire Harness and Wire Harness

Code	See Page	Joining Wire Harness and Wire Harness (Connector Location)
IB4	50	Instrument Panel Wire and Engine Room Main Wire (Left Kick Panel)
IC1	50	Front Door LH Wire and Instrument Panel Wire (Left Kick Panel)
IC2		
ID2	50	Instrument Panel Wire and Floor No.2 Wire (Left Kick Panel)
ID3		
IH1	52	Instrument Panel Wire and Instrument Panel Wire (Near the J/B No.1)
IQ1	56	Front Door RH Wire and Instrument Panel Wire (Right Kick Panel)
BC1	58	Rear Door LH Wire and Instrument Panel Wire (Center Pillar LH)
BD1	58	Rear Door RH Wire and Instrument Panel Wire (Center Pillar RH)

: Ground Points

Code	See Page	Ground Points Location
IH	50	Left Kick Panel
IL	50	Right Kick Panel
BP	58	Left Quarter Panel Inner

: Splice Points

Code	See Page	Wire Harness with Splice Points	Code	See Page	Wire Harness with Splice Points
B2	60	Rear Door LH Wire	B3	60	Rear Door RH Wire

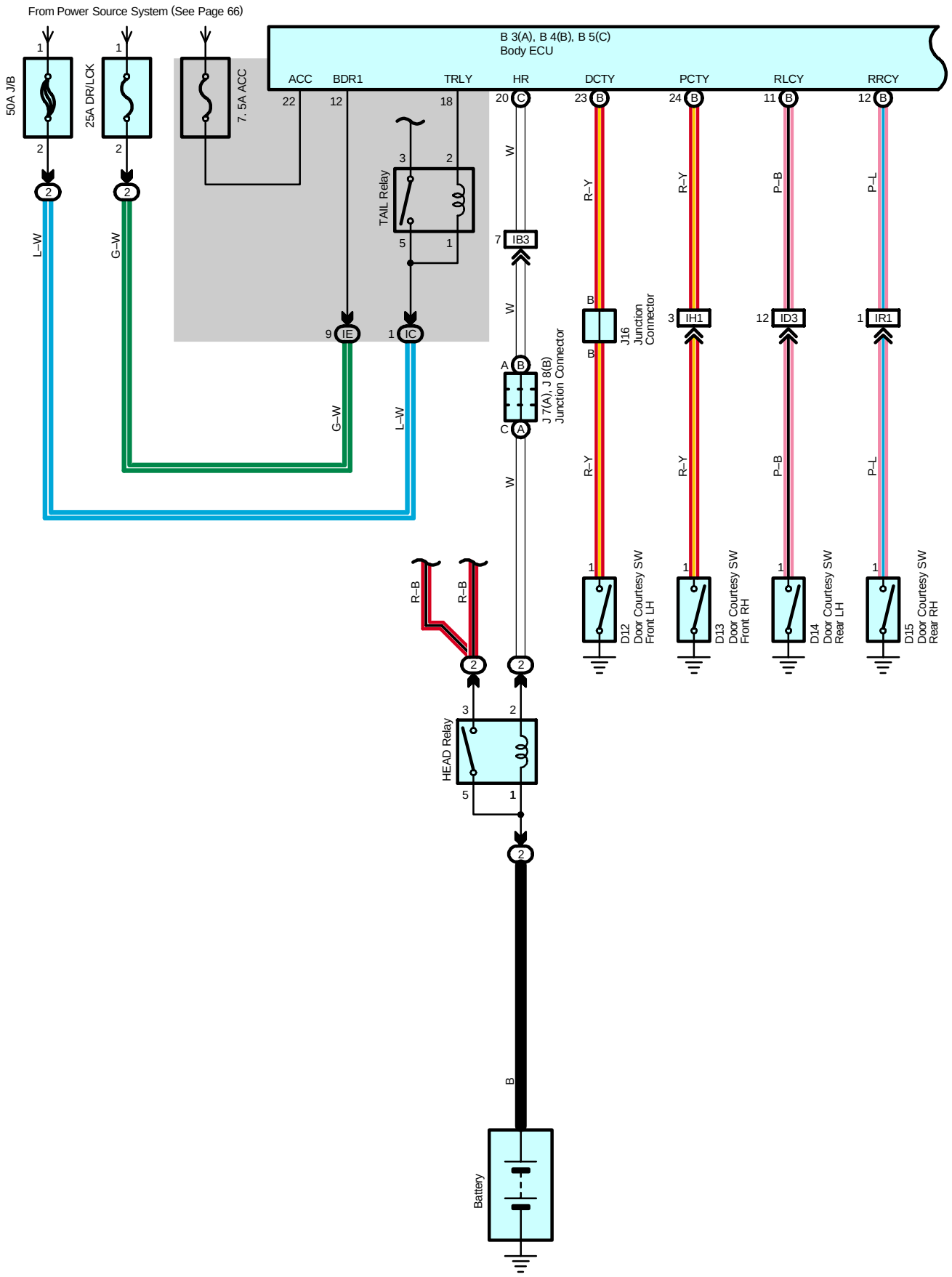
From Power Source System (See Page 66)
B 3(A), B 4(B), B 5(C)
Body ECU
ACC
BDR1
TRLY
HR
DCTY
PCTY
RLCY
RRCY
50A J/B
25A DR/LCK
7. 5A ACC
TAIL Relay
IB3
IE
IC
IH1
ID3
IR1
J 7(A), J 8(B)
Junction Connector
J16
Junction
Connector
D12
Door Courtesy SW
Front LH
D13
Door Courtesy SW
Front RH
D14
Door Courtesy SW
Rear LH
D15
Door Courtesy SW
Rear RH
HEAD Relay
Battery
L–W
G–W
W
R–Y
P–B
P–L
R–B
B

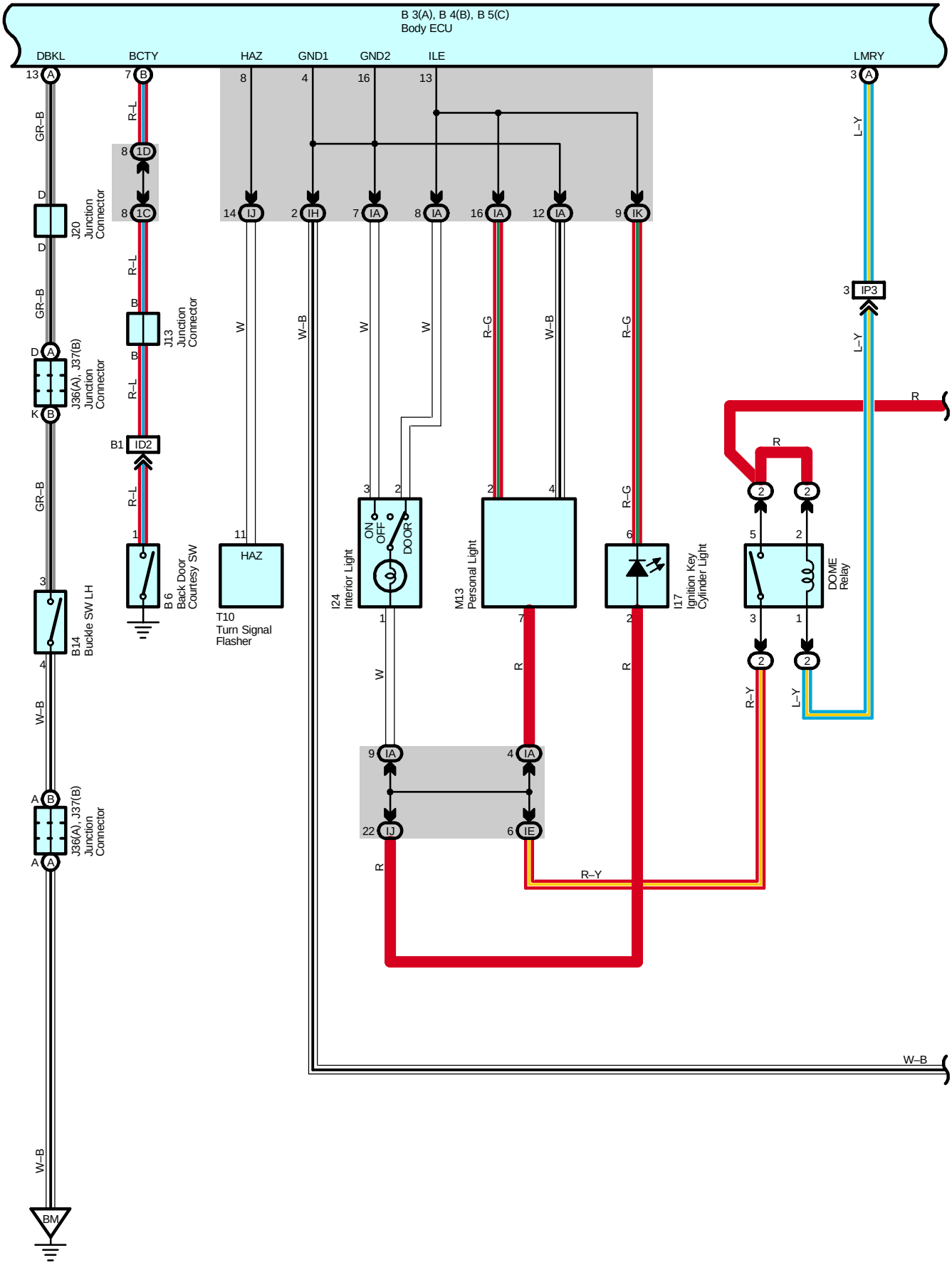
B 3(A), B 4(B), B 5(C)
Body ECU
DBKL
BCTY
HAZ
GND1
GND2
ILE
LMRY
J20 Junction Connector
J13 Junction Connector
J36(A), J37(B) Junction Connector
B14 Buckle SW LH
B 6 Back Door Courtesy SW
T10 Turn Signal Flasher
I24 Interior Light
ON
OFF
DOOR
M13 Personal Light
I17 Ignition Key Cylinder Light
DOME Relay
IP3
ID2
BM
GR–B
R–L
W
W–B
R–G
L–Y
R
R–Y

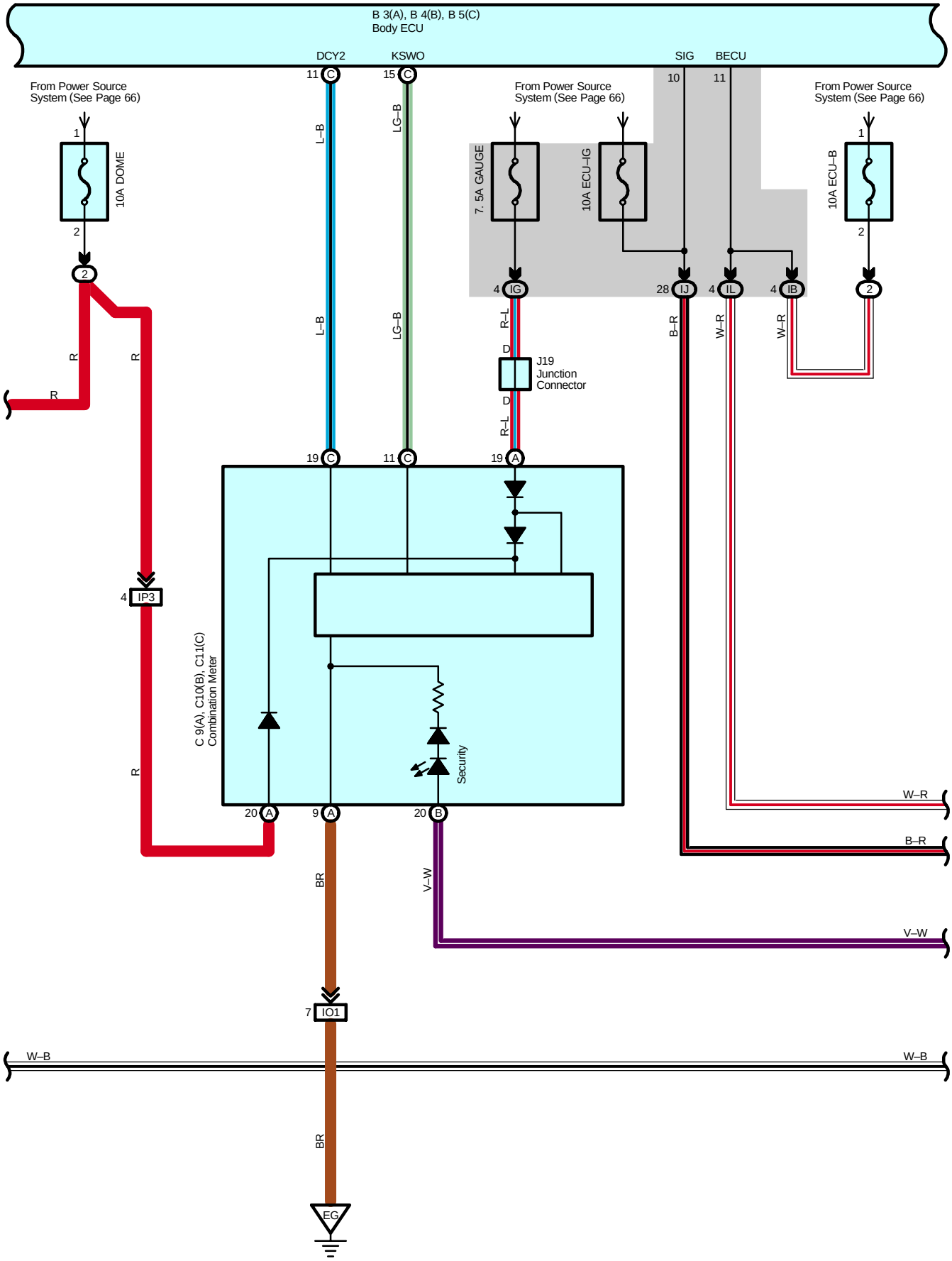
B 3(A), B 4(B), B 5(C)
Body ECU
DCY2
KSWO
SIG
BECU
From Power Source System (See Page 66)
10A DOME
7. 5A GAUGE
10A ECU–IG
10A ECU–B
J19 Junction Connector
C 9(A), C10(B), C11(C) Combination Meter
Security
IP3
IO1
EG
L–B
LG–B
R–L
B–R
W–R
V–W
BR
R
W–B

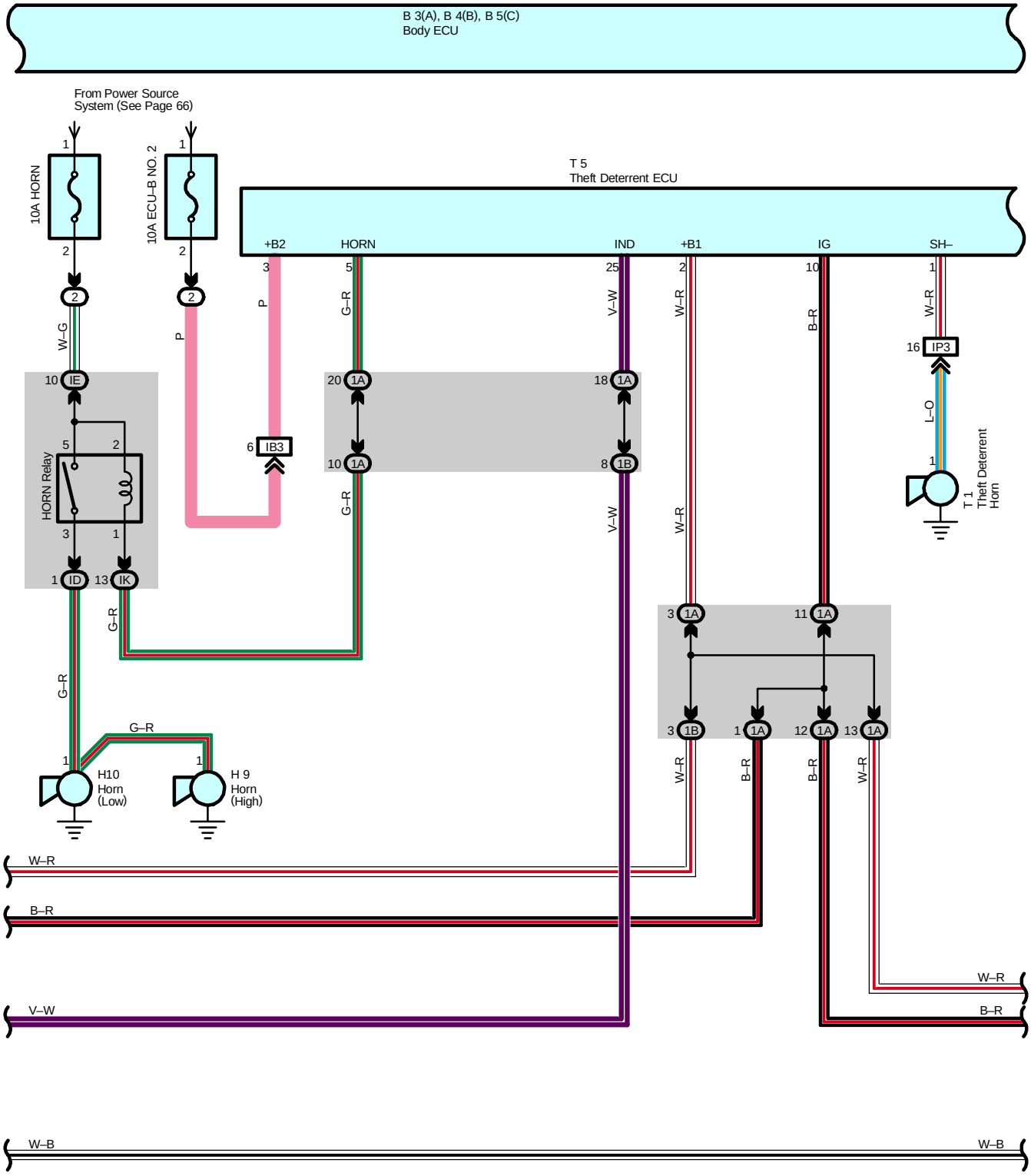
B 3(A), B 4(B), B 5(C)
Body ECU
From Power Source System (See Page 66)
10A HORN
10A ECU–B NO. 2
T 5
Theft Deterrent ECU
+B2
HORN
IND
+B1
IG
SH–
W–G
P
G–R
V–W
W–R
B–R
L–O
IE
IB3
1A
1B
IP3
HORN Relay
ID
IK
H10
Horn
(Low)
H 9
Horn
(High)
T 1
Theft Deterrent
Horn
W–B

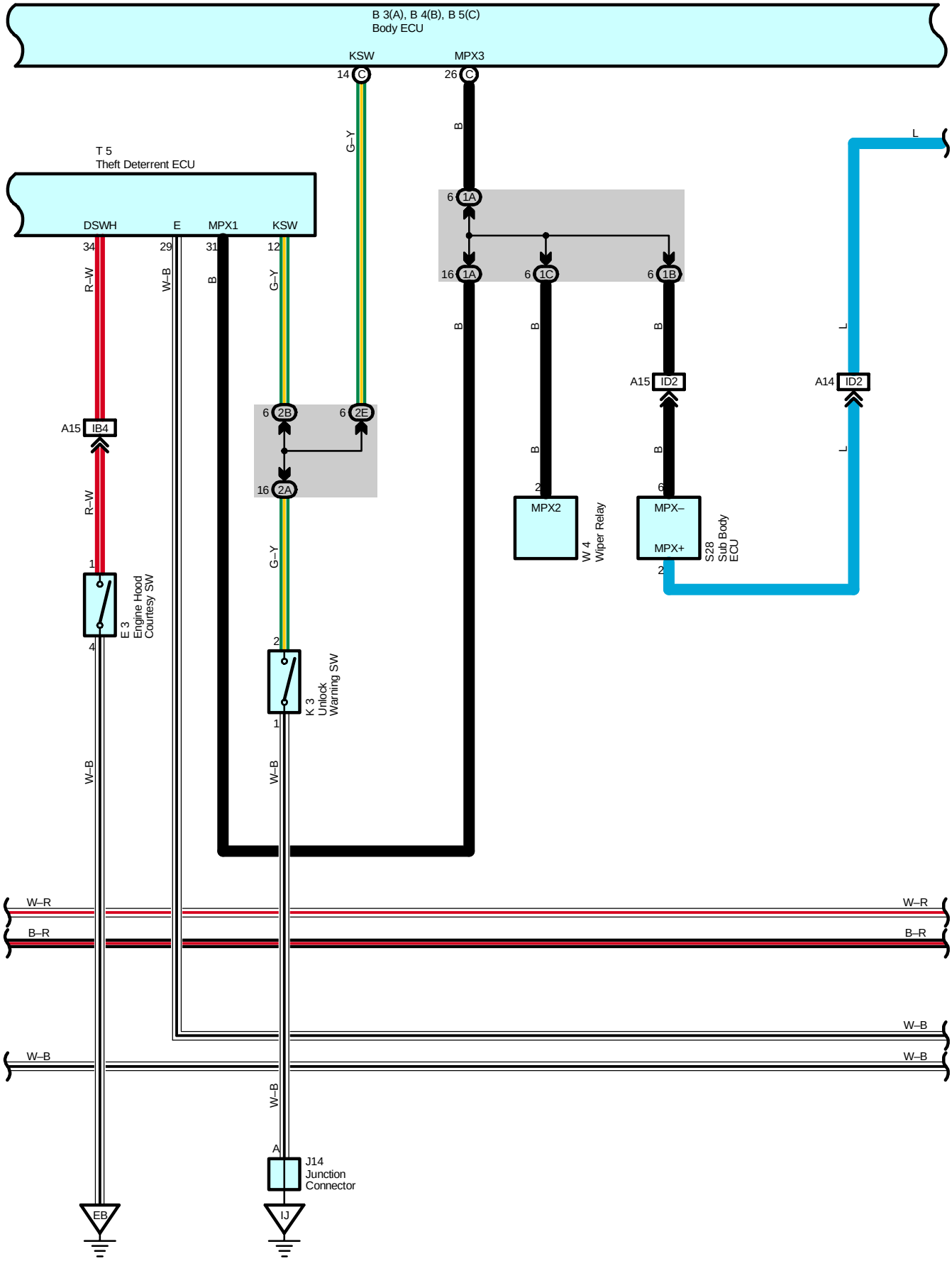
B 3(A), B 4(B), B 5(C)
Body ECU
KSW
MPX3
14 C
26 C
G–Y
B
L
T 5
Theft Deterrent ECU
DSWH
E
MPX1
KSW
34
29
31
12
R–W
W–B
B
G–Y
6 1A
16 1A
6 1C
6 1B
A15 IB4
6 2B
6 2E
16 2A
A15 ID2
A14 ID2
MPX2
W 4
Wiper Relay
MPX–
MPX+
S28
Sub Body
ECU
E 3
Engine Hood
Courtesy SW
K 3
Unlock
Warning SW
W–R
B–R
W–B
A
J14
Junction
Connector
EB
IJ

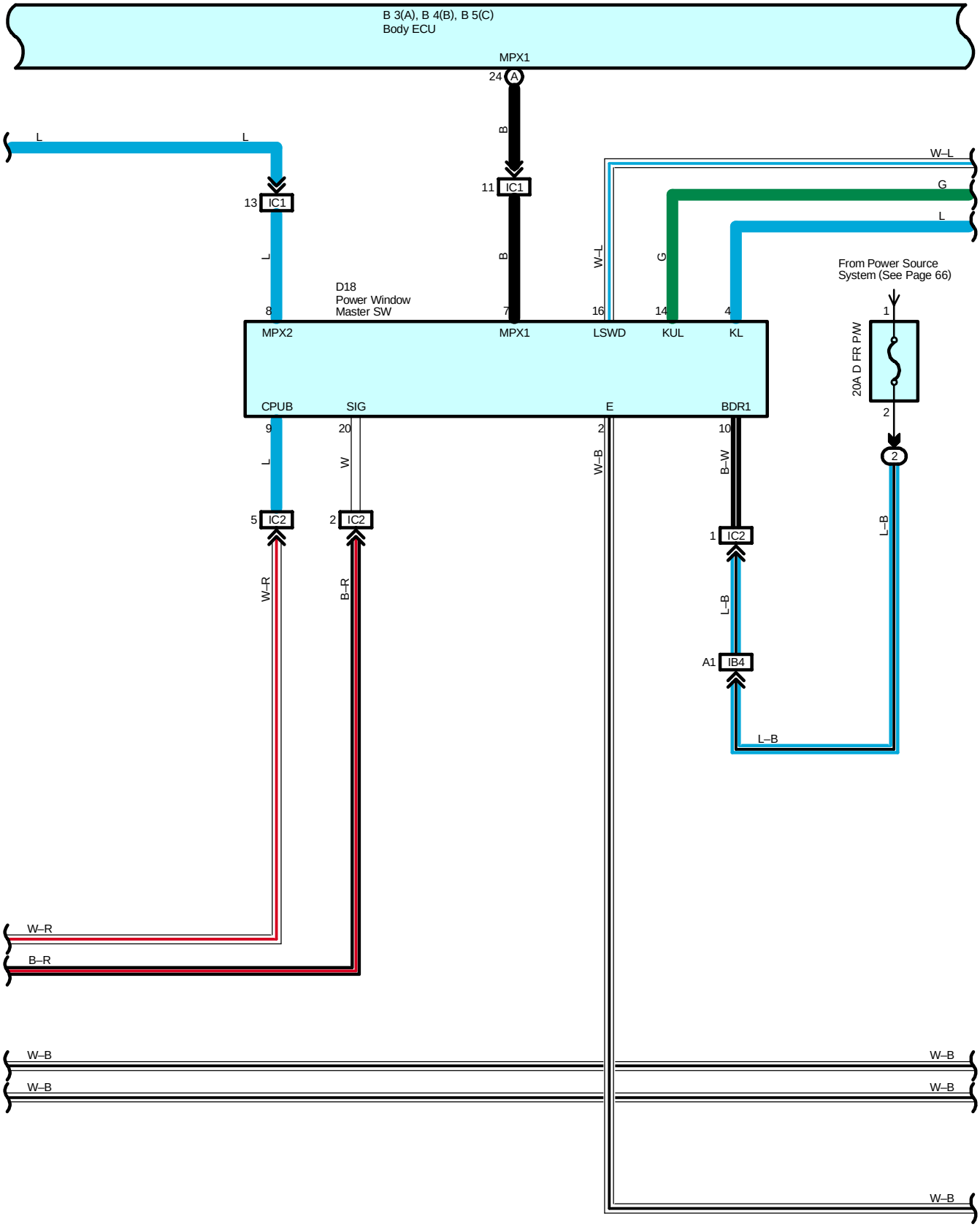
B 3(A), B 4(B), B 5(C)
Body ECU
MPX1
24
A
B
11
IC1
L
L
13
IC1
L
W–L
G
L
W–L
G
B
From Power Source
System (See Page 66)
D18
Power Window
Master SW
8
7
16
14
4
1
MPX2
MPX1
LSWD
KUL
KL
20A D FR P/W
CPUB
SIG
E
BDR1
2
9
20
2
10
L
W
W–B
B–W
2
5
IC2
2
IC2
1
IC2
L–B
W–R
B–R
L–B
A1
IB4
L–B
W–R
B–R
W–B
W–B
W–B
W–B
W–B

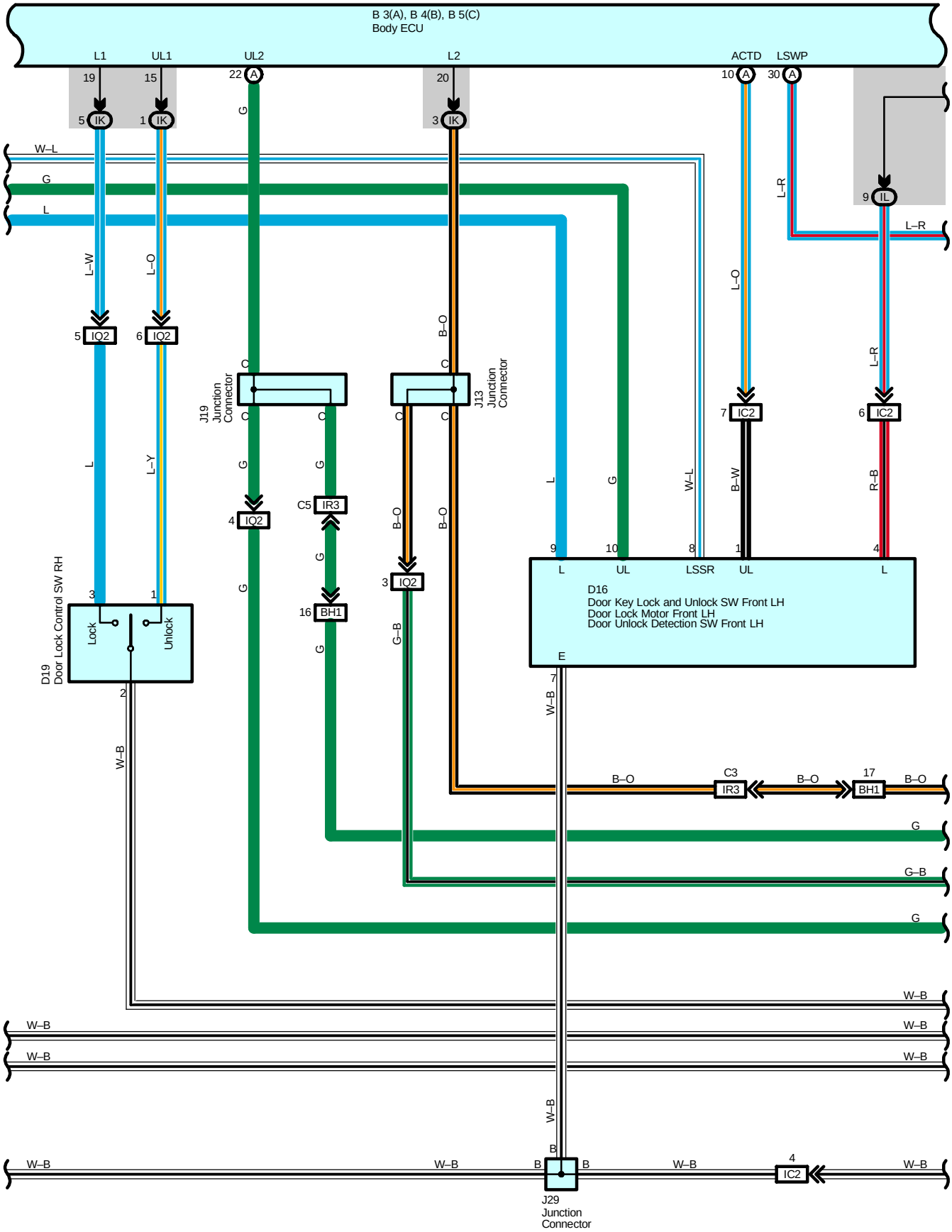
B 3(A), B 4(B), B 5(C)
Body ECU
L1
UL1
UL2
L2
ACTD
LSWP
19
15
22
20
10
30
5 IK
1 IK
3 IK
9 IL
W–L
G
L
L–W
L–O
B–O
L–R
5 IQ2
6 IQ2
4 IQ2
3 IQ2
16 BH1
C5 IR3
7 IC2
6 IC2
J19 Junction Connector
J13 Junction Connector
B–W
R–B
9 L
10 UL
8 LSSR
1 UL
4 L
D16
Door Key Lock and Unlock SW Front LH
Door Lock Motor Front LH
Door Unlock Detection SW Front LH
D19
Door Lock Control SW RH
Lock
Unlock
L–Y
G–B
E
7
W–B
C3 IR3
17 BH1
B
J29 Junction Connector
4 IC2

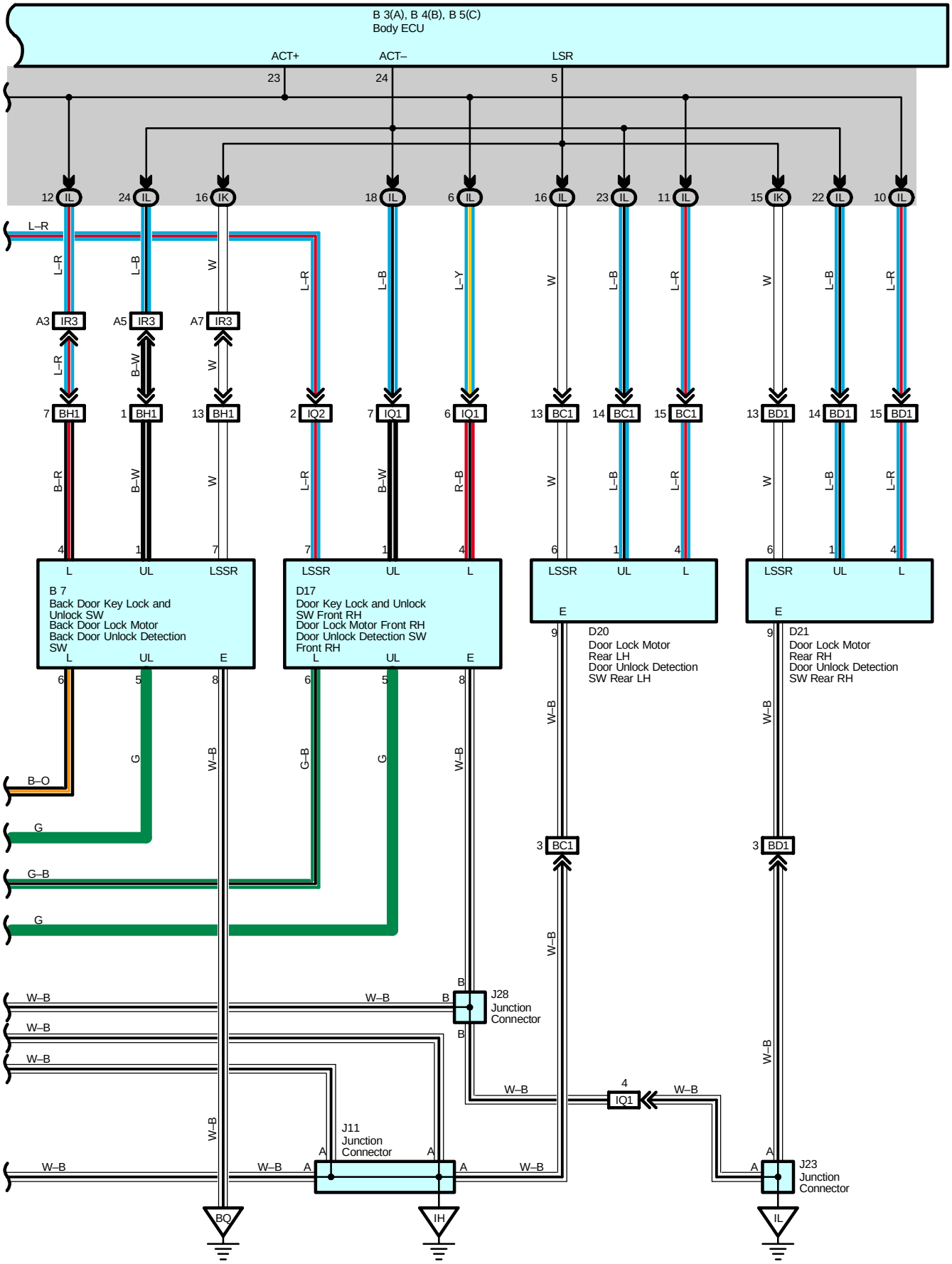
B 3(A), B 4(B), B 5(C)
Body ECU
ACT+
ACT–
LSR
B 7
Back Door Key Lock and Unlock SW
Back Door Lock Motor
Back Door Unlock Detection SW
D17
Door Key Lock and Unlock SW Front RH
Door Lock Motor Front RH
Door Unlock Detection SW Front RH
D20
Door Lock Motor Rear LH
Door Unlock Detection SW Rear LH
D21
Door Lock Motor Rear RH
Door Unlock Detection SW Rear RH
J28 Junction Connector
J11 Junction Connector
J23 Junction Connector

Door Lock Control and Theft Deterrent

System Outline

Door Lock Control System

The door lock control system is controlled by the body ECU.
This system has following features. However, the adopted function differs depending on the establishment.

1. Manual Lock and Unlock Operation

Pressing the door lock control switch on the driver or front passenger door to the lock side will lock all the doors and pressing it to the unlock side will unlock all the doors.

2. Key–Linked Lock and Unlock Function

This function, which is linked with the key cylinder, can lock or unlock all the doors when a lock or unlock operation is effected.

3. Manual Unlock Prohibition Function

Performing the door lock operation with a transmitter or an ignition key will prohibit the unlock operation by the door lock control switch.

4. 2–Step Unlock Function

This function is provided to unlock the driver's door by turning the key cylinder first and unlock passenger's door by turning it the second time.

5. Key Confine Prevention Function

When the key is inserted in the ignition key cylinder and if you perform the door lock operation, all the doors will be unlocked.

6. Shift–Linked Automatic Door Lock

When the conditions listed below are met consecutively, this function causes all the doors to be automatically locked.

* The ignition switch is turned from the OFF or ACC position to the ON position.
* All doors are closed.
* The shift lever is moved out of P position.
* Either one of the doors is unlocked.

7. Theft Deterrent System–Linked Door Lock Function

When the body ECU receives the door lock signal from the theft deterrent system, "all doors lock" operation will be performed in spite of the current door lock condition.

Service Hints

Body ECU

11, 12–Ground : Always approx. 12 volts
10–Ground : Approx. 12 volts with the ignition SW at ON position
22–Ground : Approx. 12 volts with the ignition SW at ACC or ON position
4, 16–Ground : Always continuity

○ : **Parts Location**

Code		See Page	Code		See Page	Code		See Page
B3	A	38	D18		42	J19		40
B4	B	38	D19		42	J20		40
B5	C	38	D20		42	J23		40
B6		42	D21		42	J28		43
B7		42	E3		36	J29		43
B14		46	H9		36	J36	A	46
C9	A	38	H10		36	J37	B	46
C10	B	38	I17		39	K3		40
C11	C	38	I24		43	M13		44
D12		42	J7	A	40	S28		45
D13		42	J8	B	40	T1		37
D14		42	J11		40	T5		41
D15		42	J13		40	T10		41
D16		42	J14		40	W4		41
D17		42	J16		40			

: Relay Blocks

Code	See Page	Relay Blocks (Relay Block Location)
2	22	Engine Room R/B (Engine Compartment Left)

: Junction Block and Wire Harness Connector

Code	See Page	Junction Block and Wire Harness (Connector Location)
IA	26	Roof Wire and Driver Side J/B (Lower Finish Panel)
IB	26	Engine Room Main Wire and Driver Side J/B (Lower Finish Panel)
IC		
ID		
IE		
IG	27	Instrument Panel Wire and Driver Side J/B (Lower Finish Panel)
IH		
IJ		
IK		
IL		
1A	30	Instrument Panel Wire and J/B No.1 (Instrument Panel Reinforcement Left)
1B		
1C		
1D		
2A	32	Instrument Panel Wire and J/B No.2 (Instrument Panel Reinforcement Center)
2B		
2E		

: Connector Joining Wire Harness and Wire Harness

Code	See Page	Joining Wire Harness and Wire Harness (Connector Location)
IB3	50	Instrument Panel Wire and Engine Room Main Wire (Left Kick Panel)
IB4		
IC1	50	Front Door LH Wire and Instrument Panel Wire (Left Kick Panel)
IC2		
ID2	50	Instrument Panel Wire and Floor No.2 Wire (Left Kick Panel)
ID3		
IH1	52	Instrument Panel Wire and Instrument Panel Wire (Near the J/B No.1)
IO1	54	Engine Wire and Instrument Panel Wire (Right Side of the Blower Unit)
IP3	54	Instrument Panel Wire and Engine Room Main Wire (Right Kick Panel)
IQ1	56	Front Door RH Wire and Instrument Panel Wire (Right Kick Panel)
IQ2		
IR1	56	Instrument Panel Wire and Floor Wire (Right Kick Panel)
IR3		
BC1	58	Rear Door LH Wire and Instrument Panel Wire (Center Pillar LH)
BD1	58	Rear Door RH Wire and Instrument Panel Wire (Center Pillar RH)
BH1	60	Back Door No.1 Wire and Floor Wire (Right Quarter Panel Inner)

: Ground Points

Code	See Page	Ground Points Location
EB	48	Front Left Fender
EG	48	Rear Bank of Left Cylinder Head
IH	50	Left Kick Panel
IJ	50	Near the Right Side of Steering Column
IL	50	Right Kick Panel
BM	58	Under the Driver's Seat
BQ	58	Back Door Panel Center

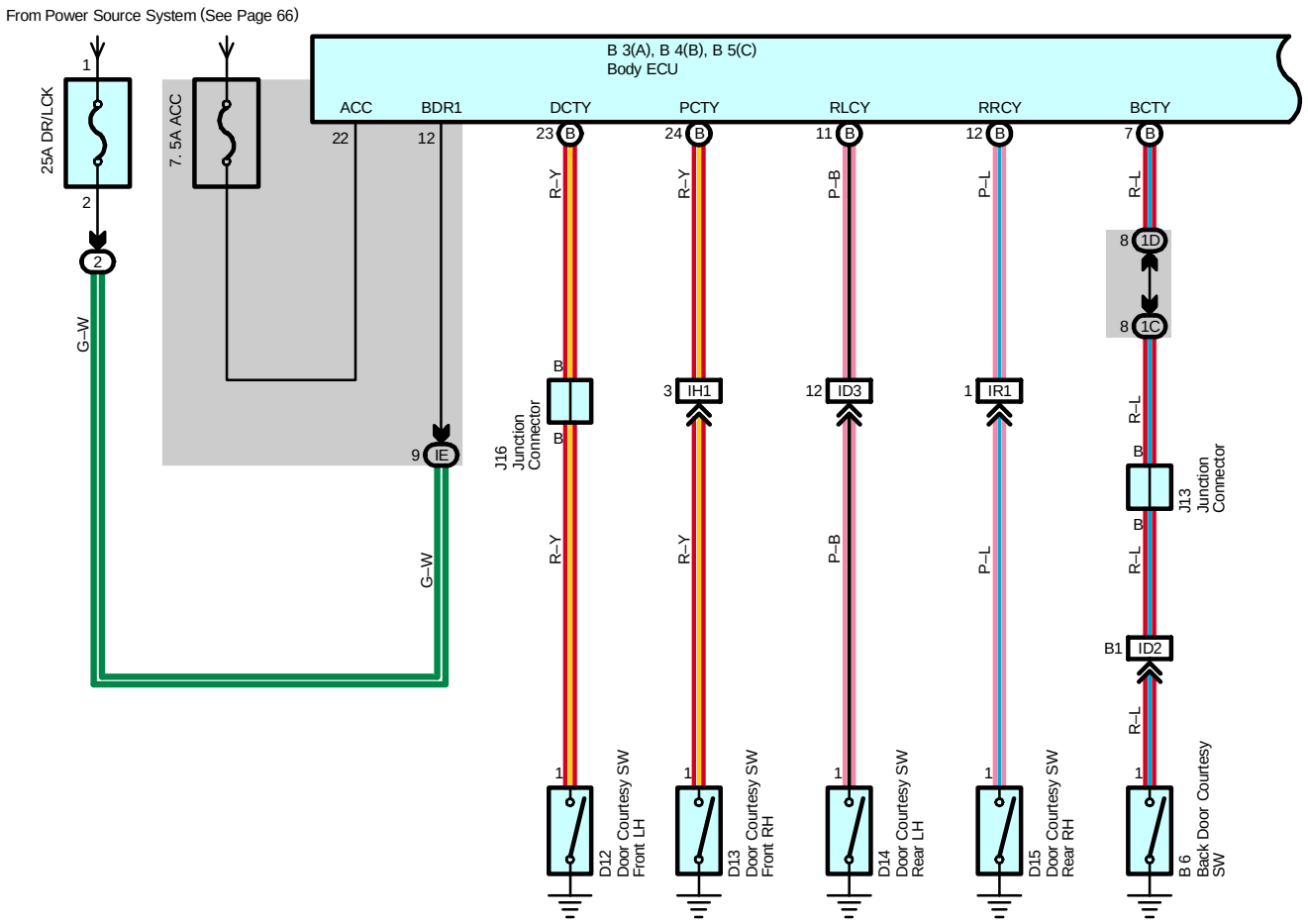
From Power Source System (See Page 66)
B 3(A), B 4(B), B 5(C)
Body ECU
ACC
BDR1
DCTY
PCTY
RLCY
RRCY
BCTY
25A DR/LCK
7. 5A ACC
G–W
R–Y
P–B
P–L
R–L
J16 Junction Connector
J13 Junction Connector
IH1
ID3
IR1
ID2
IE
1D
1C
D12 Door Courtesy SW Front LH
D13 Door Courtesy SW Front RH
D14 Door Courtesy SW Rear LH
D15 Door Courtesy SW Rear RH
B 6 Back Door Courtesy SW

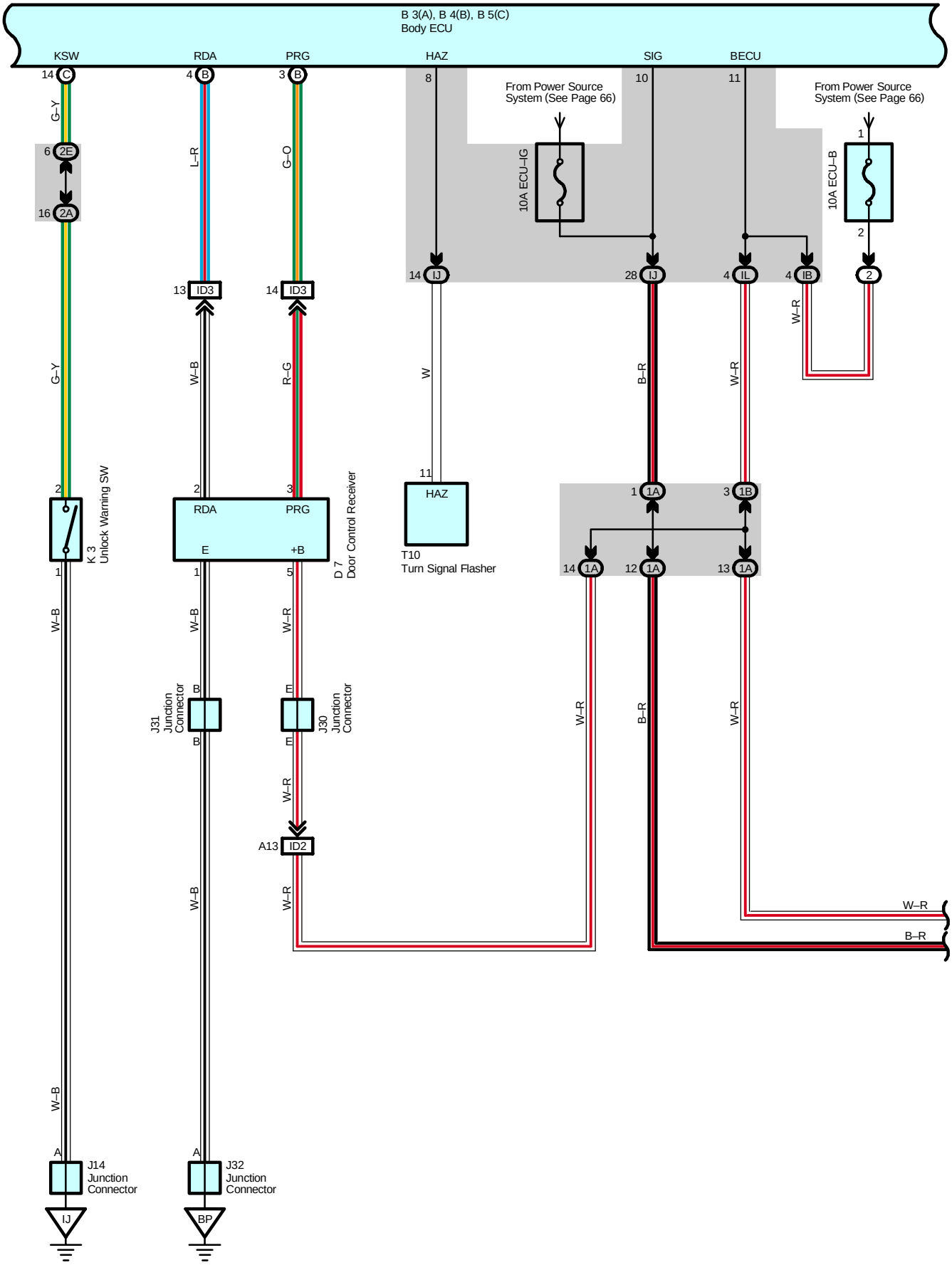
B 3(A), B 4(B), B 5(C)
Body ECU
KSW
RDA
PRG
HAZ
SIG
BECU
From Power Source System (See Page 66)
From Power Source System (See Page 66)
10A ECU–IG
10A ECU–B
K 3
Unlock Warning SW
D 7
Door Control Receiver
RDA
PRG
E
+B
T10
Turn Signal Flasher
HAZ
J31 Junction Connector
J30 Junction Connector
J14 Junction Connector
J32 Junction Connector
IJ
BP
G–Y
L–R
G–O
W–B
R–G
W
B–R
W–R

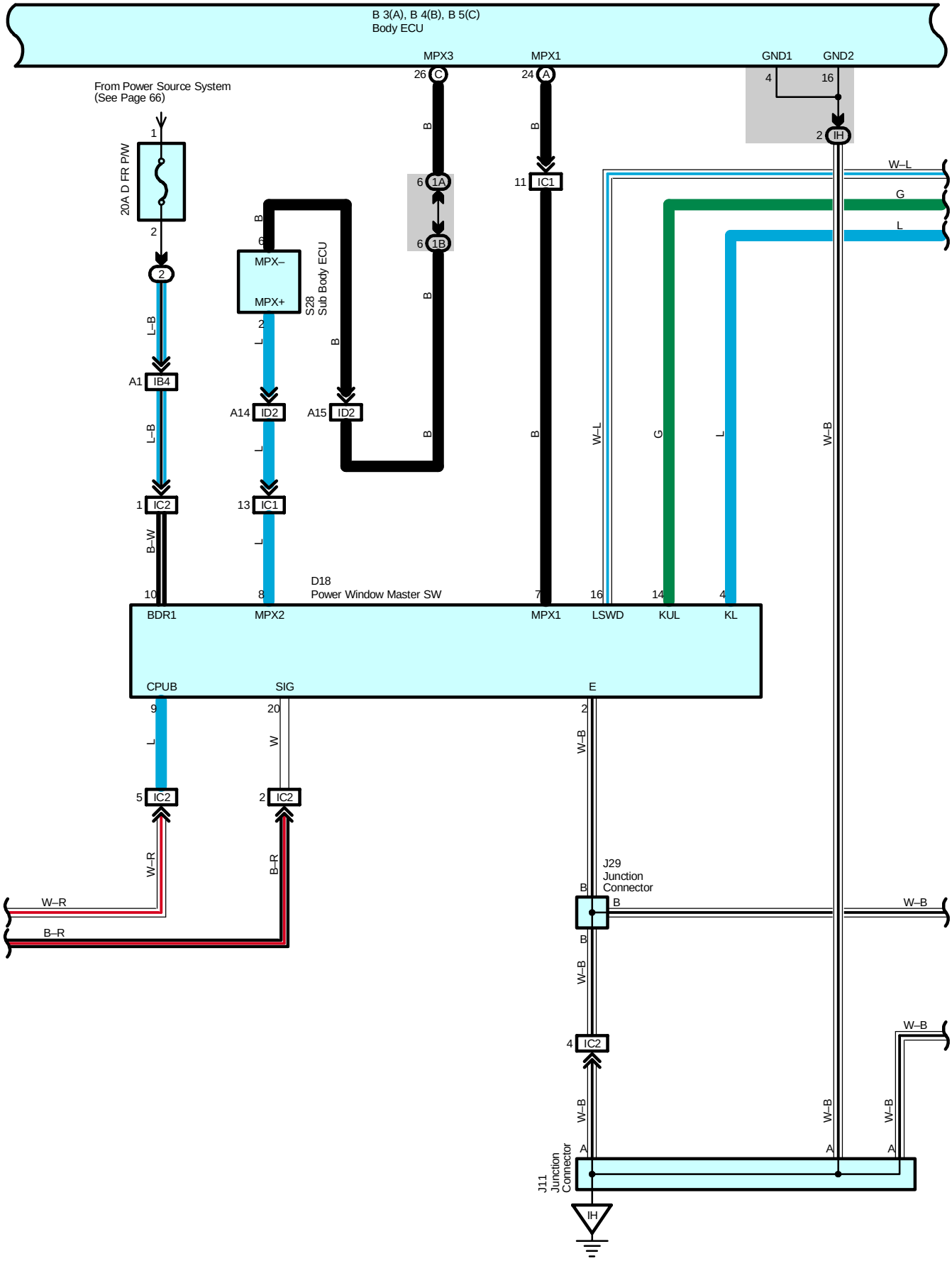
B 3(A), B 4(B), B 5(C)
Body ECU
MPX3
MPX1
GND1
GND2
From Power Source System
(See Page 66)
20A D FR P/W
MPX–
MPX+
S28
Sub Body ECU
IB4
ID2
IC1
IC2
IH
D18
Power Window Master SW
BDR1
MPX2
MPX1
LSWD
KUL
KL
CPUB
SIG
E
J29
Junction
Connector
J11
Junction
Connector
W–L
G
L
W–B
W–R
B–R
B–W

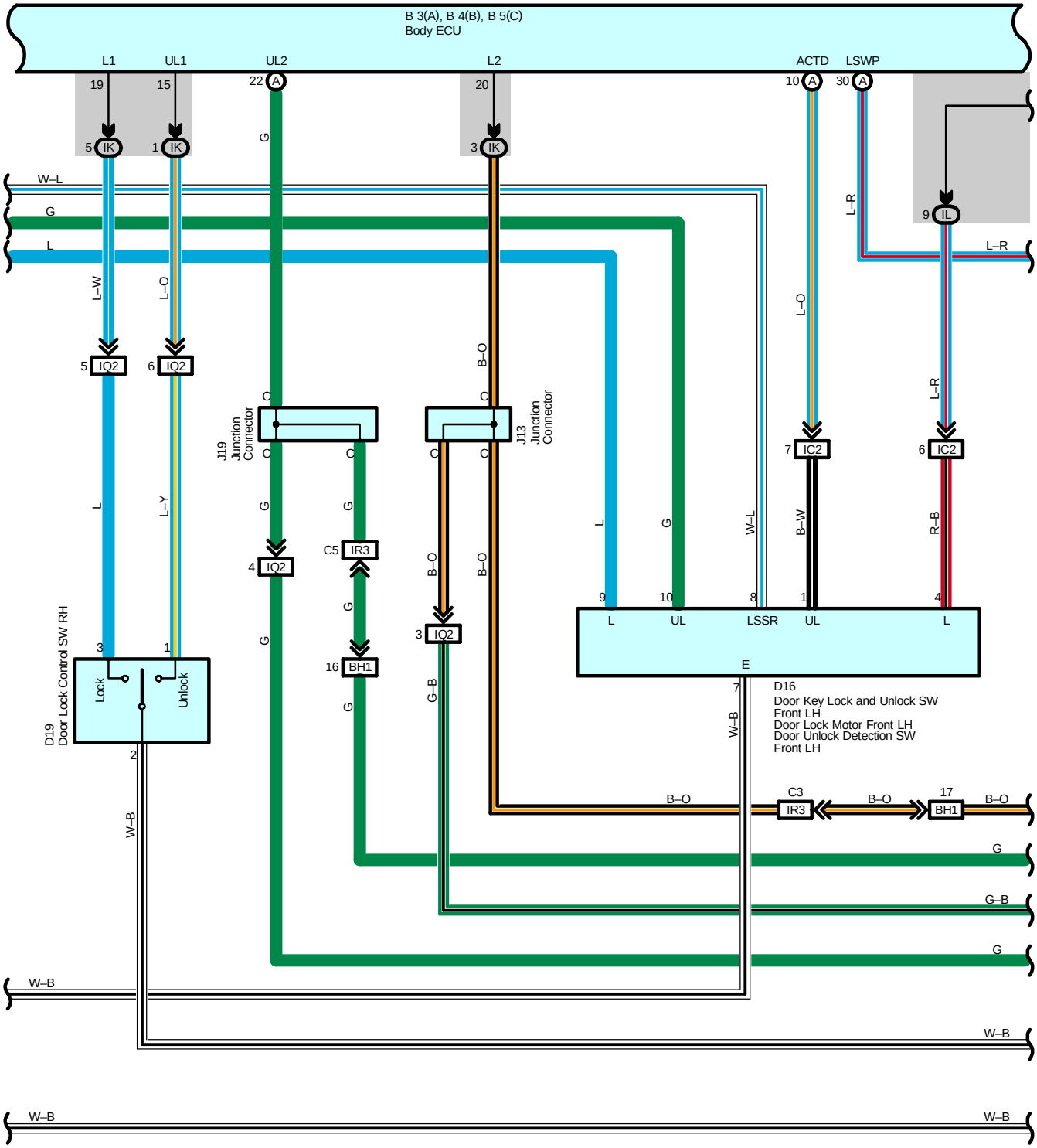
B 3(A), B 4(B), B 5(C)
Body ECU
L1
UL1
UL2
L2
ACTD
LSWP
19
15
22
20
10
30
5 IK
1 IK
3 IK
9 IL
W–L
G
L
L–W
L–O
B–O
L–R
5 IQ2
6 IQ2
4 IQ2
3 IQ2
7 IC2
6 IC2
J19
Junction
Connector
J13
Junction
Connector
C5 IR3
16 BH1
C3 IR3
17 BH1
B–W
R–B
L–Y
G–B
9
10
8
1
4
L
UL
LSSR
UL
L
E
D16
Door Key Lock and Unlock SW
Front LH
Door Lock Motor Front LH
Door Unlock Detection SW
Front LH
D19
Door Lock Control SW RH
Lock
Unlock
3
1
2
7
W–B

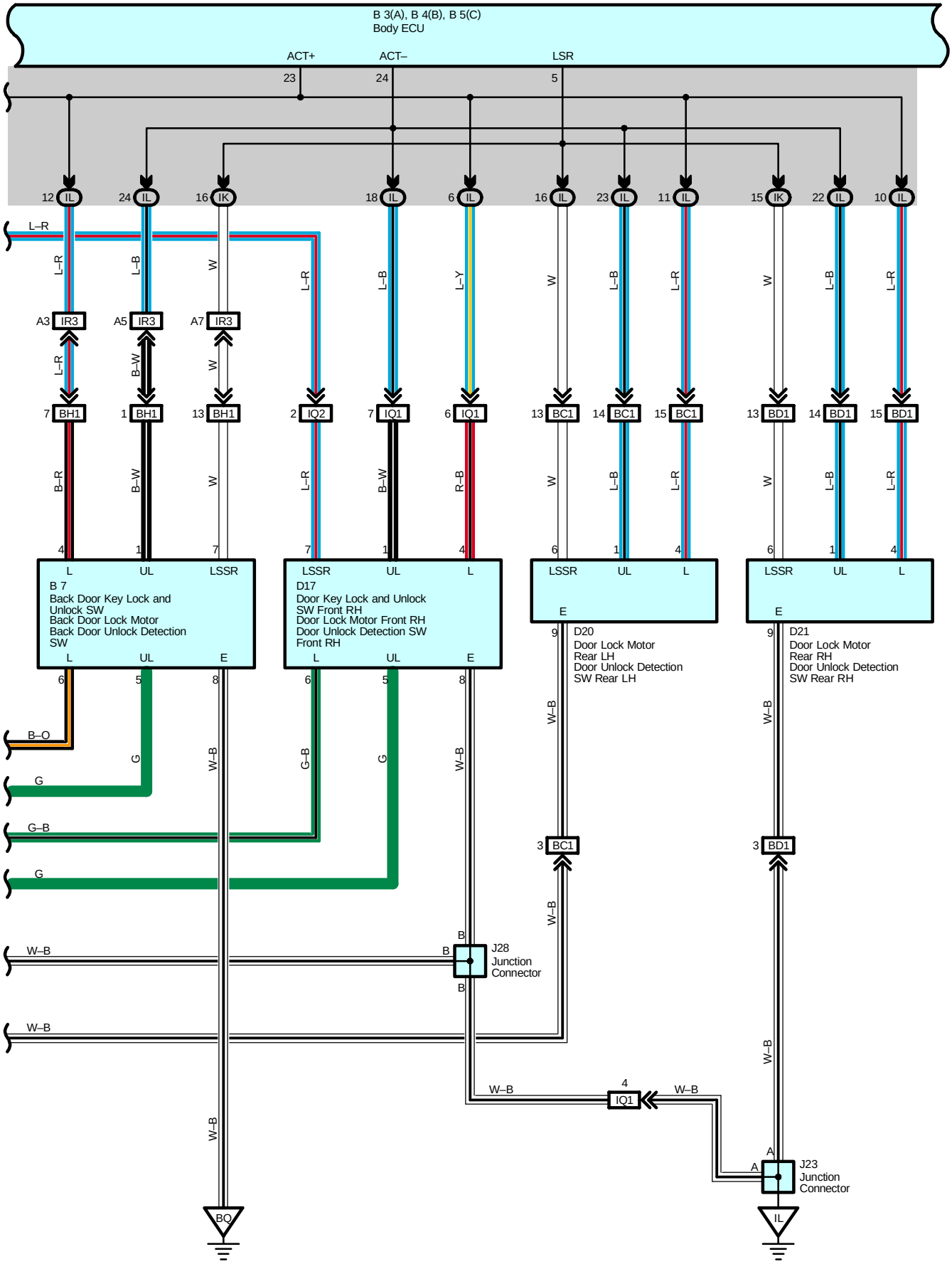
B 3(A), B 4(B), B 5(C)
Body ECU
ACT+
ACT–
LSR
23
24
5
12 IL
24 IL
16 IK
18 IL
6 IL
16 IL
23 IL
11 IL
15 IK
22 IL
10 IL
L–R
L–R
L–B
W
L–R
L–B
L–Y
W
L–B
L–R
W
L–B
L–R
A3 IR3
A5 IR3
A7 IR3
L–R
B–W
W
7 BH1
1 BH1
13 BH1
2 IQ2
7 IQ1
6 IQ1
13 BC1
14 BC1
15 BC1
13 BD1
14 BD1
15 BD1
B–R
B–W
W
L–R
B–W
R–B
W
L–B
L–R
W
L–B
L–R
4
1
7
7
1
4
6
1
4
6
1
4
L
UL
LSSR
B 7
Back Door Key Lock and Unlock SW
Back Door Lock Motor
Back Door Unlock Detection SW
L
UL
E
LSSR
UL
L
D17
Door Key Lock and Unlock SW Front RH
Door Lock Motor Front RH
Door Unlock Detection SW Front RH
L
UL
E
LSSR
UL
L
E
9
D20
Door Lock Motor Rear LH
Door Unlock Detection SW Rear LH
LSSR
UL
L
E
9
D21
Door Lock Motor Rear RH
Door Unlock Detection SW Rear RH
6
5
8
6
5
8
B–O
G
W–B
G–B
G
W–B
G
G–B
G
W–B
W–B
3 BC1
3 BD1
B
J28
Junction Connector
B
W–B
W–B
W–B
W–B
4
IQ1
W–B
W–B
A
J23
Junction Connector
A
W–B
BQ
IL

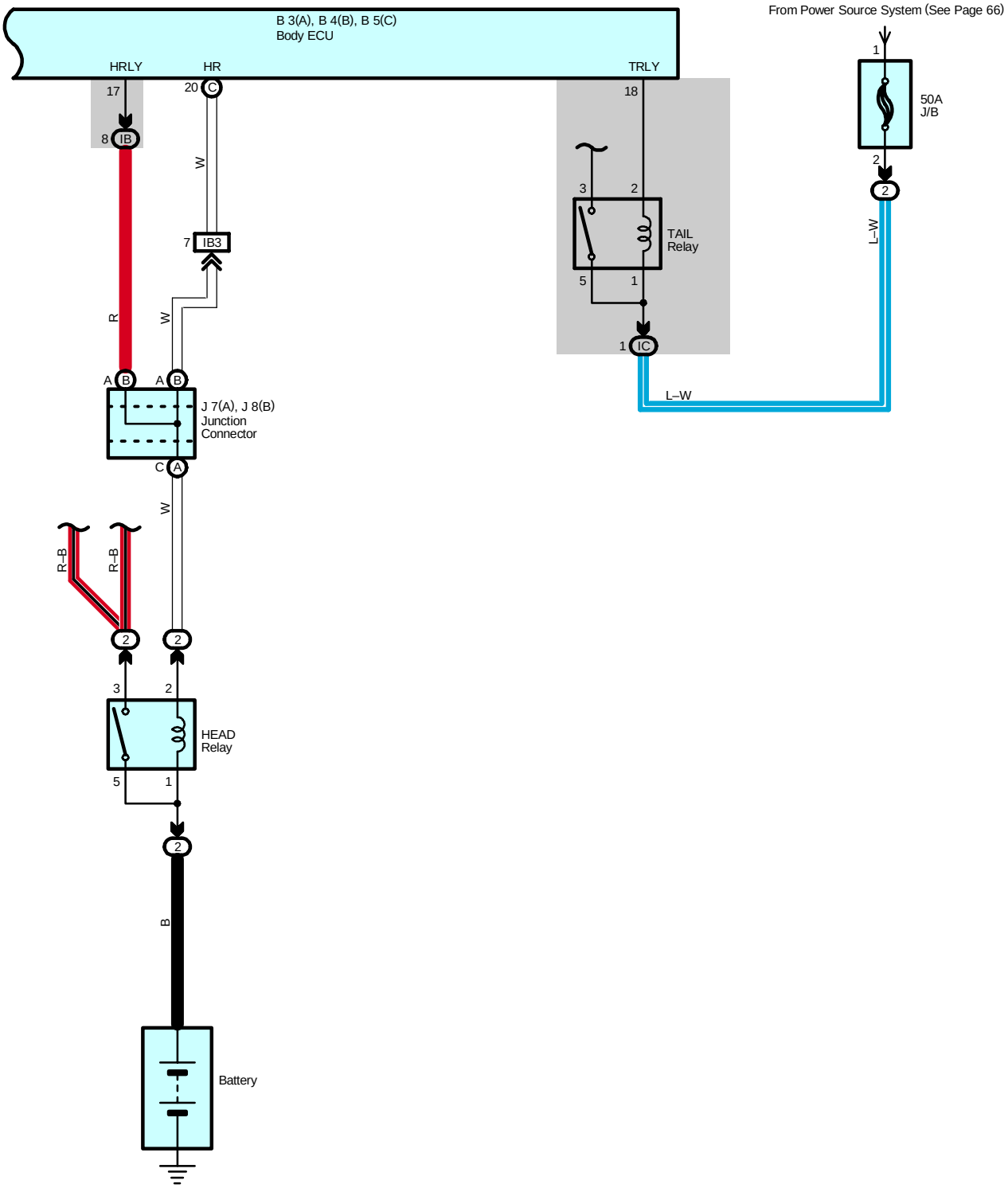
B 3(A), B 4(B), B 5(C)
Body ECU
HRLY
HR
TRLY
17
20
C
18
8
IB
W
7
IB3
R
W
A
B
A
B
J 7(A), J 8(B)
Junction
Connector
C
A
W
R–B
R–B
2
2
3
2
HEAD
Relay
5
1
2
B
Battery
3
2
TAIL
Relay
5
1
1
IC
L–W
From Power Source System (See Page 66)
1
50A
J/B
2
2
L–W

Wireless Door Lock Control

System Outline

Door lock control (Lock and unlock) and panic control (Theft alarm and flash) is performed by remote control, without the ignition key inserted in the door key cylinder, using low–power electrical waves emitted by a transmitter.

1. Normal Operation

∗ Lock operation
When the lock SW on the transmitter is pressed, all the doors are locked.

∗ Unlock operation
When the unlock SW on the transmitter is pressed once, only the driver door is unlocked. When the unlock SW is pressed again within 3 seconds, all the doors are unlocked.

2. Auto Lock Function

When the door is not actually opened within 30 seconds after the door has been unlocked by the unlock SW on the transmitter, all the doors are automatically locked. If any of the following conditions are detected, the wireless door lock does not function.

∗ Any door is opened.
∗ The ignition key is inserted into the ignition SW.
∗ When the lock detection SW of all the doors are locked.

3. Wireless Door Lock Stop Function

If any of the following conditions are detected, the wireless door lock does not function.
Lock operation
∗ When any door is open (Door courtesy SW on)
∗ The ignition key is inserted into the ignition SW (Unlock warning SW on)
∗ Ignition SW is on
Unlock operation
∗ Ignition SW is on

4. Buzzer Sound Function

During lock operation, when the body ECU receives a lock signal from the door lock detection SW, the wireless door lock buzzer goes on once. During unlock operation, when the body ECU receives an unlock signal from the door lock detection SW, the wireless door lock buzzer goes on twice.
With any door open, when the body ECU receives a lock signal from the transmitter, the wireless door lock buzzer goes on for approx. 10 seconds. If the door is closed, or ignition SW is on, or if the unlock signal is received from the transmitter while the buzzer is on, the buzzer stops.

5. Visual Confirmation of Lock or Unlock

During lock operation, when the body ECU receives a lock signal from the door lock detection SW, the turn signal light is flashed once. During unlock operation, when the body ECU receives an unlock signal from the door lock detection SW, the turn signal light is flashed twice.

6. Remote Panic Operation

Panic will function when doors are locked or unlocked, open or closed. When the panic button (Transmitter) is pushed once, interior lights light up, and theft alarm and horn sounds and turn signal light, headlights and taillight flash. Then, the panic or the unlock button (Transmitter) is pushed once more, interior lights are turned off, sounding and flashing will stop. Panic will not function when ignition key is in ignition key cylinder.

7. Repeat Function

If the lock detection signal in response to the output signal is not received after the body ECU has output the lock signal, the lock signal is output again.

8. Illuminated Entry Function

When the body ECU detects the unlock state after the unlock operation has been made, it turns on the lights, such as the ignition key cylinder light and interior light for approx. 15 sec. If all the doors are locked during this operation, lighting is cancelled and the lights immediately fade out.

Service Hints

Body ECU

11, 12–Ground : Always approx. 12 volts
10–Ground : Approx. 12 volts with the ignition SW at ON position
22–Ground : Approx. 12 volts with the ignition SW at ACC or ON position
4, 16–Ground : Always continuity

D7 Door Control Receiver

5–Ground : Always approx. 12 volts
1–Ground : Always continuity

: Parts Location

Code		See Page	Code		See Page	Code	See Page
B3	A	38	D17		42	J19	40
B4	B	38	D18		42	J23	40
B5	C	38	D19		42	J28	43
B6		42	D20		42	J29	43
B7		42	D21		42	J30	43
D7		42	J7	A	40	J31	43
D12		42	J8	B	40	J32	43
D13		42	J11		40	K3	40
D14		42	J13		40	S28	45
D15		42	J14		40	T10	41
D16		42	J16		40		

: Relay Blocks

Code	See Page	Relay Blocks (Relay Block Location)
2	22	Engine Room R/B (Engine Compartment Left)

: Junction Block and Wire Harness Connector

Code	See Page	Junction Block and Wire Harness (Connector Location)
IB	26	Engine Room Main Wire and Driver Side J/B (Lower Finish Panel)
IC		
IE		
IH	27	Instrument Panel Wire and Driver Side J/B (Lower Finish Panel)
IJ		
IK		
IL		
1A	30	Instrument Panel Wire and J/B No.1 (Instrument Panel Reinforcement Left)
1B		
1C		
1D		
2A	32	Instrument Panel Wire and J/B No.2 (Instrument Panel Reinforcement Center)
2E		

: Connector Joining Wire Harness and Wire Harness

Code	See Page	Joining Wire Harness and Wire Harness (Connector Location)
IB3	50	Instrument Panel Wire and Engine Room Main Wire (Left Kick Panel)
IB4		
IC1	50	Front Door LH Wire and Instrument Panel Wire (Left Kick Panel)
IC2		
ID2	50	Instrument Panel Wire and Floor No.2 Wire (Left Kick Panel)
ID3		
IH1	52	Instrument Panel Wire and Instrument Panel Wire (Near the J/B No.1)
IQ1	56	Front Door RH Wire and Instrument Panel Wire (Right Kick Panel)
IQ2		
IR1	56	Instrument Panel Wire and Floor Wire (Right Kick Panel)
IR3		
BC1	58	Rear Door LH Wire and Instrument Panel Wire (Center Pillar LH)
BD1	58	Rear Door RH Wire and Instrument Panel Wire (Center Pillar RH)
BH1	60	Back Door No.1 Wire and Floor Wire (Right Quarter Panel Inner)

▽ : **Ground Points**

Code	See Page	Ground Points Location
IH	50	Left Kick Panel
IJ	50	Near the Right Side of Steering Column
IL	50	Right Kick Panel
BP	58	Left Quarter Panel Inner
BQ	58	Back Door Panel Center

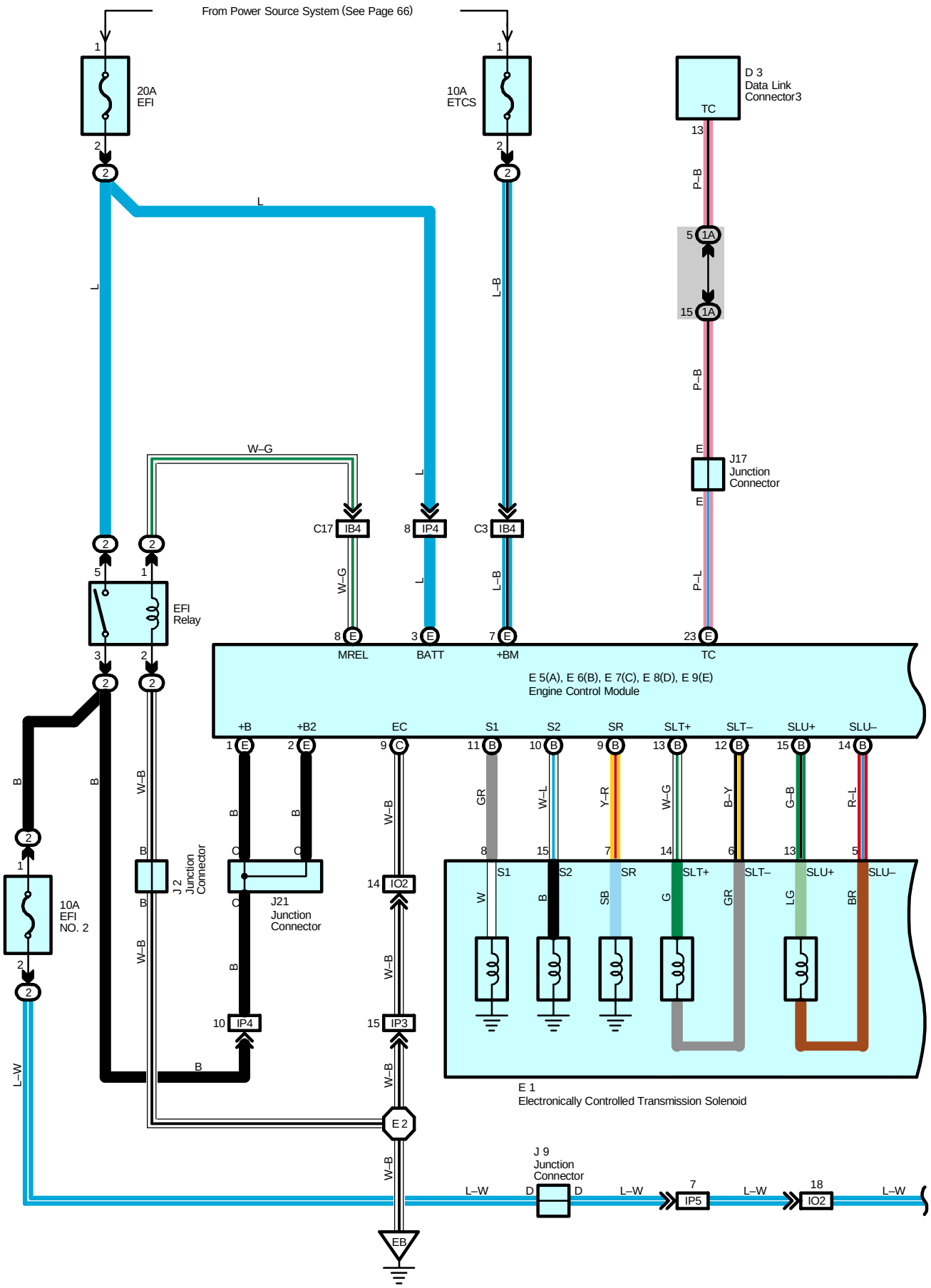
From Power Source System (See Page 66)
20A
EFI
10A
ETCS
D 3
Data Link
Connector3
TC
J17
Junction
Connector
EFI
Relay
C17 IB4
8 IP4
C3 IB4
MREL
BATT
+BM
TC
E 5(A), E 6(B), E 7(C), E 8(D), E 9(E)
Engine Control Module
+B
+B2
EC
S1
S2
SR
SLT+
SLT–
SLU+
SLU–
J 2
Junction
Connector
J21
Junction
Connector
10A
EFI
NO. 2
14 IO2
10 IP4
15 IP3
E 1
Electronically Controlled Transmission Solenoid
E 2
J 9
Junction
Connector
7
IP5
18
IO2
EB

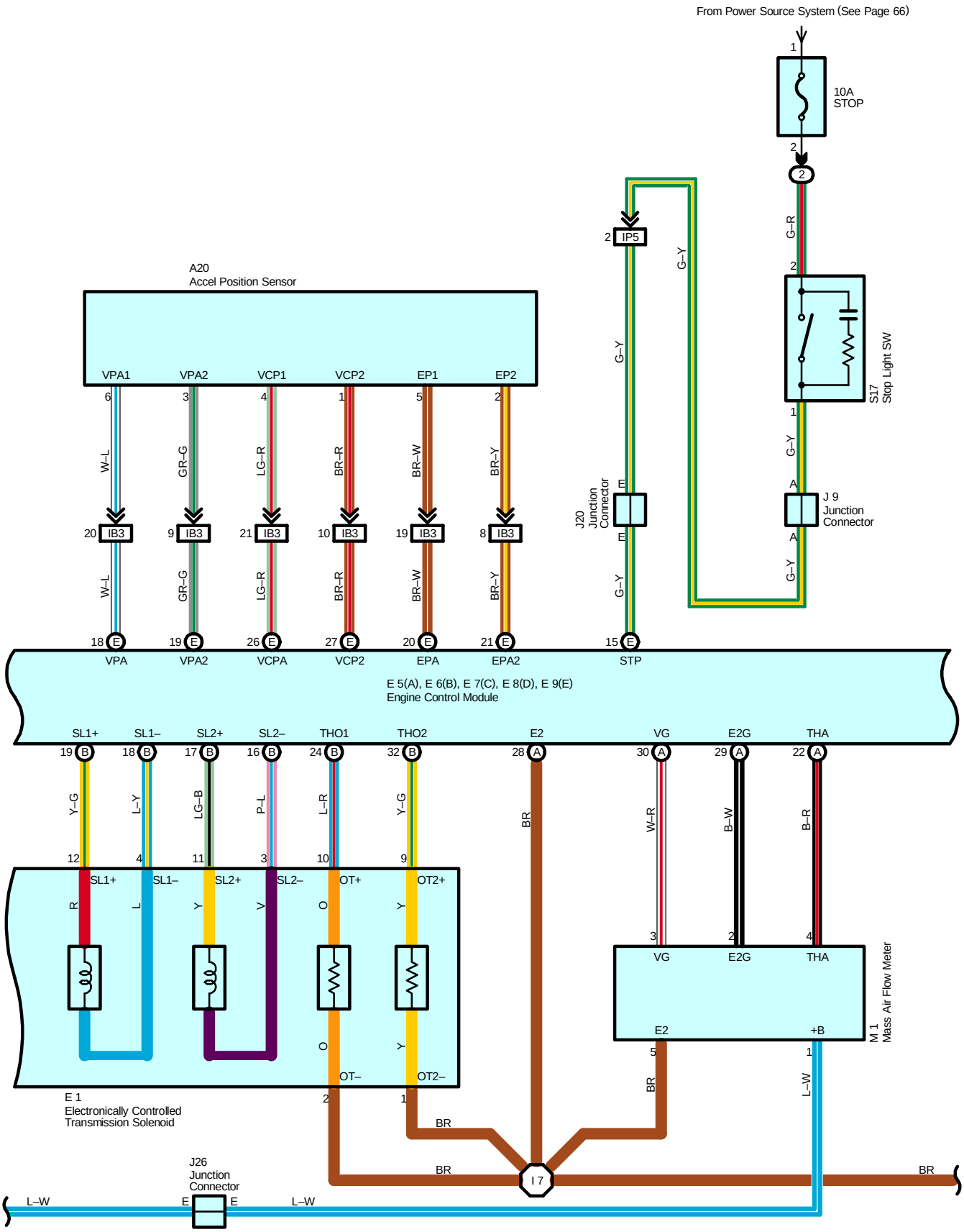
From Power Source System (See Page 66)
10A
STOP
A20
Accel Position Sensor
VPA1
VPA2
VCP1
VCP2
EP1
EP2
IB3
IP5
J20
Junction
Connector
J 9
Junction
Connector
S17
Stop Light SW
VPA
VPA2
VCPA
VCP2
EPA
EPA2
STP
E 5(A), E 6(B), E 7(C), E 8(D), E 9(E)
Engine Control Module
SL1+
SL1–
SL2+
SL2–
THO1
THO2
E2
VG
E2G
THA
OT+
OT2+
OT–
OT2–
E 1
Electronically Controlled
Transmission Solenoid
M 1
Mass Air Flow Meter
+B
I 7
J26
Junction
Connector
L–W
BR

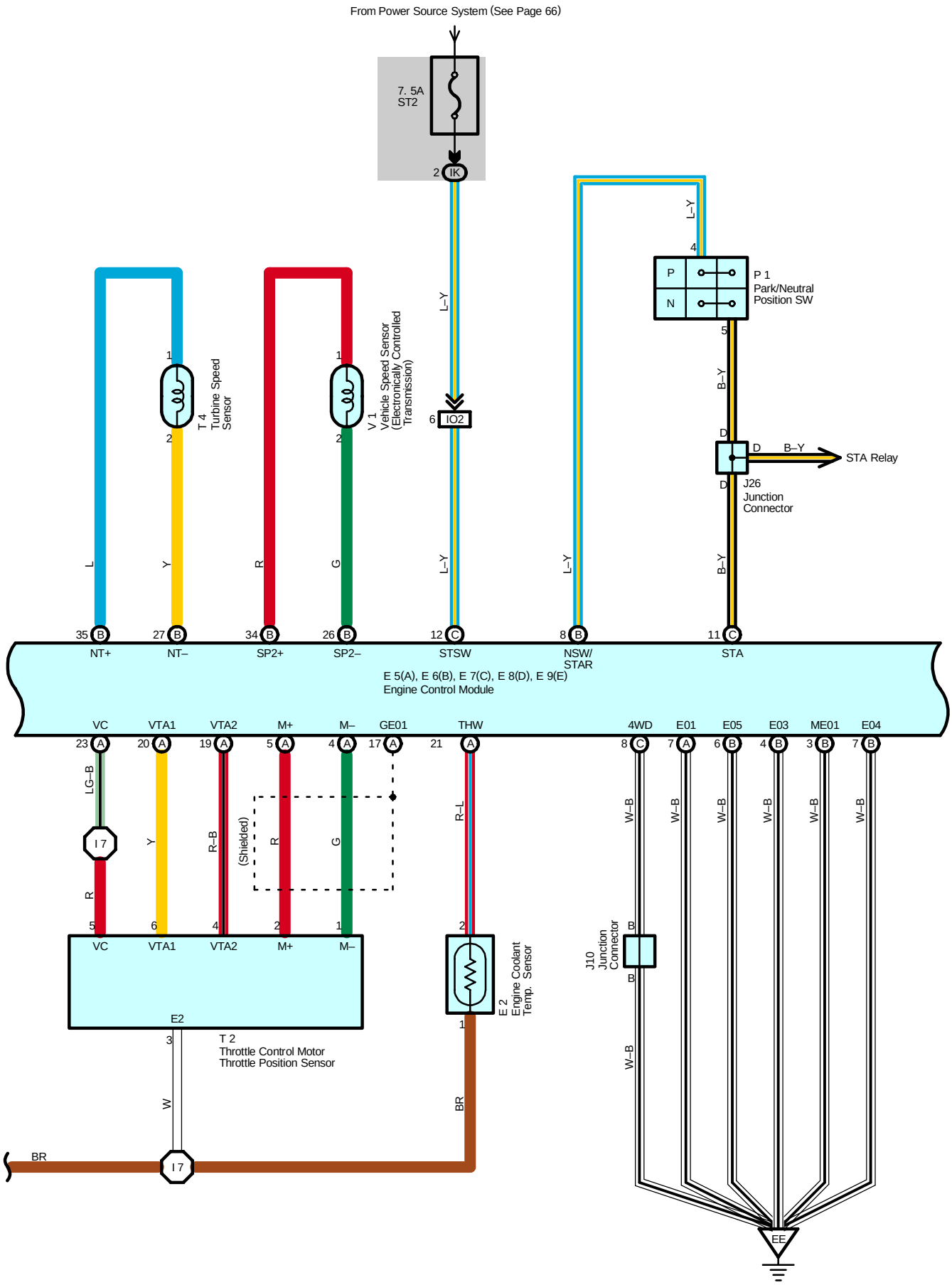
From Power Source System (See Page 66)
7. 5A
ST2
IK
IO2
P 1
Park/Neutral
Position SW
P
N
STA Relay
J26
Junction
Connector
T 4
Turbine Speed
Sensor
V 1
Vehicle Speed Sensor
(Electronically Controlled
Transmission)
NT+
NT–
SP2+
SP2–
STSW
NSW/
STAR
STA
E 5(A), E 6(B), E 7(C), E 8(D), E 9(E)
Engine Control Module
VC
VTA1
VTA2
M+
M–
GE01
THW
4WD
E01
E05
E03
ME01
E04
(Shielded)
I 7
E2
T 2
Throttle Control Motor
Throttle Position Sensor
E 2
Engine Coolant
Temp. Sensor
J10
Junction
Connector
EE

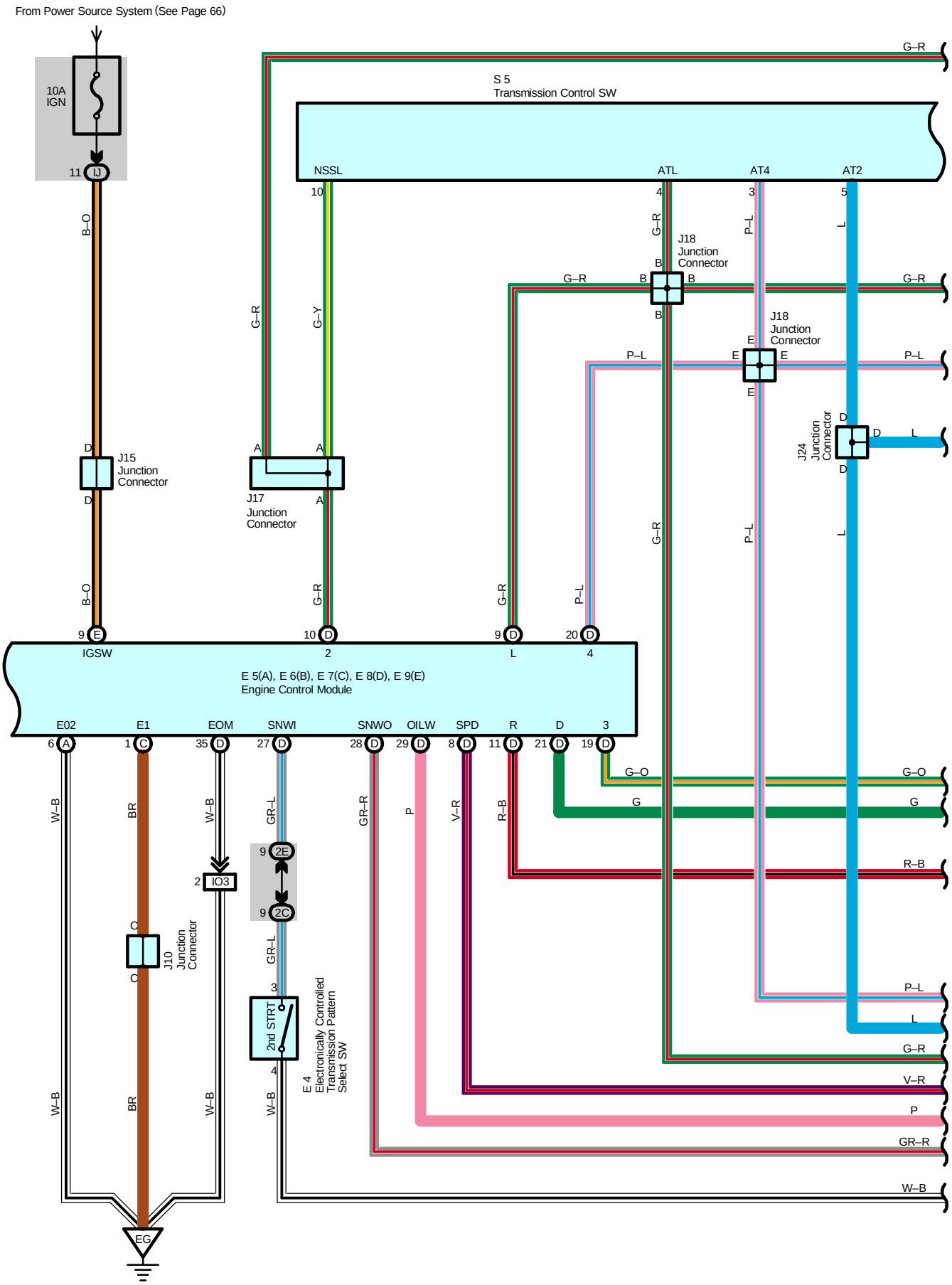
From Power Source System (See Page 66)
10A
IGN
11 IJ
B–O
D
J15
Junction
Connector
D
B–O
9 E
IGSW
G–R
S 5
Transmission Control SW
NSSL
ATL
AT4
AT2
10
4
3
5
G–R
P–L
L
J18
Junction
Connector
B
B
B
G–R
G–R
G–R
G–Y
A
A
J17
Junction
Connector
A
G–R
10 D
2
G–R
9 D
L
P–L
20 D
4
J18
Junction
Connector
E
E
E
P–L
P–L
J24
Junction
Connector
D
D
D
L
G–R
P–L
L
E 5(A), E 6(B), E 7(C), E 8(D), E 9(E)
Engine Control Module
E02
E1
EOM
SNWI
SNWO
OILW
SPD
R
D
3
6 A
1 C
35 D
27 D
28 D
29 D
8 D
11 D
21 D
19 D
G–O
G–O
G
G
W–B
BR
W–B
GR–L
GR–R
P
V–R
R–B
R–B
9 2E
2 IO3
9 2C
C
C
J10
Junction
Connector
GR–L
3
2nd STRT
4
E 4
Electronically Controlled
Transmission Pattern
Select SW
P–L
L
G–R
V–R
P
GR–R
W–B
W–B
BR
W–B
W–B
W–B
EG

ECT and A/T Indicator

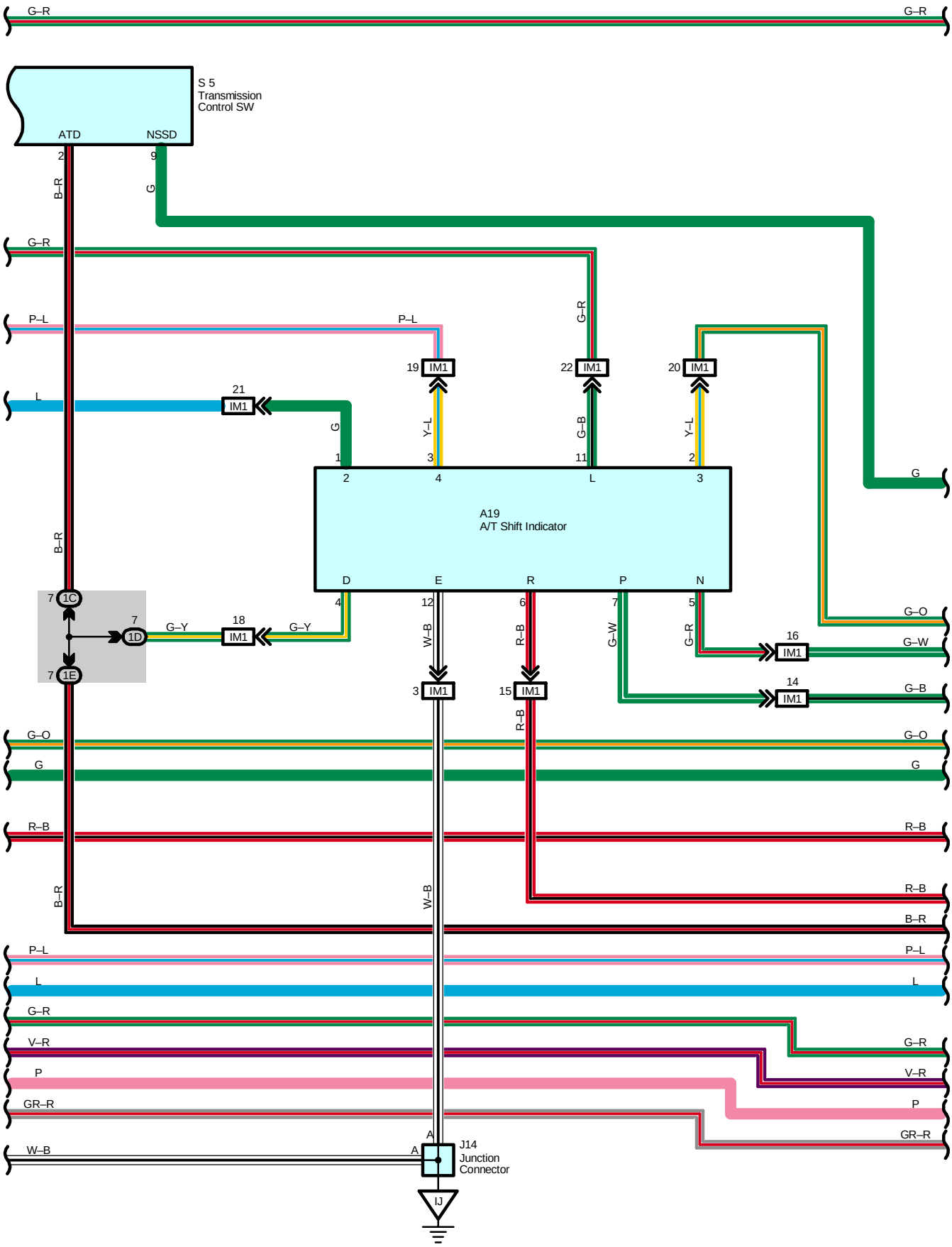

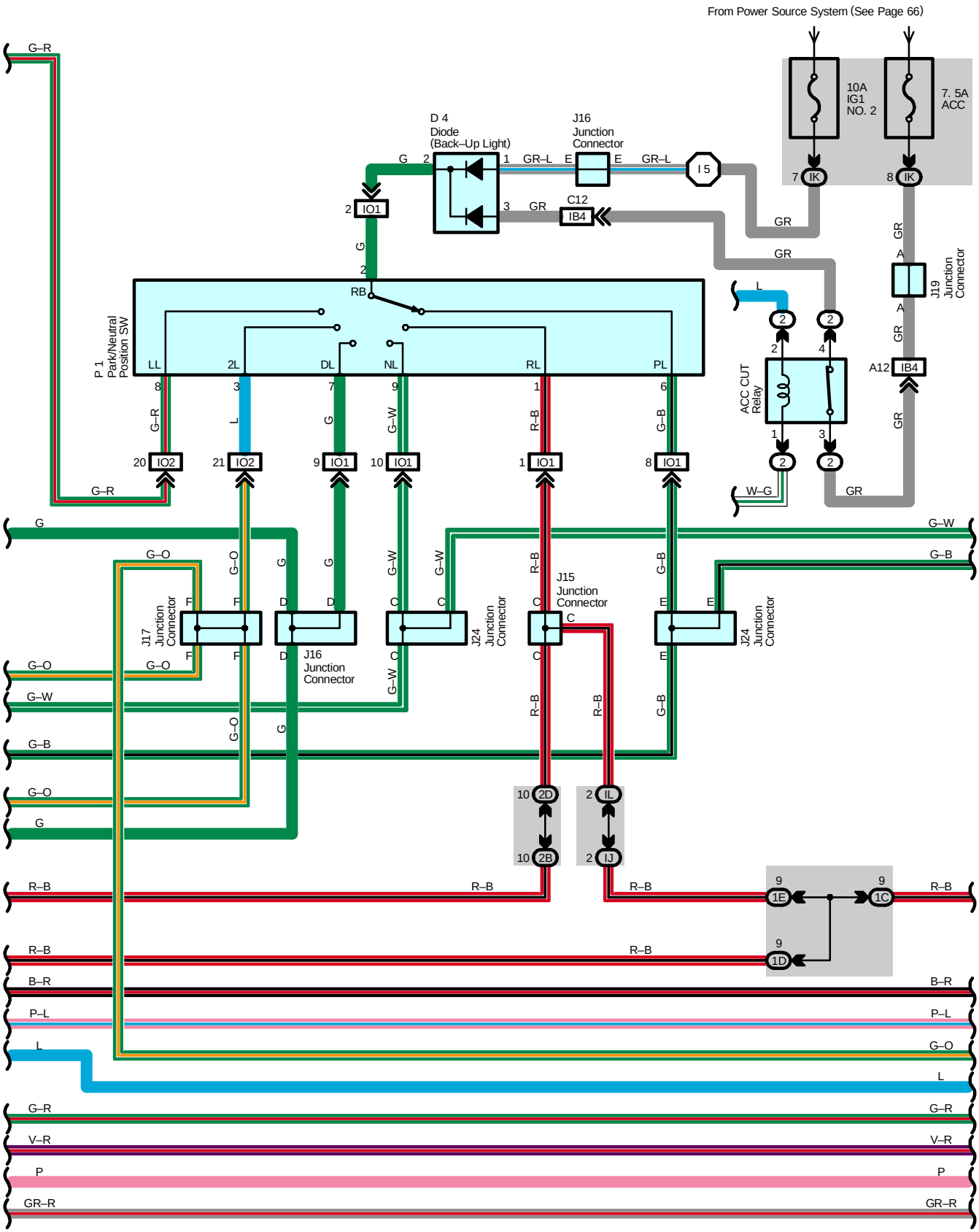
From Power Source System (See Page 66)
10A
IG1
NO. 2
7. 5A
ACC
D 4
Diode
(Back–Up Light)
J16
Junction
Connector
C12
IB4
I 5
IO1
IO2
IK
P 1
Park/Neutral
Position SW
LL
2L
DL
NL
RL
PL
RB
ACC CUT
Relay
J19
Junction
Connector
A12
J17
Junction
Connector
J24
Junction
Connector
J15
Junction
Connector
2D
2B
IL
IJ
1E
1C
1D
G–R
G
G–W
G–B
G–O
R–B
B–R
P–L
L
V–R
P
GR–R
GR
W–G

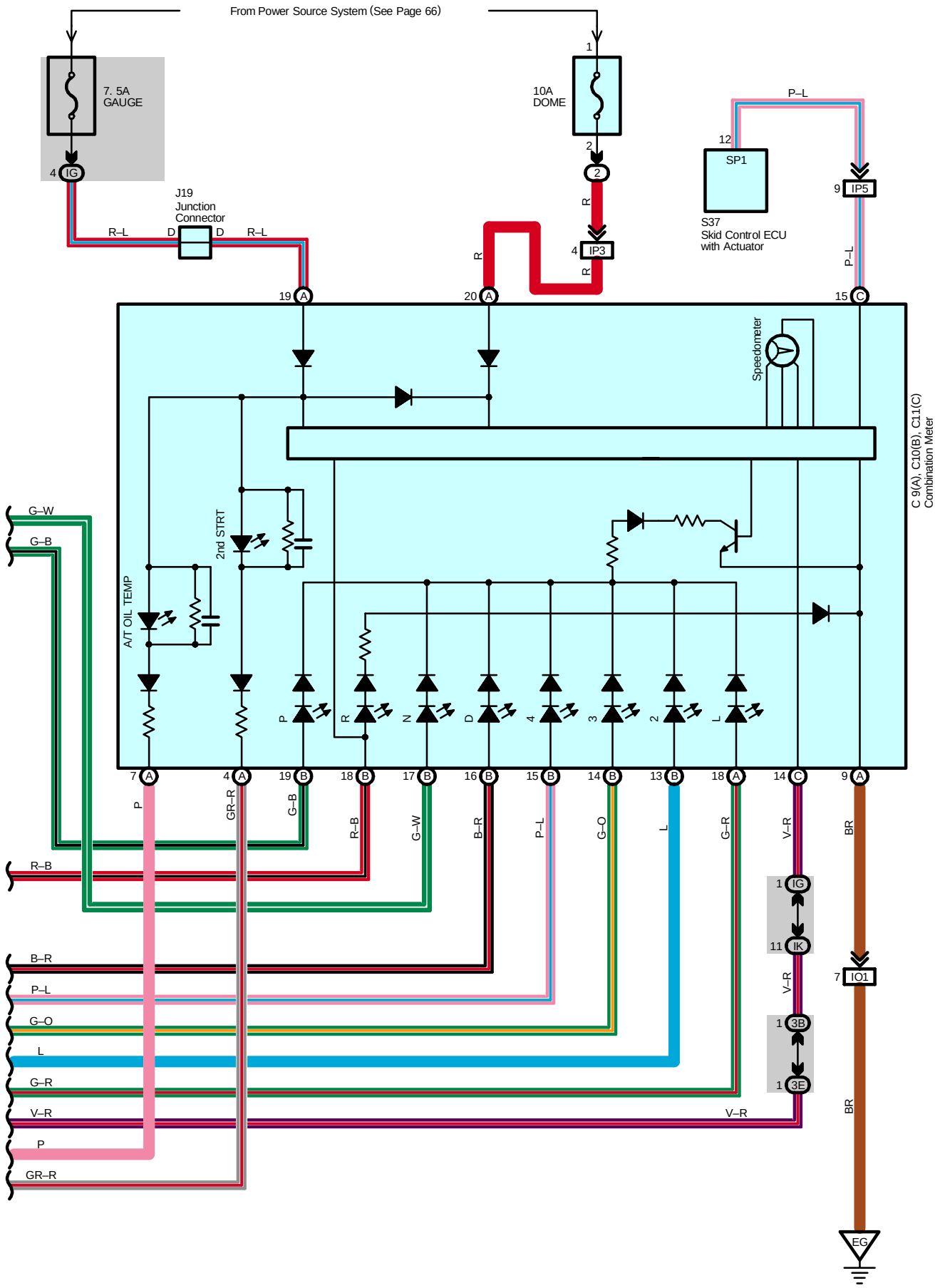
From Power Source System (See Page 66)
7. 5A
GAUGE
10A
DOME
J19
Junction
Connector
SP1
S37
Skid Control ECU
with Actuator
IP3
IP5
IQ1
IG
IK
3B
3E
EG
Speedometer
2nd STRT
A/T OIL TEMP
C 9(A), C10(B), C11(C)
Combination Meter
R–L
P–L
R
BR
G–W
G–B
R–B
B–R
G–O
L
G–R
V–R
P
GR–R

System Outline

Previous automatic transmissions have selected each gear shift using mechanically controlled throttle hydraulic pressure, governor hydraulic pressure and lock–up hydraulic pressure. The electronically controlled transmission, however, electrically controls the line pressure, throttle pressure, lock–up pressure and accumulator pressure etc. through the solenoid valve. The electronically controlled transmission is a system which precisely controls gear shift timing and lock–up timing in response to the vehicle's driving conditions and the engine condition detected by various sensors. It makes smooth driving possible by shift selection for each gear which is the most appropriate to the driving conditions at that time, and by preventing downing, squat and gear shift shock when starting off.

1. Gear Shift Operation

When driving, the engine warm up condition is input as a signal to TERMINAL THW of the engine control module from the engine coolant temp. sensor and the vehicle speed signal from vehicle speed sensor is input to TERMINAL SP2+ of the engine control module. At the same time, the throttle valve opening signal from the throttle position sensor is input to TERMINALS VTA1 and VTA2 of the engine control module as throttle angle signal.
Based on these signals, the engine control module selects the best shift position for the driving conditions and sends current to the electronically controlled transmission solenoid.

2. Line Hydraulic Pressure Control

The engine control module adjusts the line hydraulic pressure to the optimal level by controlling TERMINAL SLT+ of the module according to the engine torque data. This realizes the smooth gear shifting.

3. High Response Gear Shifting Control

The engine control module performs the high response engine torque up control to control the ignition–timing lag as well as opening the electronic throttle when shifting down. By doing this, the gear shifting is performed in a short period of time. Moreover, the engine control module uses the orifice switching control, which optimizes the speed of applying and reducing the hydraulic pressure. And it realizes the fine shifting condition by applying and reducing hydraulic pressure slowly when the gear shifting shock is important and quickly when the high response is required.

4. Clutch Hydraulic Pressure Control

The engine control module controls the clutch operation in the optimal timing and with the best hydraulic pressure according to the engine torque data and the number of the clutch revolution

5. Lock–Up and Flexible Lock–Up Control

The engine control module carries out the lock–up control by controlling the TERMINAL SLU+ of the module according to the shift position, vehicle speed, throttle opening degree and running conditions. The engine control module also steadily keeps applying the lock–up clutch a delicate slippage to improve the transmission efficiency (Fuel efficiency) of the torque converter.

6. Stop Light SW Circuit

If the brake pedal is depressed (Stop light SW on) when driving in lock–up condition, a signal is input to TERMINAL STP of the engine control module. The engine control module operates and cuts the current to the solenoid to release lock–up.

7. AI–Shift Control

The engine control module judges whether the road is downslope or upslope by detecting the throttle opening degree or the vehicle's speed. Moreover it can expect the winding roads by detecting the turning condition of the vehicle. The engine control module keeps unnecessary shifting up from the fourth gear from operating and carries out the automatic shifting down to the third gear in order to control the vehicle running according to the road conditions. The engine control module also reads the driver's intention during driving from his (her) accelerating operation and the running conditions of the vehicle. As a result of that, ideal shifting patters for each driver are automatically selected without any switching operations.

Service Hints

E5 (A), E7 (C), E8 (D), E9 (E) Engine Control Module

(E) 9–Ground : Approx. 12 volts with the ignition SW at ON position
(E) 7, (E) 3–Ground : Always approx. 12 volts
(C)12–Ground : Approx. 12 volts with the ignition SW at ST position
(E)15–Ground : Approx. 12 volts with the brake pedal depressed
(A) 6, (A) 7, (B) 3, (B) 4, (B) 6, (B) 7, (C) 1, (C) 8, (C) 9, (D) 35–Ground : Always continuity

P1 Park/Neutral Position SW

2–6 : Closed with the shift lever in P position
2–1 : Closed with the shift lever in R position
2–9 : Closed with the shift lever in N position
2–7 : Closed with the shift lever in D position or 4 position
2–3 : Closed with the shift lever in 3 position
2–8 : Closed with the shift lever in 2 position or L position

ECT and A/T Indicator

: Parts Location

Code		See Page	Code		See Page	Code	See Page
A19		38	E7	C	39	J20	40
A20		38	E8	D	39	J21	40
C9	A	38	E9	E	39	J24	40
C10	B	38	J2		37	J26	40
C11	C	38	J9		40	M1	37
D3		39	J10		40	P1	37
D4		39	J14		40	S5	41
E1		36	J15		40	S17	41
E2		36	J16		40	S37	37
E4		39	J17		40	T2	37
E5	A	39	J18		40	T4	37
E6	B	39	J19		40	V1	37

: Relay Blocks

Code	See Page	Relay Blocks (Relay Block Location)
2	22	Engine Room R/B (Engine Compartment Left)

: Junction Block and Wire Harness Connector

Code	See Page	Junction Block and Wire Harness (Connector Location)
IG	27	Instrument Panel Wire and Driver Side J/B (Lower Finish Panel)
IJ		
IK		
IL		
1A	30	Instrument Panel Wire and J/B No.1 (Instrument Panel Reinforcement Left)
1C		
1D		
1E		
2B	32	Instrument Panel Wire and J/B No.2 (Instrument Panel Reinforcement Center)
2C		
2D		
2E		
3B	34	Instrument Panel Wire and J/B No.3 (Instrument Panel Reinforcement Right)
3E		

: Connector Joining Wire Harness and Wire Harness

Code	See Page	Joining Wire Harness and Wire Harness (Connector Location)
IB3	50	Instrument Panel Wire and Engine Room Main Wire (Left Kick Panel)
IB4		
IM1	54	Instrument Panel Wire and Switch Wire (Front Side of the Console Box)
IO1	54	Engine Wire and Instrument Panel Wire (Right Side of the Blower Unit)
IO2		
IO3		
IP3	54	Instrument Panel Wire and Engine Room Main Wire (Right Kick Panel)
IP4		
IP5		

: Ground Points

Code	See Page	Ground Points Location
EB	48	Front Left Fender
EE	48	Rear Bank of Left Cylinder Head
EG		
IJ	50	Near the Right Side of Steering Column

: **Splice Points**

Code	See Page	Wire Harness with Splice Points	Code	See Page	Wire Harness with Splice Points
E2	48	Engine Room Main Wire	I7	52	Engine Wire
I5	52	Instrument Panel Wire			

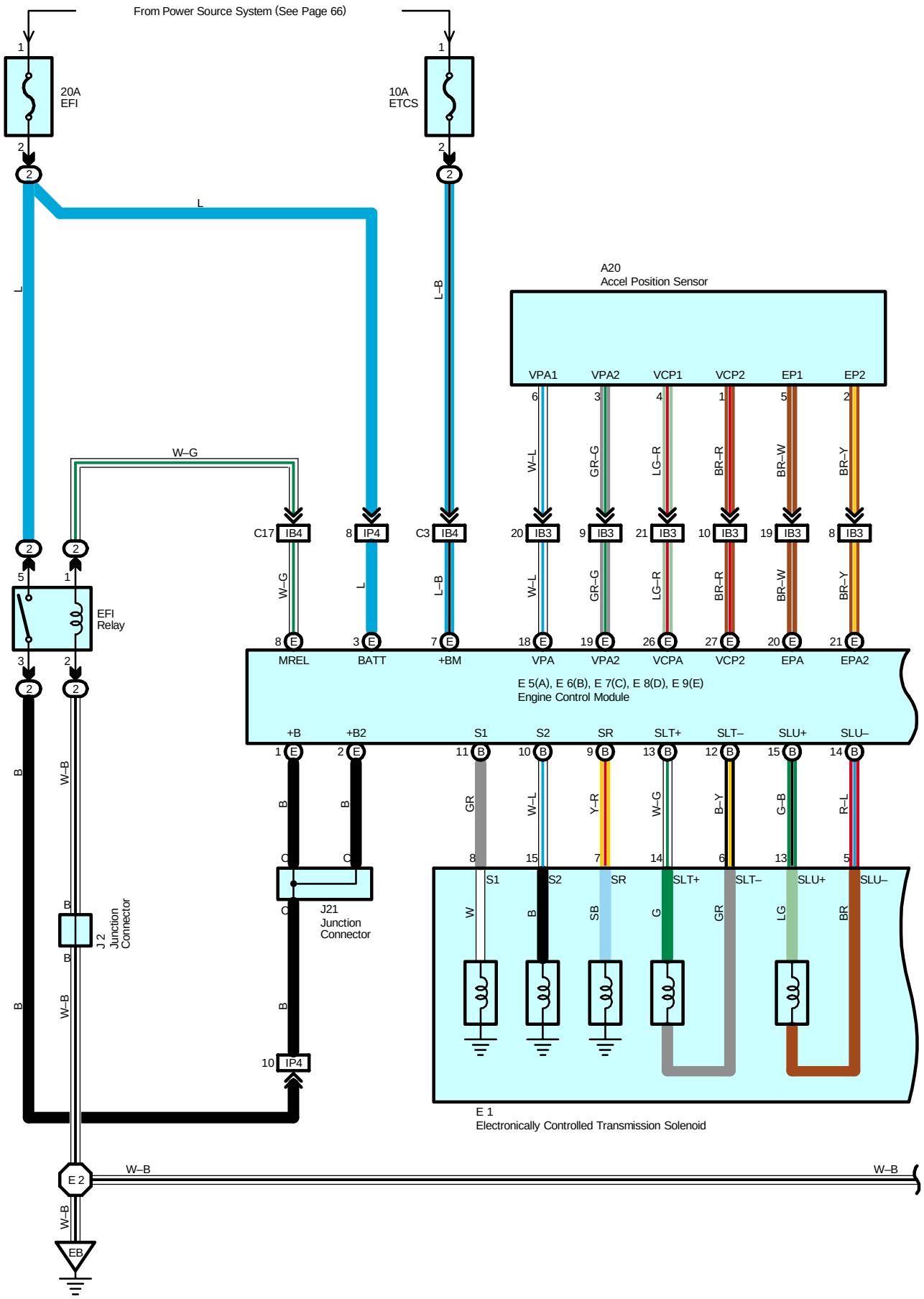
From Power Source System (See Page 66)
20A
EFI
10A
ETCS
A20
Accel Position Sensor
VPA1
VPA2
VCP1
VCP2
EP1
EP2
EFI
Relay
MREL
BATT
+BM
VPA
VPA2
VCPA
VCP2
EPA
EPA2
E 5(A), E 6(B), E 7(C), E 8(D), E 9(E)
Engine Control Module
+B
+B2
S1
S2
SR
SLT+
SLT–
SLU+
SLU–
J21
Junction
Connector
J 2
Junction
Connector
E 1
Electronically Controlled Transmission Solenoid
E 2
EB

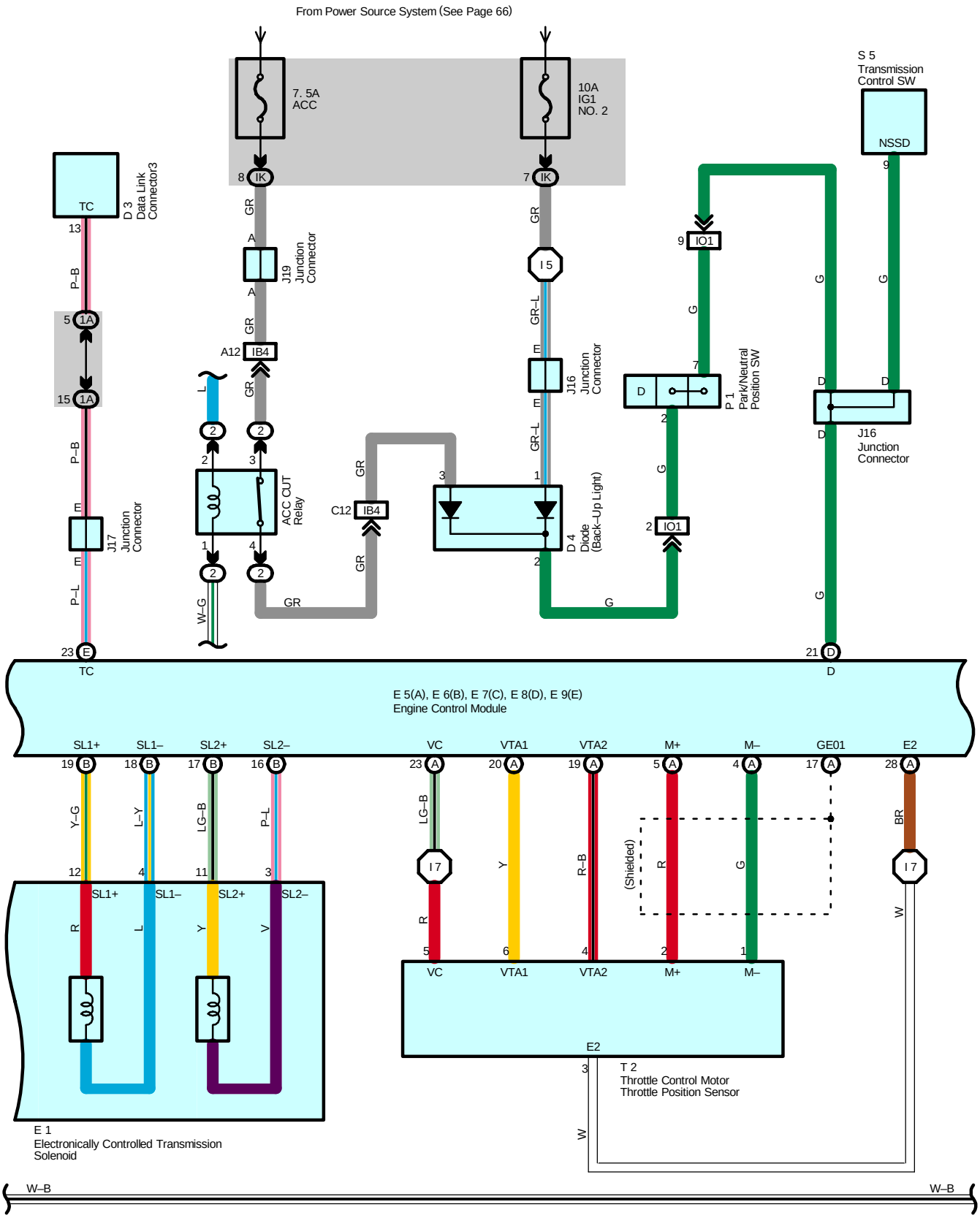
From Power Source System (See Page 66)
7. 5A
ACC
10A
IG1
NO. 2
S 5
Transmission
Control SW
NSSD
D 3
Data Link
Connector3
TC
J19
Junction
Connector
J16
Junction
Connector
P 1
Park/Neutral
Position SW
J17
Junction
Connector
ACC CUT
Relay
D 4
Diode
(Back–Up Light)
E 5(A), E 6(B), E 7(C), E 8(D), E 9(E)
Engine Control Module
SL1+
SL1–
SL2+
SL2–
VC
VTA1
VTA2
M+
M–
GE01
E2
(Shielded)
T 2
Throttle Control Motor
Throttle Position Sensor
E 1
Electronically Controlled Transmission
Solenoid
W–B

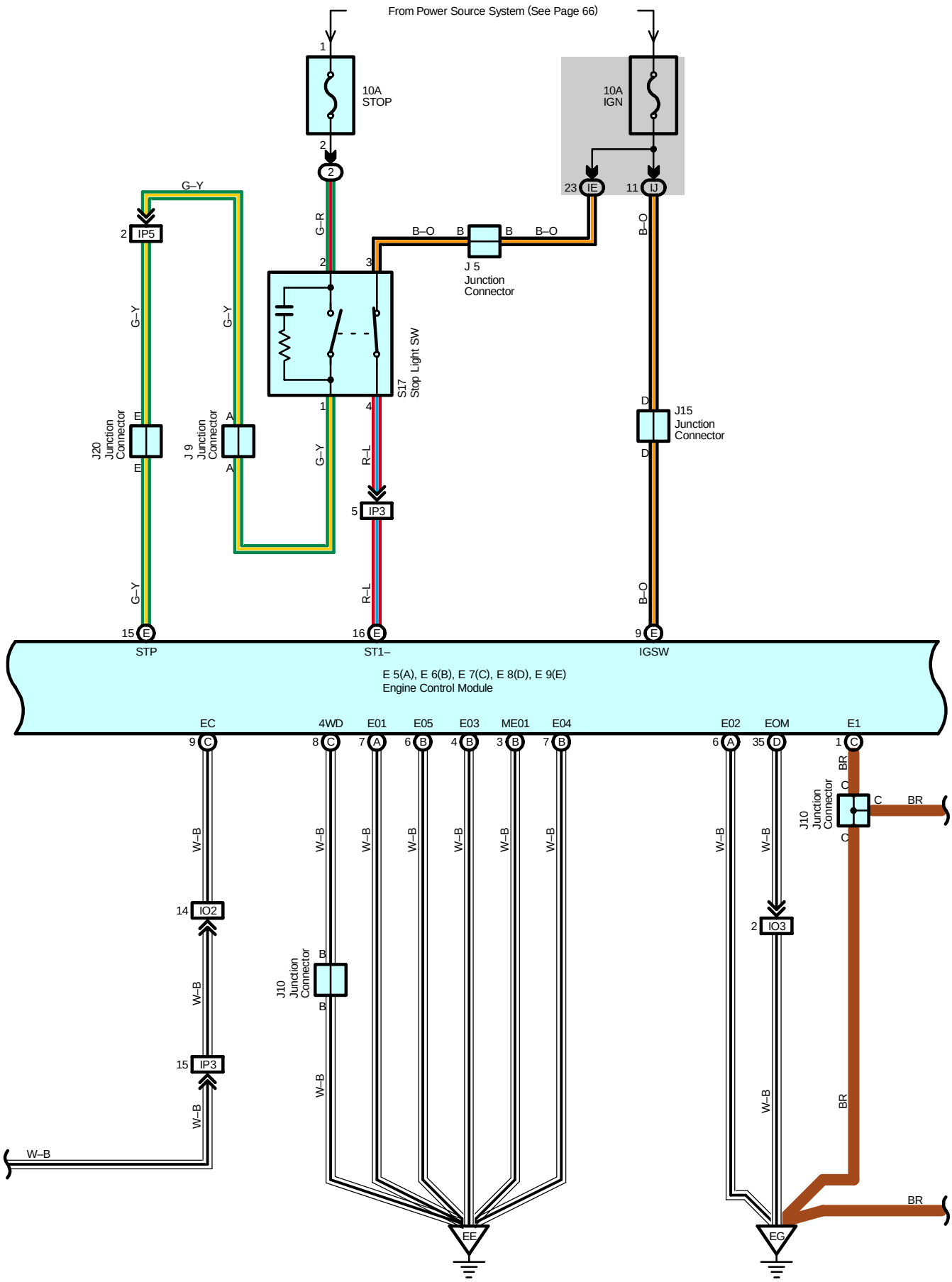
From Power Source System (See Page 66)
10A
STOP
10A
IGN
23 IE
11 IJ
G–Y
2 IP5
G–R
B–O
B
B
B–O
B–O
J 5
Junction
Connector
S17
Stop Light SW
G–Y
G–Y
J20
Junction
Connector
J 9
Junction
Connector
G–Y
R–L
5 IP3
J15
Junction
Connector
G–Y
R–L
B–O
15 E
STP
16 E
ST1–
9 E
IGSW
E 5(A), E 6(B), E 7(C), E 8(D), E 9(E)
Engine Control Module
EC
4WD
E01
E05
E03
ME01
E04
E02
EOM
E1
W–B
14 IO2
W–B
15 IP3
W–B
W–B
J10
Junction
Connector
W–B
W–B
W–B
W–B
W–B
W–B
W–B
2 IO3
W–B
BR
J10
Junction
Connector
BR
BR
BR
EE
EG

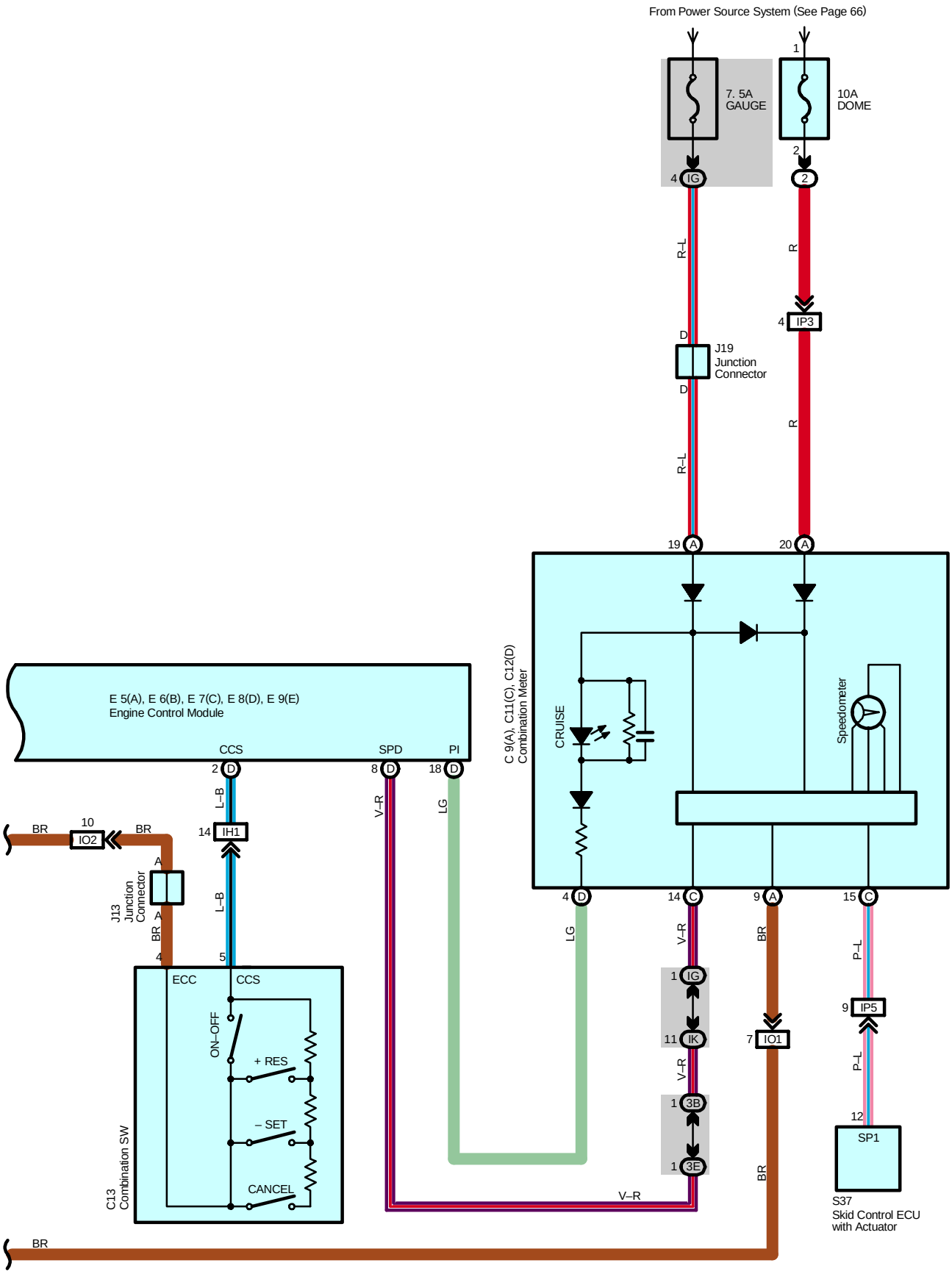
From Power Source System (See Page 66)
7. 5A
GAUGE
10A
DOME
1
2
4 IG
2
R–L
R
4 IP3
D
J19
Junction
Connector
D
R–L
R
19 A
20 A
C 9(A), C11(C), C12(D)
Combination Meter
CRUISE
Speedometer
E 5(A), E 6(B), E 7(C), E 8(D), E 9(E)
Engine Control Module
CCS
SPD
PI
2 D
8 D
18 D
L–B
V–R
LG
BR
10
IO2
BR
14 IH1
A
J13
Junction
Connector
A
L–B
BR
4
5
ECC
CCS
ON–OFF
+ RES
– SET
CANCEL
C13
Combination SW
4 D
14 C
9 A
15 C
LG
V–R
BR
P–L
1 IG
11 IK
7 IO1
9 IP5
V–R
P–L
1 3B
1 3E
12
SP1
BR
V–R
S37
Skid Control ECU
with Actuator
BR

System Outline

The cruise control system is a constant vehicle speed controller in which control of the switch on the instrument panel makes it possible to automatically adjust the opening of the engine throttle valve without depressing of the accel pedal.

1. Set Operation

When the ON–OFF SW is turned on, the system starts preparations necessary for the cruise control and turns on the indicator light in the combination meter.

2. Set Speed Control

When the – SET SW is operated with the cruise control main SW turned on during travelling, the constant vehicle speed is controlled.

3. Coast Control

When the – SET SW is kept turned on during cruise control travelling, the engine control module controls the throttle valve to decelerate the vehicle. Every time the – SET SW is turned on instantaneously, the vehicle speed is decelerated approximately 1.5 km/h.

4. Accel Control

When the + RES SW is kept turned on during cruise control travelling, the engine control module controls the throttle valve to accelerate the vehicle. Every time the + RES SW is turned on instantaneously, the vehicle speed is accelerated approximately 1.5 km/h.

5. Resume Control

When the vehicle speed is above the low speed limit (Approximately 40 km/h, 25 mph) if the cruise control is cancelled, use of the + RES SW accelerates the vehicle to the speed level used before canceling the cruise control.

6. Manual Cancel Mechanism

If any of the following signals is input during cruise control travelling, the cruise control is cancelled.

* The stop light SW is turned on.
* The CANCEL SW is turned on.
* The ON–OFF SW is turned off.
* Gear is shifted from D position to other position than D.

7. Auto Cancel Function

If any of the following conditions is encountered, the cruise control is automatically cancelled.

* The stop light SW wiring is faulty or short–circuited.
* The vehicle speed signal is faulty.
* The electronically controlled throttle malfunctions.

8. Overdrive Control Function

Overdrive is sometimes cut off on gradients during cruise control driving. When end of climbing gradient is determined by throttle opening degree information after overdrive is canceled, control is reset to overdrive condition after overdrive resetting timer operation. Also, when overdrive is cut off during accel or resume control, control is reset to overdrive condition when accel or resume control is finished.

Service Hints

E5 (A), E6 (B), E7 (C), E8 (D), E9 (E) Engine Control Module

(E) 9–Ground : Approx. 12 volts with the ignition SW at ON position
(E) 7, (E) 3–Ground : Always approx. 12 volts
(A) 6, (A) 7, (B) 3, (B) 4, (B) 6, (B) 7, (C) 1, (C) 8, (C) 9, (D) 35–Ground : Always continuity
(E)15–Ground : Approx. 12 volts with the brake pedal depressed
(D) 2–Ground : Continuity with the cruise control ON–OFF SW at on
Approx. 1540 Ω with the CANCEL SW on in cruise control SW
Approx. 240 Ω with the + RES SW on in cruise control SW
Approx. 630 Ω with the – SET SW on in cruise control SW

C13 Combination SW

5–4 : Approx. 1540 Ω with the CANCEL SW on
Approx. 240 Ω with the + RES SW on
Approx. 630 Ω with the – SET SW on

: Parts Location

Code		See Page	Code		See Page	Code	See Page
A20		38	E7	C	39	J17	40
C9	A	38	E8	D	39	J19	40
C11	C	38	E9	E	39	J20	40
C12	D	38	J2		37	J21	40
C13		38	J5		37	P1	37
D3		39	J9		40	S5	41
D4		39	J10		40	S17	41
E1		36	J13		40	S37	37
E5	A	39	J15		40	T2	37
E6	B	39	J16		40		

: Relay Blocks

Code	See Page	Relay Blocks (Relay Block Location)
2	22	Engine Room R/B (Engine Compartment Left)

: Junction Block and Wire Harness Connector

Code	See Page	Junction Block and Wire Harness (Connector Location)
IE	26	Engine Room Main Wire and Driver Side J/B (Lower Finish Panel)
IG	27	Instrument Panel Wire and Driver Side J/B (Lower Finish Panel)
IJ		
IK		
1A	30	Instrument Panel Wire and J/B No.1 (Instrument Panel Reinforcement Left)
3B	34	Instrument Panel Wire and J/B No.3 (Instrument Panel Reinforcement Right)
3E		

: Connector Joining Wire Harness and Wire Harness

Code	See Page	Joining Wire Harness and Wire Harness (Connector Location)
IB3	50	Instrument Panel Wire and Engine Room Main Wire (Left Kick Panel)
IB4		
IH1	52	Instrument Panel Wire and Instrument Panel Wire (Near the J/B No.1)
IO1	54	Engine Wire and Instrument Panel Wire (Right Side of the Blower Unit)
IO2		
IO3		
IP3	54	Instrument Panel Wire and Engine Room Main Wire (Right Kick Panel)
IP4		
IP5		

: Ground Points

Code	See Page	Ground Points Location
EB	48	Front Left Fender
EE	48	Rear Bank of Left Cylinder Head
EG		

: Splice Points

Code	See Page	Wire Harness with Splice Points	Code	See Page	Wire Harness with Splice Points
E2	48	Engine Room Main Wire	I7	52	Engine Wire
I5	52	Instrument Panel Wire			

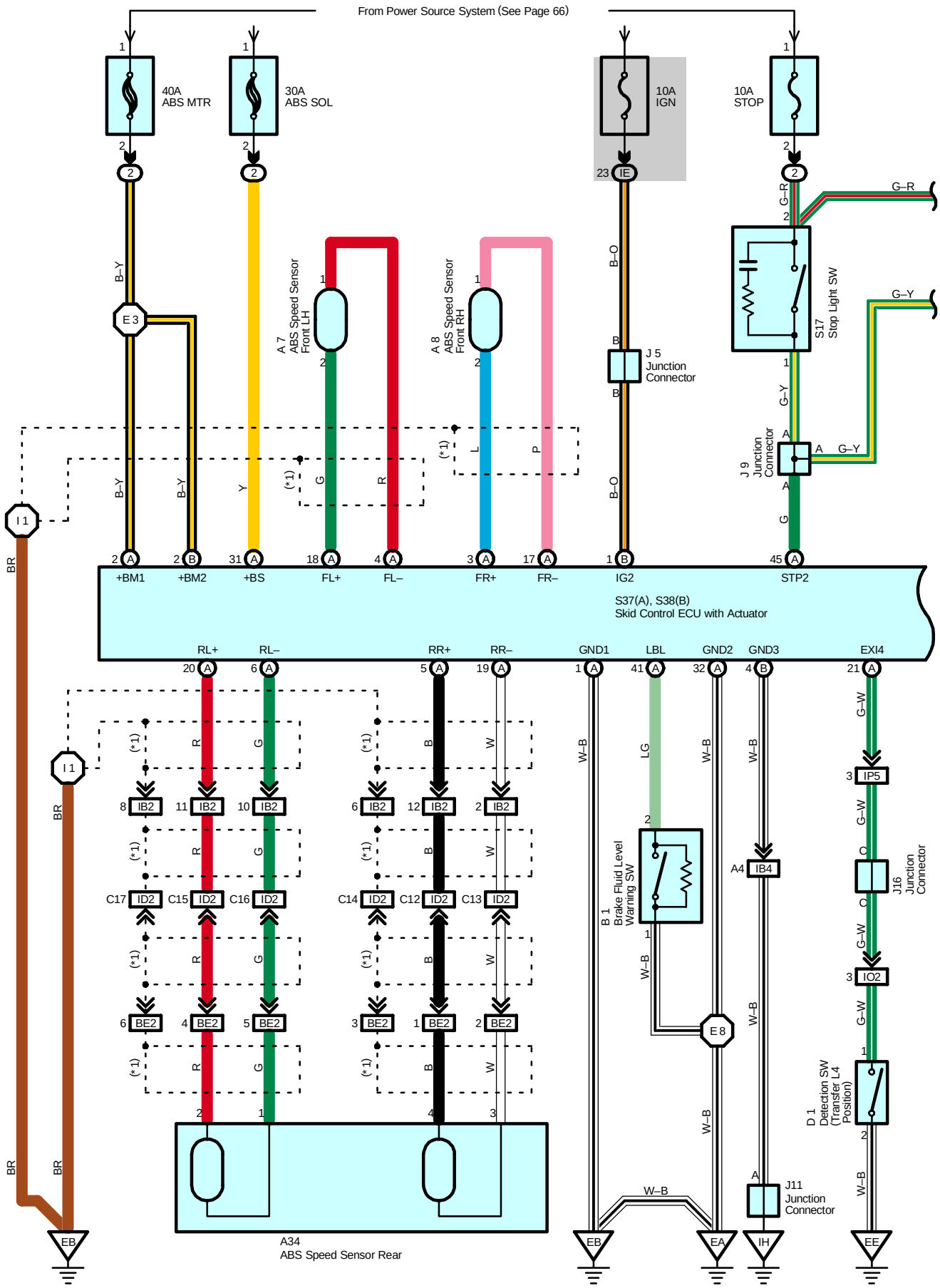
From Power Source System (See Page 66)
40A
ABS MTR
30A
ABS SOL
10A
IGN
10A
STOP
E 3
A 7
ABS Speed Sensor
Front LH
A 8
ABS Speed Sensor
Front RH
J 5
Junction
Connector
S17
Stop Light SW
J 9
Junction
Connector
I 1
+BM1
+BM2
+BS
FL+
FL–
FR+
FR–
IG2
STP2
S37(A), S38(B)
Skid Control ECU with Actuator
RL+
RL–
RR+
RR–
GND1
LBL
GND2
GND3
EXI4
B 1
Brake Fluid Level
Warning SW
E 8
A4
IB4
IP5
IO2
J16
Junction
Connector
D 1
Detection SW
(Transfer L4
Position)
J11
Junction
Connector
A34
ABS Speed Sensor Rear
EB
EA
IH
EE

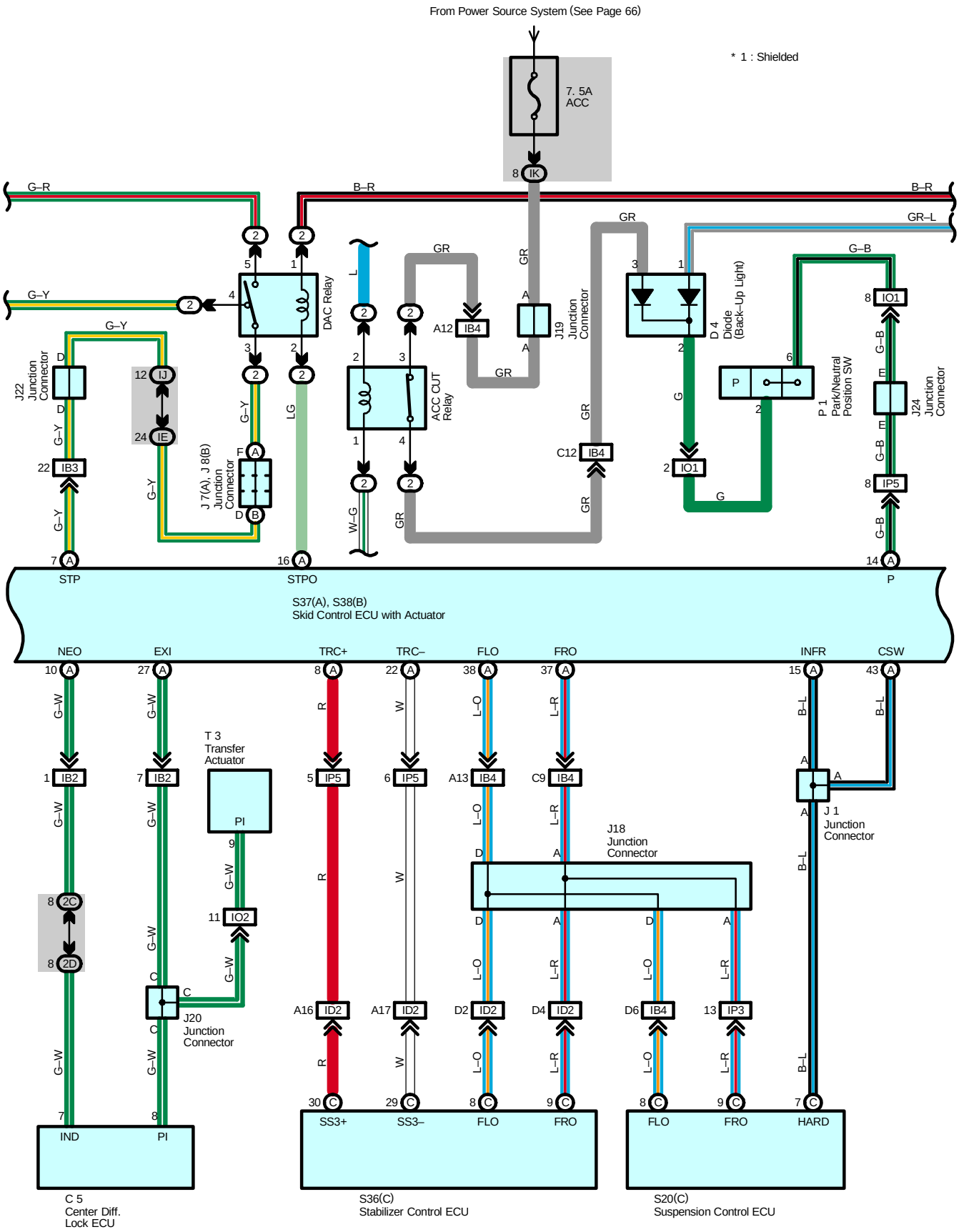
From Power Source System (See Page 66)
* 1 : Shielded
7. 5A
ACC
8 IK
G–R
B–R
B–R
GR–L
G–Y
G–Y
DAC Relay
ACC CUT Relay
J19 Junction Connector
D 4 Diode (Back–Up Light)
P 1 Park/Neutral Position SW
J24 Junction Connector
J22 Junction Connector
J 7(A), J 8(B) Junction Connector
A12 IB4
C12 IB4
22 IB3
12 IJ
24 IE
8 IO1
8 IP5
2 IO1
STP
STPO
P
S37(A), S38(B)
Skid Control ECU with Actuator
NEO
EXI
TRC+
TRC–
FLO
FRO
INFR
CSW
T 3
Transfer
Actuator
PI
11 IO2
J20
Junction
Connector
J18
Junction
Connector
J 1
Junction
Connector
5 IP5
6 IP5
A13 IB4
C9 IB4
1 IB2
7 IB2
8 2C
8 2D
A16 ID2
A17 ID2
D2 ID2
D4 ID2
D6 IB4
13 IP3
IND
PI
SS3+
SS3–
FLO
FRO
FLO
FRO
HARD
C 5
Center Diff.
Lock ECU
S36(C)
Stabilizer Control ECU
S20(C)
Suspension Control ECU

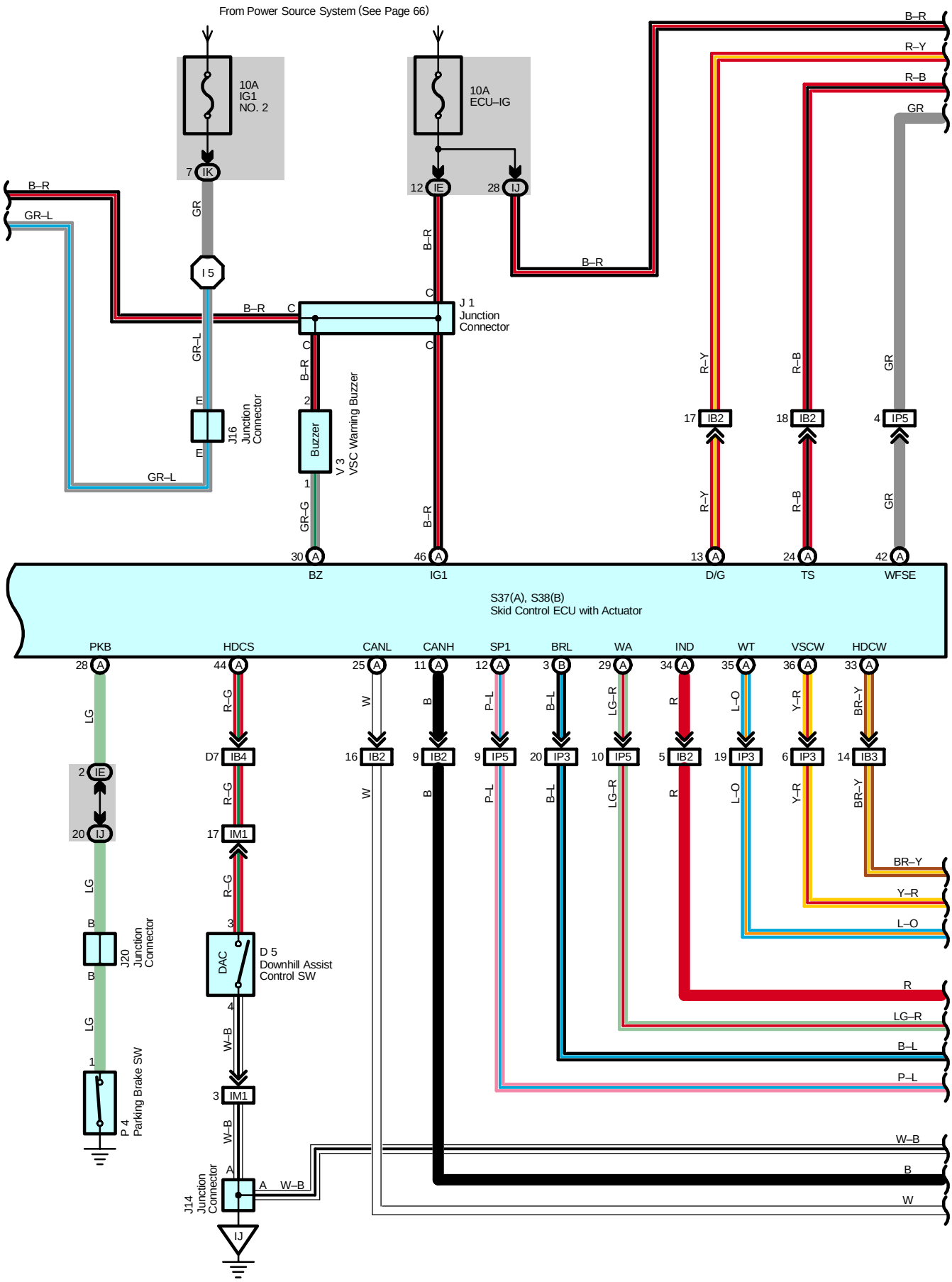
From Power Source System (See Page 66)
10A
IG1
NO. 2
10A
ECU–IG
7 IK
12 IE
28 IJ
B–R
GR–L
GR
I 5
B–R
C
J 1
Junction
Connector
GR–L
E
J16
Junction
Connector
GR–L
B–R
2
Buzzer
V 3
VSC Warning Buzzer
1
GR–G
30 A
BZ
46 A
IG1
R–Y
17 IB2
R–Y
13 A
D/G
R–B
18 IB2
R–B
24 A
TS
GR
4 IP5
GR
42 A
WFSE
S37(A), S38(B)
Skid Control ECU with Actuator
PKB
28 A
HDCS
44 A
CANL
25 A
CANH
11 A
SP1
12 A
BRL
3 B
WA
29 A
IND
34 A
WT
35 A
VSCW
36 A
HDCW
33 A
LG
2 IE
20 IJ
LG
B
J20
Junction
Connector
B
LG
1
P 4
Parking Brake SW
R–G
D7 IB4
R–G
17 IM1
R–G
3
DAC
D 5
Downhill Assist
Control SW
4
W–B
3 IM1
W–B
A
J14
Junction
Connector
A W–B
IJ
W
16 IB2
W
9 IB2
B
9 IP5
P–L
20 IP3
B–L
10 IP5
LG–R
5 IB2
R
19 IP3
L–O
6 IP3
Y–R
14 IB3
BR–Y
BR–Y
Y–R
L–O
R
LG–R
B–L
P–L
W–B
B
W

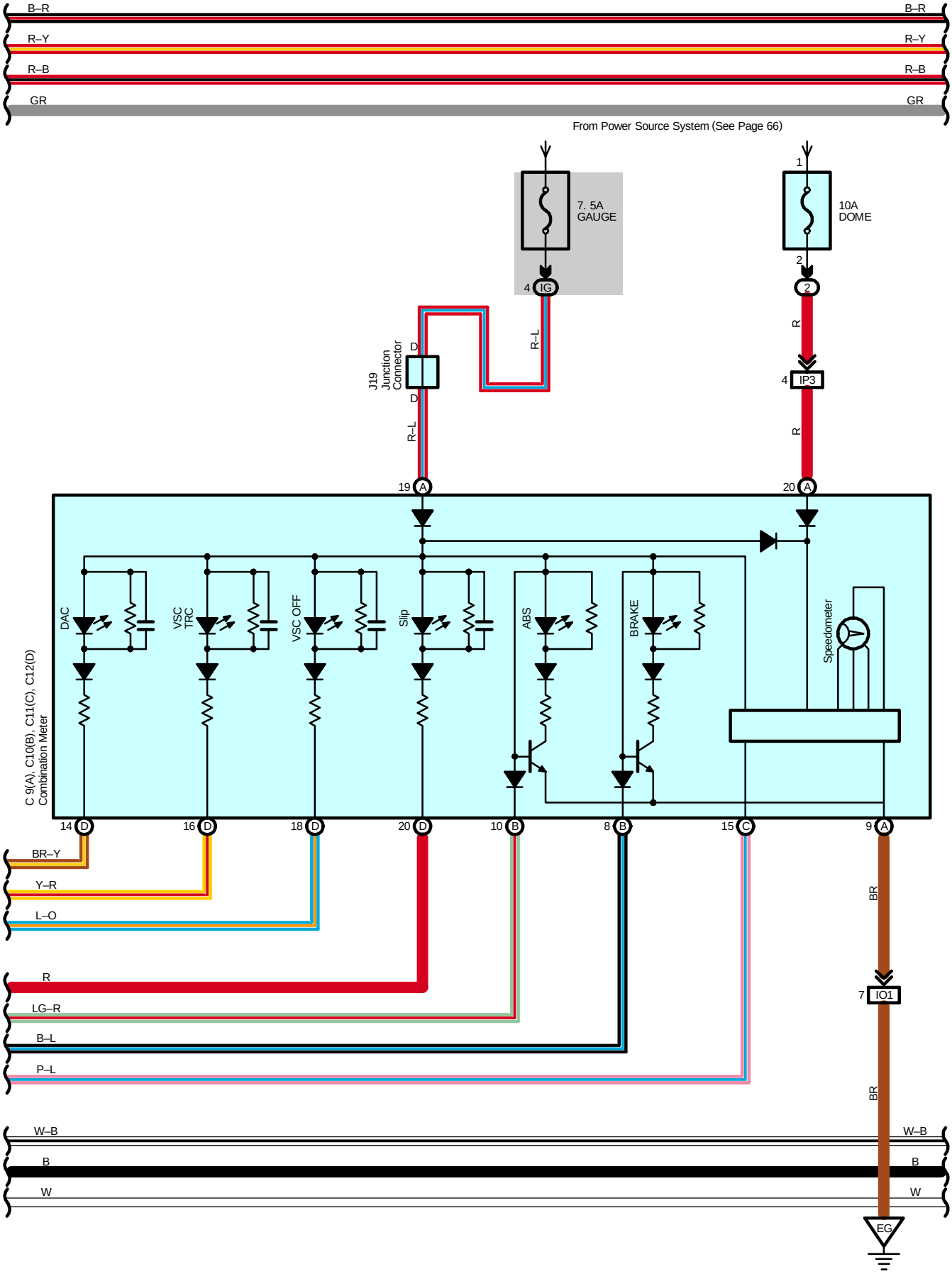
B–R
R–Y
R–B
GR
From Power Source System (See Page 66)
7. 5A
GAUGE
10A
DOME
IG
IP3
J19
Junction
Connector
R–L
R
C 9(A), C10(B), C11(C), C12(D)
Combination Meter
DAC
VSC
TRC
VSC OFF
Slip
ABS
BRAKE
Speedometer
BR–Y
Y–R
L–O
LG–R
B–L
P–L
BR
IO1
W–B
B
W
EG

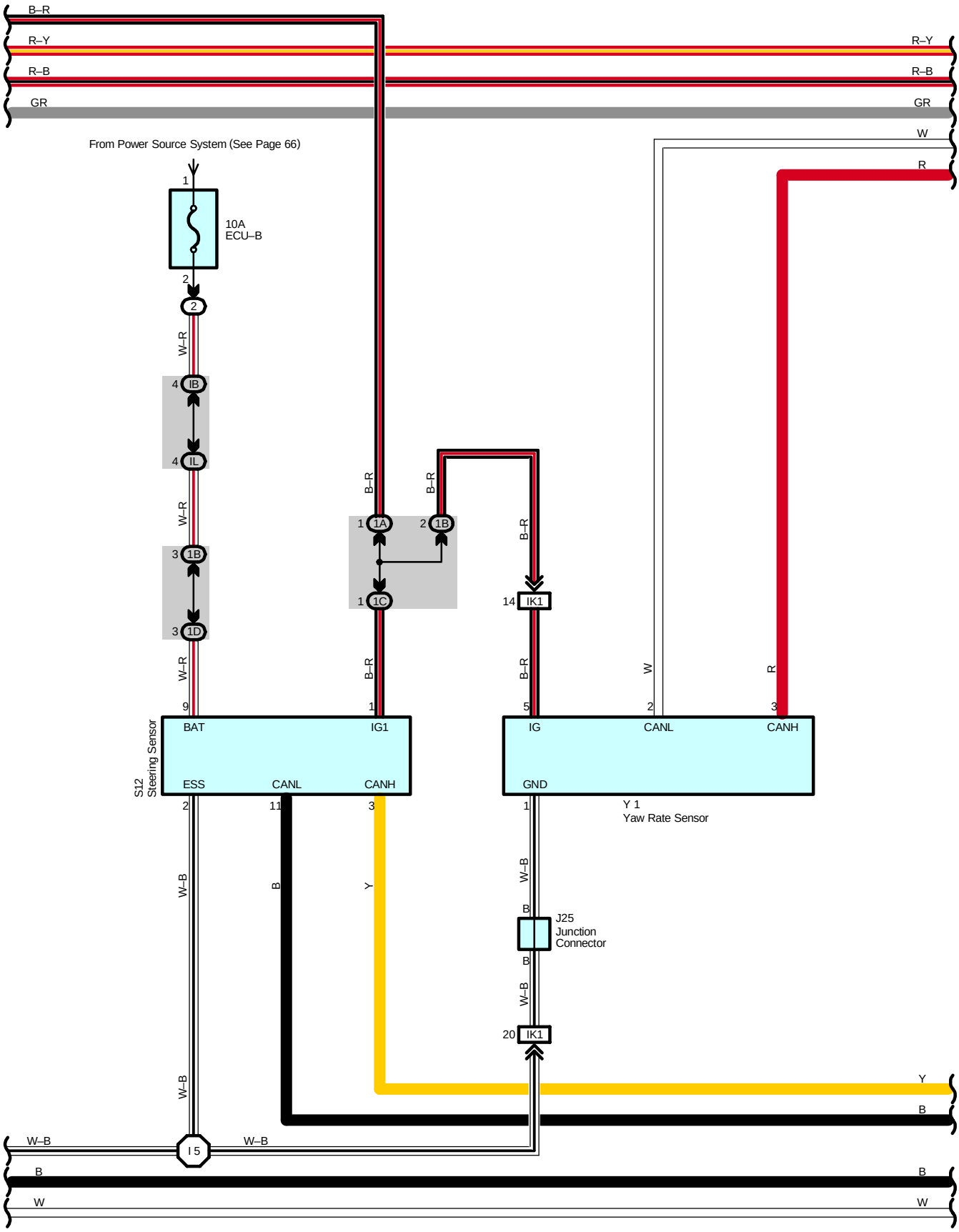
B–R
R–Y
R–B
GR
W
R
From Power Source System (See Page 66)
10A
ECU–B
W–R
IB
IL
1B
1D
1A
1C
IK1
BAT
IG1
ESS
CANL
CANH
IG
GND
S12
Steering Sensor
Y 1
Yaw Rate Sensor
W–B
B
Y
J25
Junction
Connector
I 5

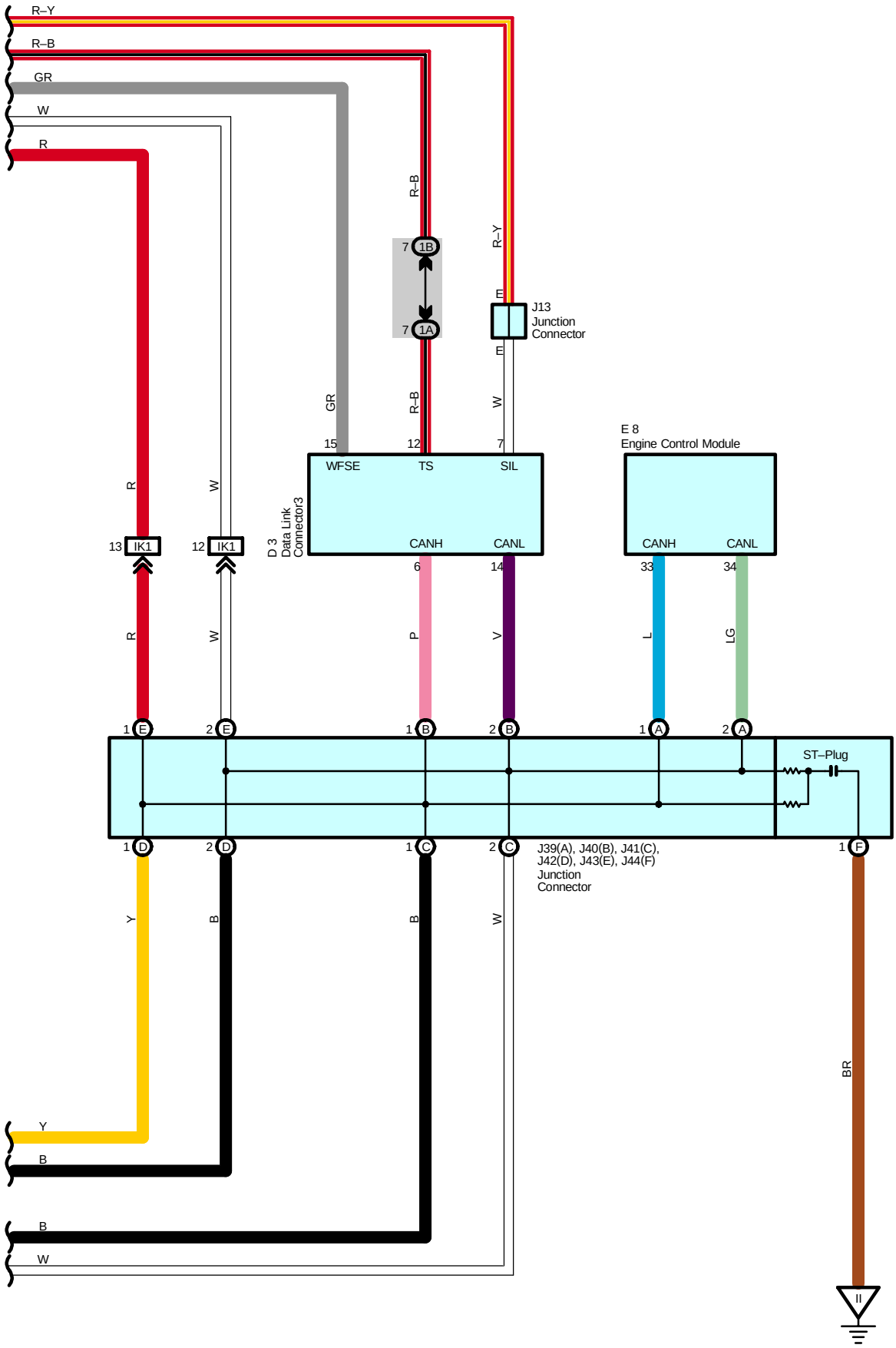
R–Y
R–B
GR
W
R
R–B
7 1B
7 1A
R–Y
E
J13
Junction
Connector
E
GR
R–B
W
15
12
7
E 8
Engine Control Module
WFSE
TS
SIL
D 3
Data Link
Connector3
CANH
CANL
CANH
CANL
6
14
33
34
R
W
13 IK1
12 IK1
R
W
P
V
L
LG
1 E
2 E
1 B
2 B
1 A
2 A
ST–Plug
1 D
2 D
1 C
2 C
1 F
J39(A), J40(B), J41(C),
J42(D), J43(E), J44(F)
Junction
Connector
Y
B
B
W
BR
Y
B
B
W
II

System Outline

1. Normal Operation

The VSC system helps prevent the vehicle from slipping sideways as a result of strong front wheel skid or strong rear wheel skid during cornering.
The followings are two examples that can be considered as circumstances in which the tires exceed their lateral grip limit. The VSC system is designed to help control the vehicle behavior by controlling the engine's output and the brakes at each wheel when the vehicle is under one of the conditions indicated below.

∗ When the front wheels lose grip in relation to the rear wheels (Strong front wheel skid tendency).
∗ When the rear wheels lose grip in relation to the front wheels (Strong rear wheel skid tendency).

2. Downhill Assist Control Operation

The downhill assist control operation controls braking action of each wheel to help prevent out–of–balance vehicle posture when descending a steep hill or traveling at a speed exceeding the threshold of wheel gripping capability. When the downhill assist control is in operation, the brake system controls vehicle speed within the range of 5 to 7 km/h.
For the downhill assist control to be operative all of the following conditions have to be met:

∗ Downhill assist control switch = ON
∗ Transfer L4 selected
∗ Vehicle speed is 5 km/h or more, but less than 25 km/h.
∗ Accelerator pedal OFF
∗ Brake pedal OFF

3. Hill–Start Assist Control Operation

When starting on a steep hill for ascending, the hill–start support control automatically puts the brake on momentarily – from the moment when the driver releases his foot from the brake pedal until he steps on the accelerator pedal – to help the driver start the vehicle safely and smoothly.
Please bear in mind, however, that it activates the brake system for only 3 seconds.
For the hill–start support control to be operative all of the following conditions have to be met:

∗ Shift position = D, 2, or L
∗ Vehicle not moving forward with some wheel(s) slipping
∗ Vehicle speed > 0 km/h

Service Hints

S37 (A), S38 (B) Skid Control ECU with Actuator

(A) 1, (A) 32, (B) 4–Ground : Always continuity
(A) 46, (B) 1–Ground : Approx. 12 volts with the ignition SW at ON position
(A) 2, (B) 2–Ground : Always approx. 12 volts

: Parts Location

Code		See Page	Code		See Page	Code		See Page
A7		36	J7	A	40	J42	D	40
A8		36	J8	B	40	J43	E	40
A34		42	J9		40	J44	F	40
B1		36	J11		40	P1		37
C5		38	J13		40	P4		40
C9	A	38	J14		40	S12		41
C10	B	38	J16		40	S17		41
C11	C	38	J18		40	S20	C	41
C12	D	38	J19		40	S36	C	45
D1		36	J20		40	S37	A	37
D3		39	J22		40	S38	B	37
D4		39	J24		40	T3		37
D5		39	J25		40	V3		41
E8		39	J39	A	40	Y1		41
J1		37	J40	B	40			
J5		37	J41	C	40			

: Relay Blocks

Code	See Page	Relay Blocks (Relay Block Location)
2	22	Engine Room R/B (Engine Compartment Left)

: Junction Block and Wire Harness Connector

Code	See Page	Junction Block and Wire Harness (Connector Location)
IB	26	Engine Room Main Wire and Driver Side J/B (Lower Finish Panel)
IE		
IG	27	Instrument Panel Wire and Driver Side J/B (Lower Finish Panel)
IJ		
IK		
IL		
1A	30	Instrument Panel Wire and J/B No.1 (Instrument Panel Reinforcement Left)
1B		
1C		
1D		
2C	32	Instrument Panel Wire and J/B No.2 (Instrument Panel Reinforcement Center)
2D		

: Connector Joining Wire Harness and Wire Harness

Code	See Page	Joining Wire Harness and Wire Harness (Connector Location)
IB2	50	Instrument Panel Wire and Engine Room Main Wire (Left Kick Panel)
IB3		
IB4		
ID2	50	Instrument Panel Wire and Floor No.2 Wire (Left Kick Panel)
IK1	52	Console Box Wire and Instrument Panel Wire (Under the Instrument Panel Brace LH)
IM1	54	Instrument Panel Wire and Switch Wire (Front Side of the Console Box)
IO1	54	Engine Wire and Instrument Panel Wire (Right Side of the Blower Unit)
IO2		
IP3	54	Instrument Panel Wire and Engine Room Main Wire (Right Kick Panel)
IP5		
BE2	58	Frame Wire and Floor No.2 Wire (Under the Left Side of Rear Seat Cushion)

: Ground Points

Code	See Page	Ground Points Location
EA	48	Front Right Fender
EB	48	Front Left Fender
EE	48	Rear Bank of Left Cylinder Head
EG		
IH	50	Left Kick Panel
II	50	Near the Left Side of Steering Column
IJ	50	Near the Right Side of Steering Column

: Splice Points

Code	See Page	Wire Harness with Splice Points	Code	See Page	Wire Harness with Splice Points
E3	48	Engine Room Main Wire	I1	52	Engine Room Main Wire
E8			I5	52	Instrument Panel Wire

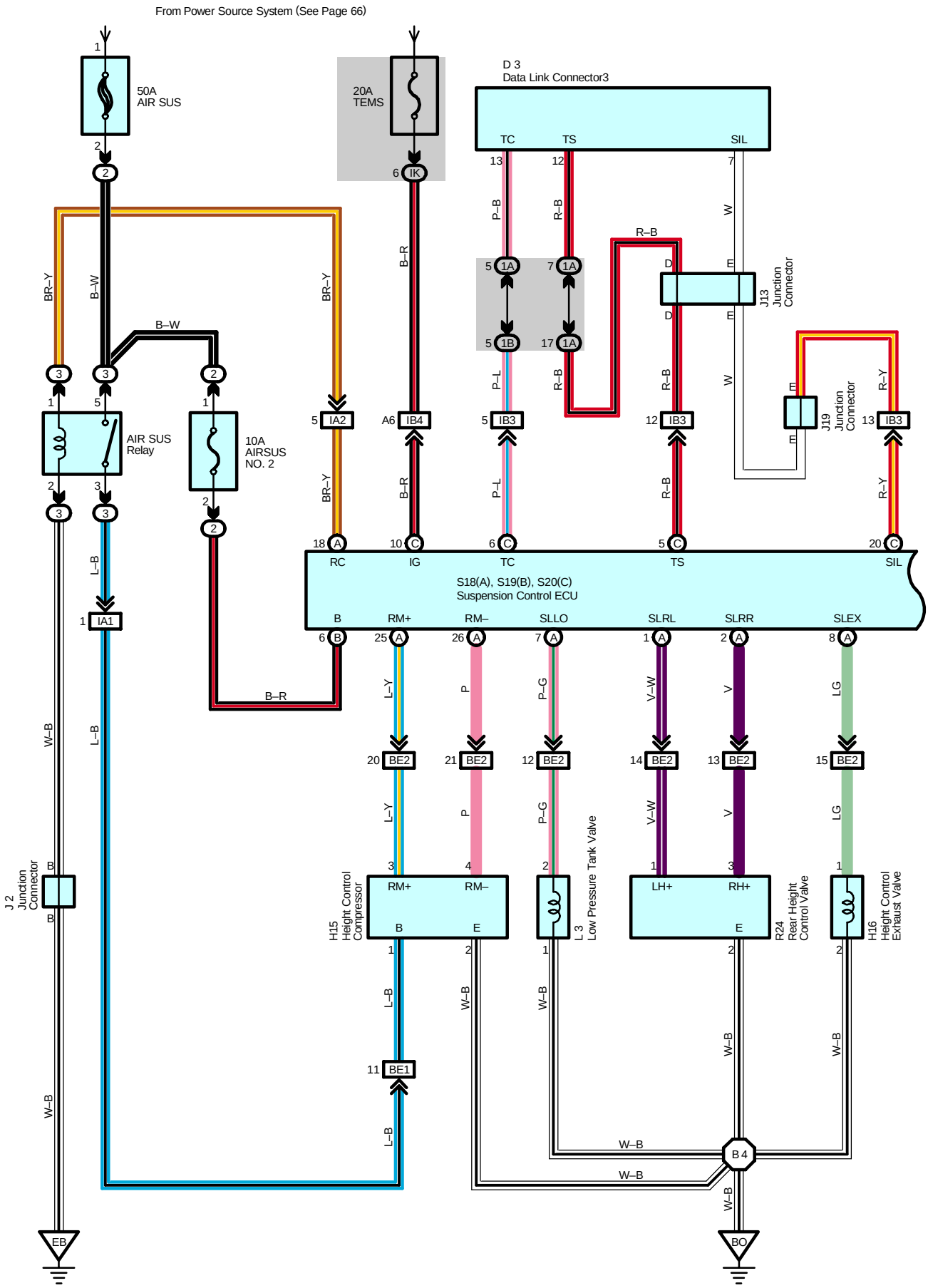
From Power Source System (See Page 66)
50A
AIR SUS
20A
TEMS
D 3
Data Link Connector3
TC
TS
SIL
AIR SUS
Relay
10A
AIRSUS
NO. 2
J13
Junction
Connector
J19
Junction
Connector
S18(A), S19(B), S20(C)
Suspension Control ECU
RC
IG
TC
TS
SIL
B
RM+
RM–
SLLO
SLRL
SLRR
SLEX
J 2
Junction
Connector
H15
Height Control
Compressor
L 3
Low Pressure Tank Valve
R24
Rear Height
Control Valve
H16
Height Control
Exhaust Valve
LH+
RH+
B 4
EB
BO

* 1 : Kinetic Dynamic Suspension System

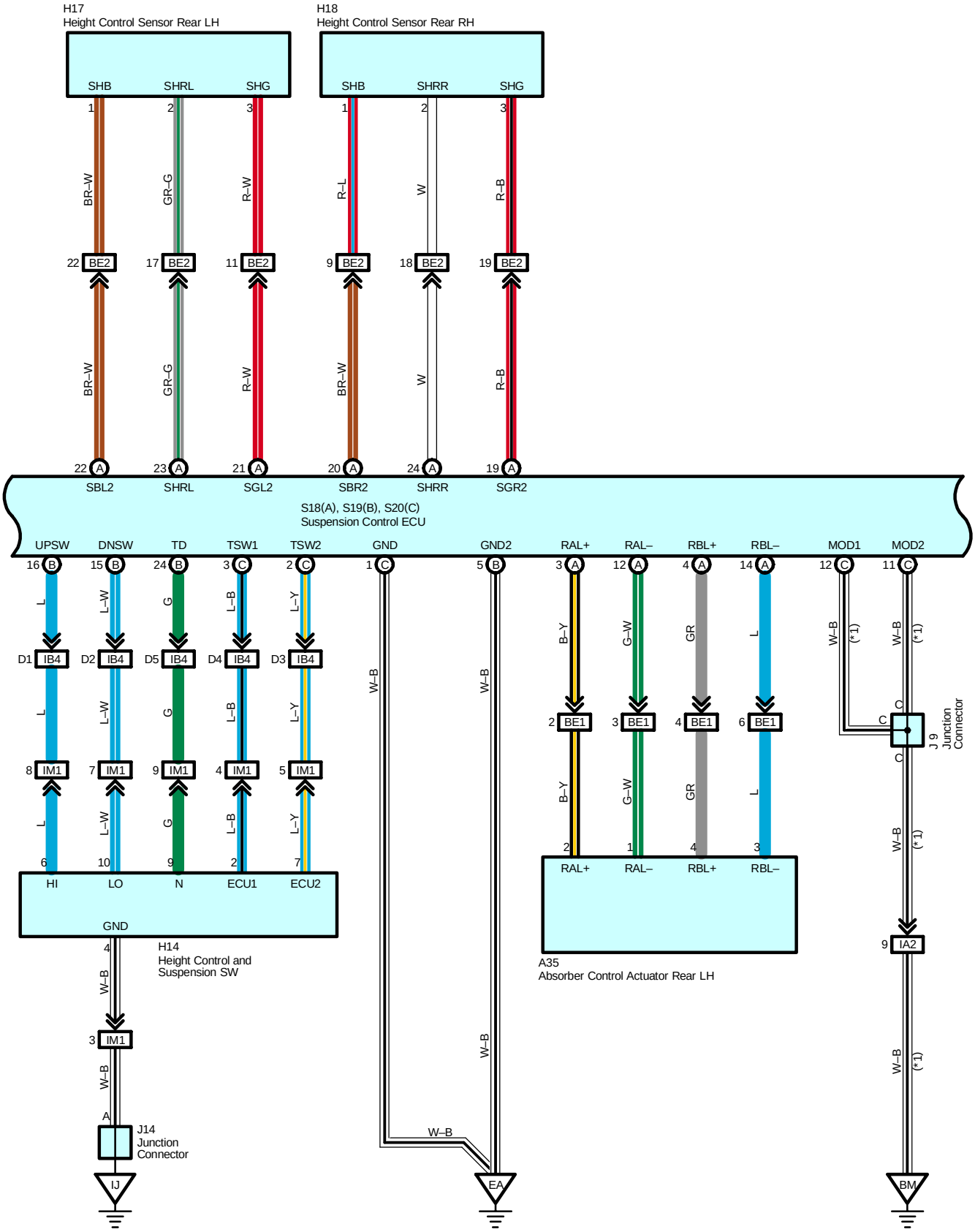

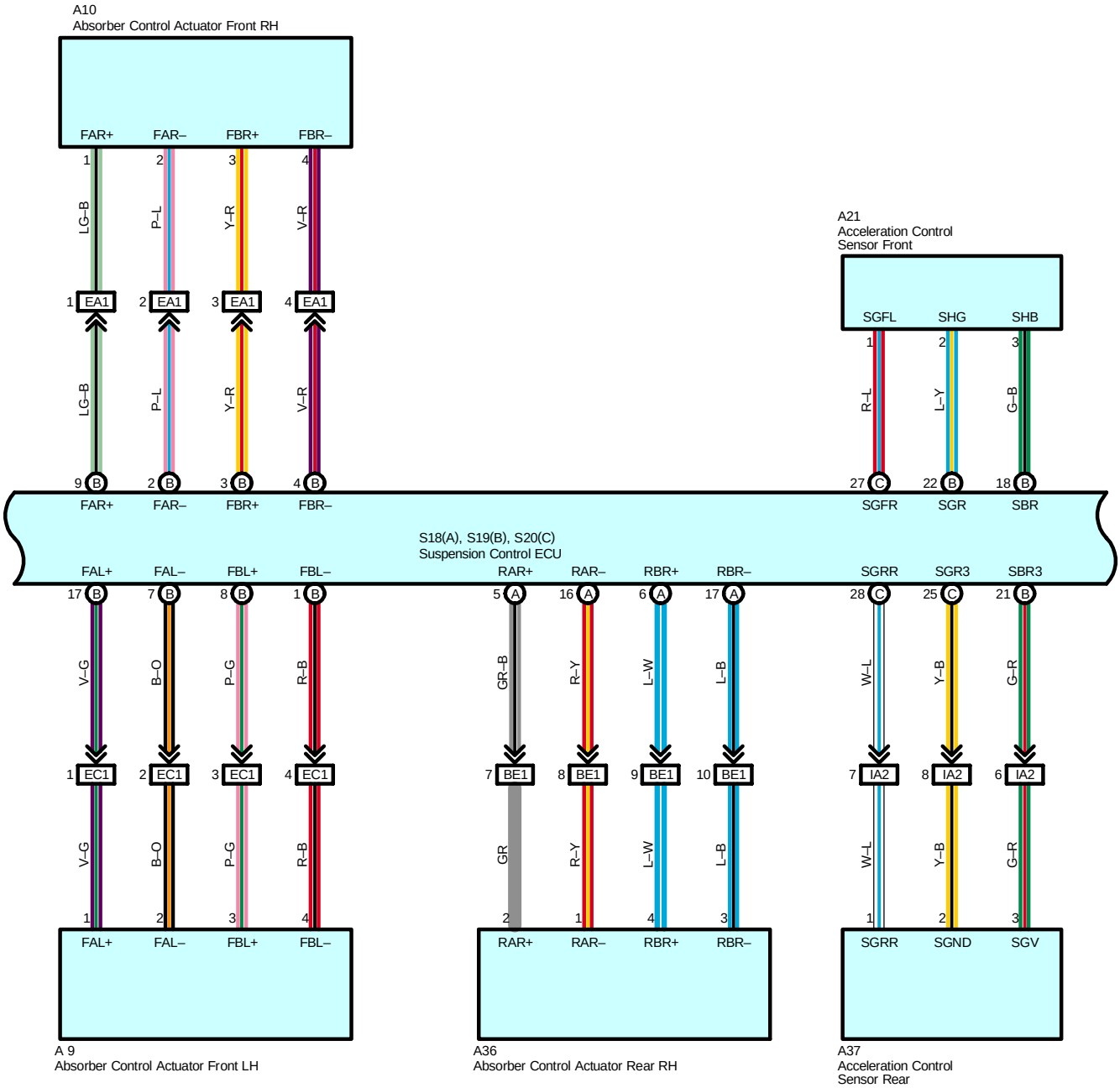
A10
Absorber Control Actuator Front RH
FAR+
FAR–
FBR+
FBR–
LG–B
P–L
Y–R
V–R
EA1
A21
Acceleration Control
Sensor Front
SGFL
SHG
SHB
R–L
L–Y
G–B
FAR+
FAR–
FBR+
FBR–
SGFR
SGR
SBR
S18(A), S19(B), S20(C)
Suspension Control ECU
FAL+
FAL–
FBL+
FBL–
RAR+
RAR–
RBR+
RBR–
SGRR
SGR3
SBR3
V–G
B–O
P–G
R–B
GR–B
R–Y
L–W
L–B
W–L
Y–B
G–R
EC1
BE1
IA2
GR
SGND
SGV
A 9
Absorber Control Actuator Front LH
A36
Absorber Control Actuator Rear RH
A37
Acceleration Control
Sensor Rear

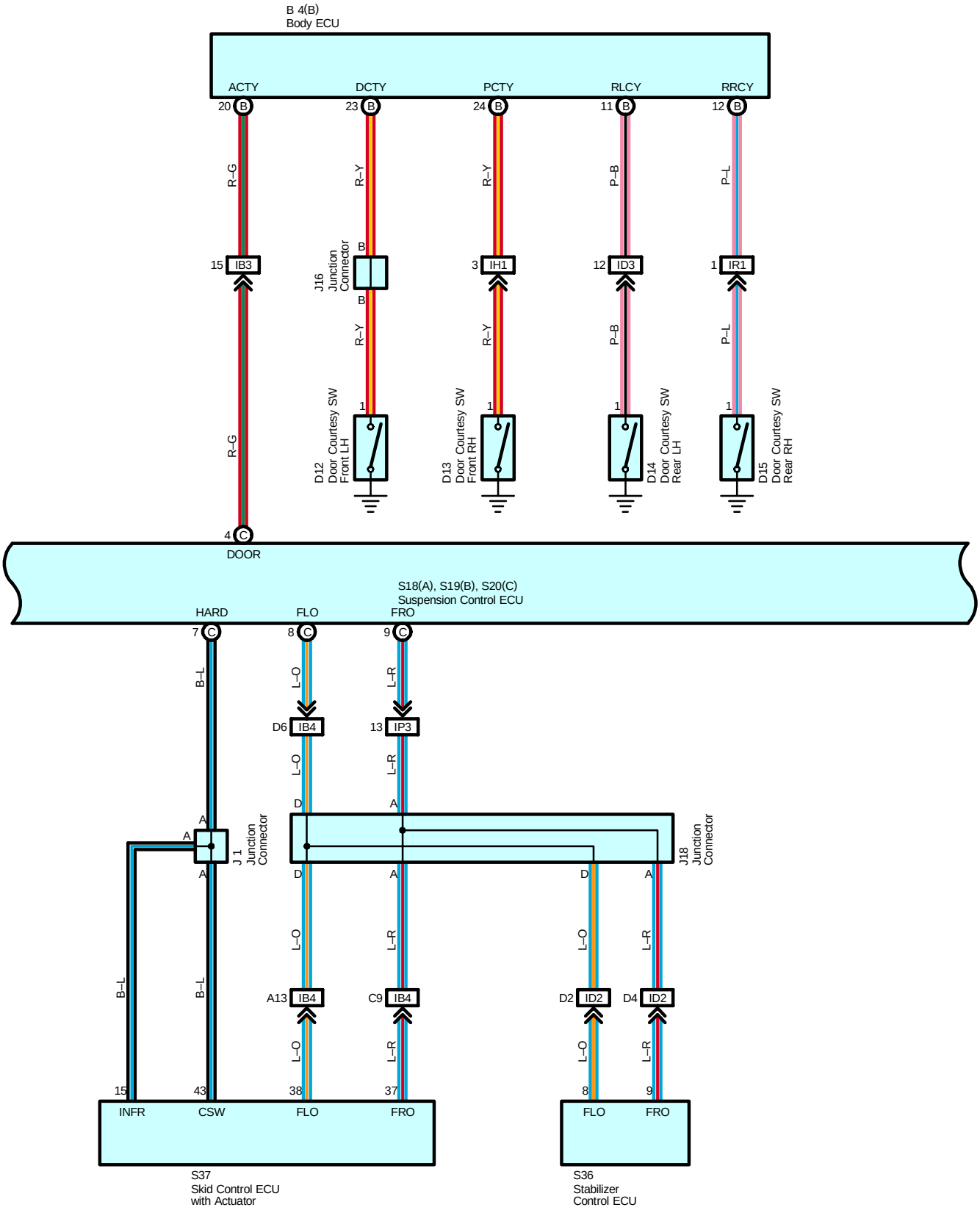
B 4(B)
Body ECU
ACTY
DCTY
PCTY
RLCY
RRCY
20 B
23 B
24 B
11 B
12 B
R–G
R–Y
R–Y
P–B
P–L
15 IB3
J16
Junction
Connector
B
B
3 IH1
12 ID3
1 IR1
R–Y
R–Y
P–B
P–L
1
1
1
1
D12
Door Courtesy SW
Front LH
D13
Door Courtesy SW
Front RH
D14
Door Courtesy SW
Rear LH
D15
Door Courtesy SW
Rear RH
R–G
4 C
DOOR
S18(A), S19(B), S20(C)
Suspension Control ECU
HARD
FLO
FRO
7 C
8 C
9 C
B–L
L–O
L–R
D6 IB4
13 IP3
L–O
L–R
D
A
A
A
J 1
Junction
Connector
J18
Junction
Connector
A
D
A
D
A
L–O
L–R
L–O
L–R
B–L
B–L
A13 IB4
C9 IB4
D2 ID2
D4 ID2
L–O
L–R
L–O
L–R
15
43
38
37
8
9
INFR
CSW
FLO
FRO
FLO
FRO
S37
Skid Control ECU
with Actuator
S36
Stabilizer
Control ECU

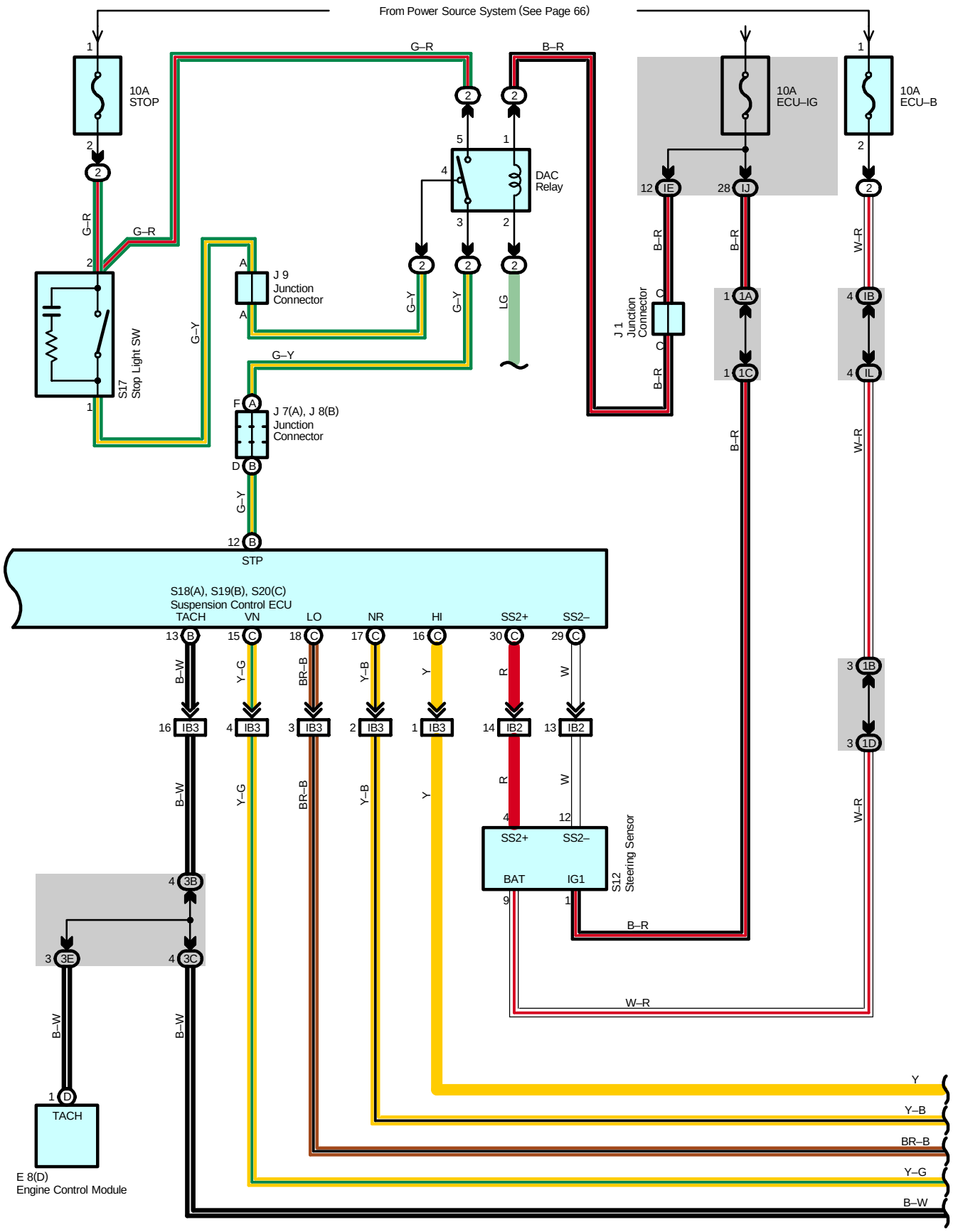
From Power Source System (See Page 66)
10A STOP
10A ECU–IG
10A ECU–B
DAC Relay
J 9 Junction Connector
J 7(A), J 8(B) Junction Connector
J 1 Junction Connector
S17 Stop Light SW
STP
S18(A), S19(B), S20(C) Suspension Control ECU
TACH
VN
LO
NR
HI
SS2+
SS2–
BAT
IG1
S12 Steering Sensor
E 8(D) Engine Control Module
G–R
B–R
G–Y
LG
B–W
Y–G
BR–B
Y–B
Y
W–R

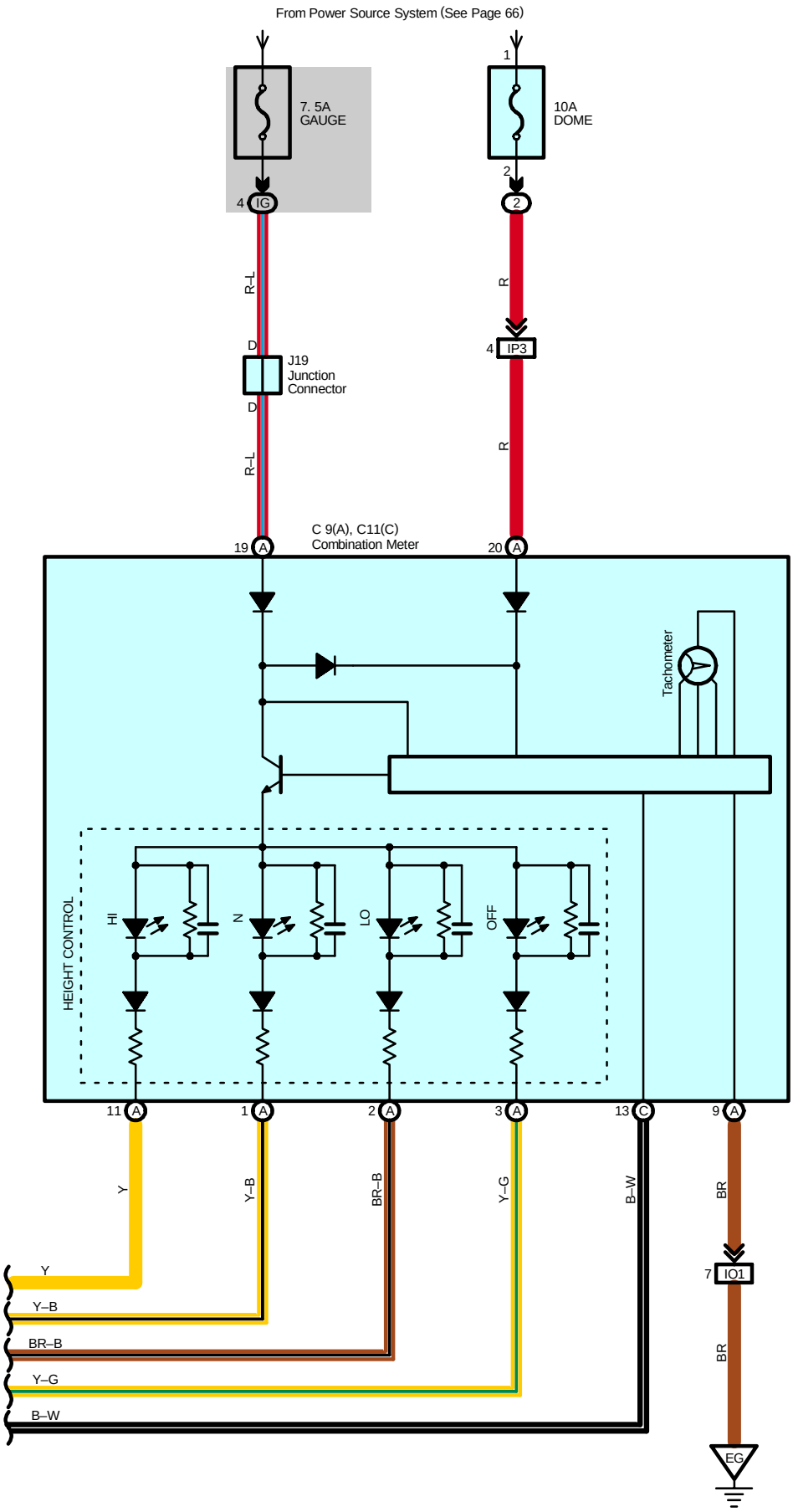
From Power Source System (See Page 66)
7. 5A
GAUGE
10A
DOME
4 IG
1
2
2
R–L
R
D
J19
Junction
Connector
D
4 IP3
R–L
R
C 9(A), C11(C)
Combination Meter
19 A
20 A
Tachometer
HEIGHT CONTROL
HI
N
LO
OFF
11 A
1 A
2 A
3 A
13 C
9 A
Y
Y–B
BR–B
Y–G
B–W
BR
7 IO1
BR
EG

System Outline

* The electric modulated suspension with height control, is a system designed to maintain a constant ride height by means of an electro–pneumatic system in the rear suspension – to cope with change in load due to possible change in the number of people and/or the weight of cargo the vehicle has to carry. With three driver's–choice height–control switches on the console, the driver can set ride height to any one of the three different ride height modes (High, normal and low): "High mode" for rough terrain and "Low mode" for passenger to get on or get off, and for cargo to be loaded or unloaded.
* This system has five basic controls as shown below:
* Auto leveling control
  This control maintains a constant rear vehicle ride height regardless of change in load due to possible change in the number of passengers and/or the weight of cargo the vehicle has to carry.
* Ride height switchover control
  This control switches over height mode to the mode selected by the height control switch.
  * High mode (+ 40 mm / 1.6 in.)
  * Low mode (– 20 mm / 0.8 in.)
* Speed sensing control
  Regardless of the initial height mode setting, "High mode" or "Low mode," this control automatically switches over vehicle height mode to the optimum "Normal mode":
  * When the vehicle speed reaches or exceeds 30 km/h with height mode set to "High mode," or;
  * When the vehicle speed reaches or exceeds 5 km/h with height mode set to "Low mode."
* Subsequent control after ignition switch off
  After the ignition switch is turned OFF, this control lowers the rear vehicle ride height to offset rear vehicle ride height elevation due to passengers getting off, etc.
* Height control OFF control
  Pressing the absorber control switch turns the system OFF, making it possible for the vehicle to be jacked up or towed.

Service Hints

S19 (B), S20 (C) Suspension Control ECU

(C)10–Ground : Approx. 12 volts with the ignition SW at ON position
(B) 5, (C) 1, (C) 11, (C) 12–Ground : Always continuity

: Parts Location

Code		See Page	Code		See Page	Code		See Page
A9		36	D15		42	J14		40
A10		36	E8	D	39	J16		40
A21		38	H14		39	J18		40
A35		42	H15		43	J19		40
A36		42	H16		43	L3		43
A37		42	H17		43	R24		44
B4	B	38	H18		43	S12		41
C9	A	38	J1		37	S17		41
C11	C	38	J2		37	S18	A	41
D3		39	J7	A	40	S19	B	41
D12		42	J8	B	40	S20	C	41
D13		42	J9		40	S36		45
D14		42	J13		40	S37		37

: Relay Blocks

Code	See Page	Relay Blocks (Relay Block Location)
2	22	Engine Room R/B (Engine Compartment Left)
3	23	Engine Room R/B No.3 (Engine Compartment Left)

: Junction Block and Wire Harness Connector

Code	See Page	Junction Block and Wire Harness (Connector Location)
IB	26	Engine Room Main Wire and Driver Side J/B (Lower Finish Panel)
IE		
IG	27	Instrument Panel Wire and Driver Side J/B (Lower Finish Panel)
IJ		
IK		
IL		
1A	30	Instrument Panel Wire and J/B No.1 (Instrument Panel Reinforcement Left)
1B		
1C		
1D		
3B	34	Instrument Panel Wire and J/B No.3 (Instrument Panel Reinforcement Right)
3C		
3E		

: Connector Joining Wire Harness and Wire Harness

Code	See Page	Joining Wire Harness and Wire Harness (Connector Location)
EA1	48	Sensor Wire and Engine Room Main Wire (Near the Air Cleaner)
EC1	48	Sensor Wire and Engine Room Main Wire (Near the Engine Room R/B)
IA1	50	Floor No.2 Wire and Engine Room Main Wire (Left Kick Panel)
IA2		
IB2	50	Instrument Panel Wire and Engine Room Main Wire (Left Kick Panel)
IB3		
IB4		
ID2	50	Instrument Panel Wire and Floor No.2 Wire (Left Kick Panel)
ID3		
IH1	52	Instrument Panel Wire and Instrument Panel Wire (Near the J/B No.1)
IM1	54	Instrument Panel Wire and Switch Wire (Front Side of the Console Box)
IO1	54	Engine Wire and Instrument Panel Wire (Right Side of the Blower Unit)
IP3	54	Instrument Panel Wire and Engine Room Main Wire (Right Kick Panel)
IR1	56	Instrument Panel Wire and Floor Wire (Right Kick Panel)
BE1	58	Frame Wire and Floor No.2 Wire (Under the Left Side of Rear Seat Cushion)
BE2		

: Ground Points

Code	See Page	Ground Points Location
EA	48	Front Right Fender
EB	48	Front Left Fender
EG	48	Rear Bank of Left Cylinder Head
IJ	50	Near the Right Side of Steering Column
BM	58	Under the Driver's Seat
BO	58	Near the Left Side of No.5 Cross Member

: Splice Points

Code	See Page	Wire Harness with Splice Points	Code	See Page	Wire Harness with Splice Points
B4	60	Frame Wire			

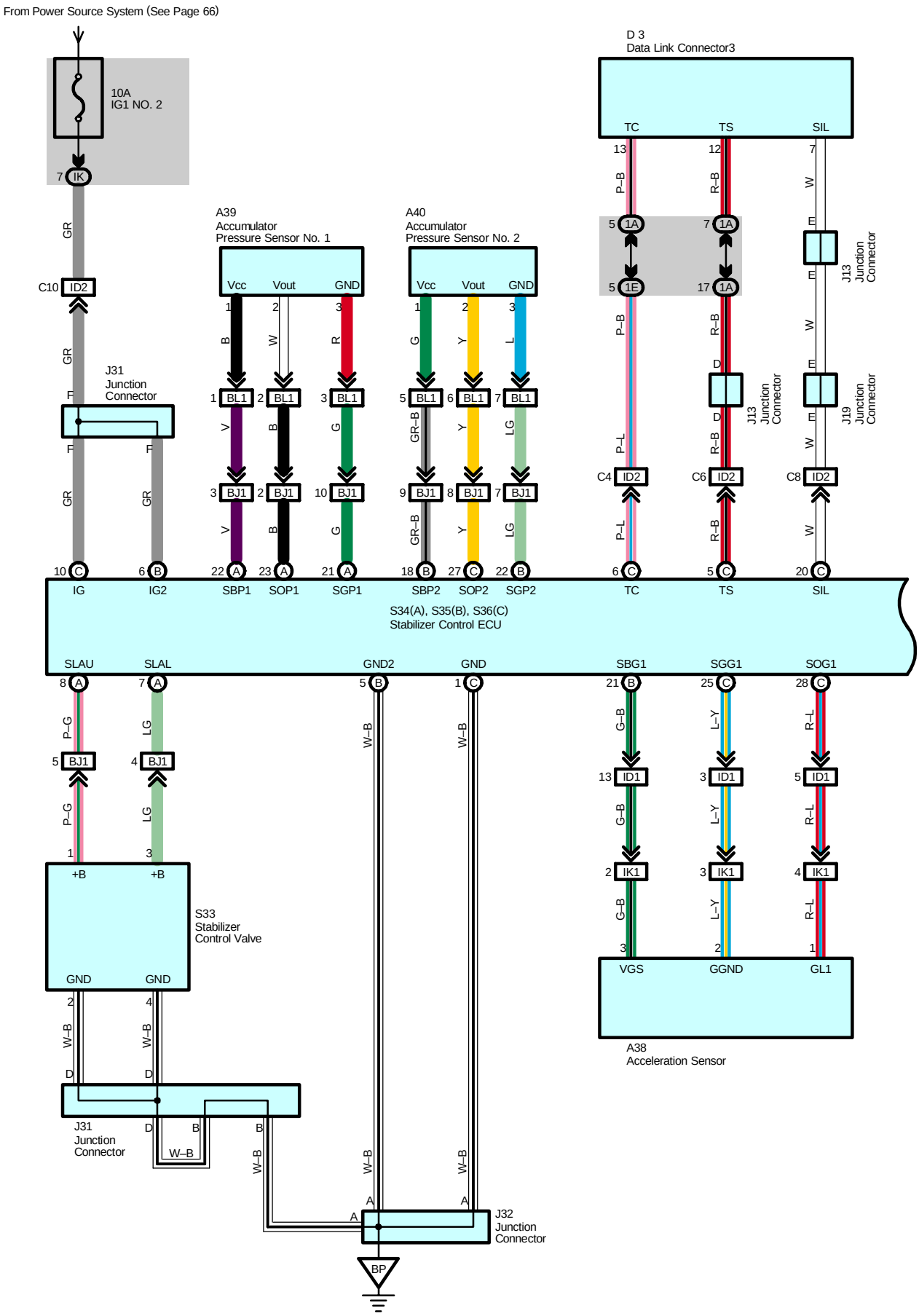
From Power Source System (See Page 66)
10A
IG1 NO. 2
7 IK
GR
C10 ID2
GR
J31
Junction
Connector
F
F
F
GR
GR
10 C IG
6 B IG2
A39
Accumulator
Pressure Sensor No. 1
Vcc
Vout
GND
1 B
2 W
3 R
1 BL1
2 BL1
3 BL1
V
B
G
3 BJ1
2 BJ1
10 BJ1
V
B
G
22 A SBP1
23 A SOP1
21 A SGP1
A40
Accumulator
Pressure Sensor No. 2
Vcc
Vout
GND
1 G
2 Y
3 L
5 BL1
6 BL1
7 BL1
GR–B
Y
LG
9 BJ1
8 BJ1
7 BJ1
GR–B
Y
LG
18 B SBP2
27 C SOP2
22 B SGP2
D 3
Data Link Connector3
TC
TS
SIL
13 P–B
12 R–B
7 W
5 1A
7 1A
E
5 1E
17 1A
E
J13
Junction
Connector
P–B
R–B
W
D
E
J13
Junction
Connector
J19
Junction
Connector
P–L
D
R–B
E
W
C4 ID2
C6 ID2
C8 ID2
P–L
R–B
W
6 C TC
5 C TS
20 C SIL
S34(A), S35(B), S36(C)
Stabilizer Control ECU
SLAU
SLAL
GND2
GND
SBG1
SGG1
SOG1
8 A
7 A
5 B
1 C
21 B
25 C
28 C
P–G
LG
W–B
W–B
G–B
L–Y
R–L
5 BJ1
4 BJ1
13 ID1
3 ID1
5 ID1
P–G
LG
G–B
L–Y
R–L
1
3
2 IK1
3 IK1
4 IK1
+B
+B
S33
Stabilizer
Control Valve
G–B
L–Y
R–L
3
2
1
GND
GND
VGS
GGND
GL1
2
4
W–B
W–B
D
D
A38
Acceleration Sensor
J31
Junction
Connector
D
B
B
W–B
W–B
W–B
W–B
W–B
A
A
A
J32
Junction
Connector
BP

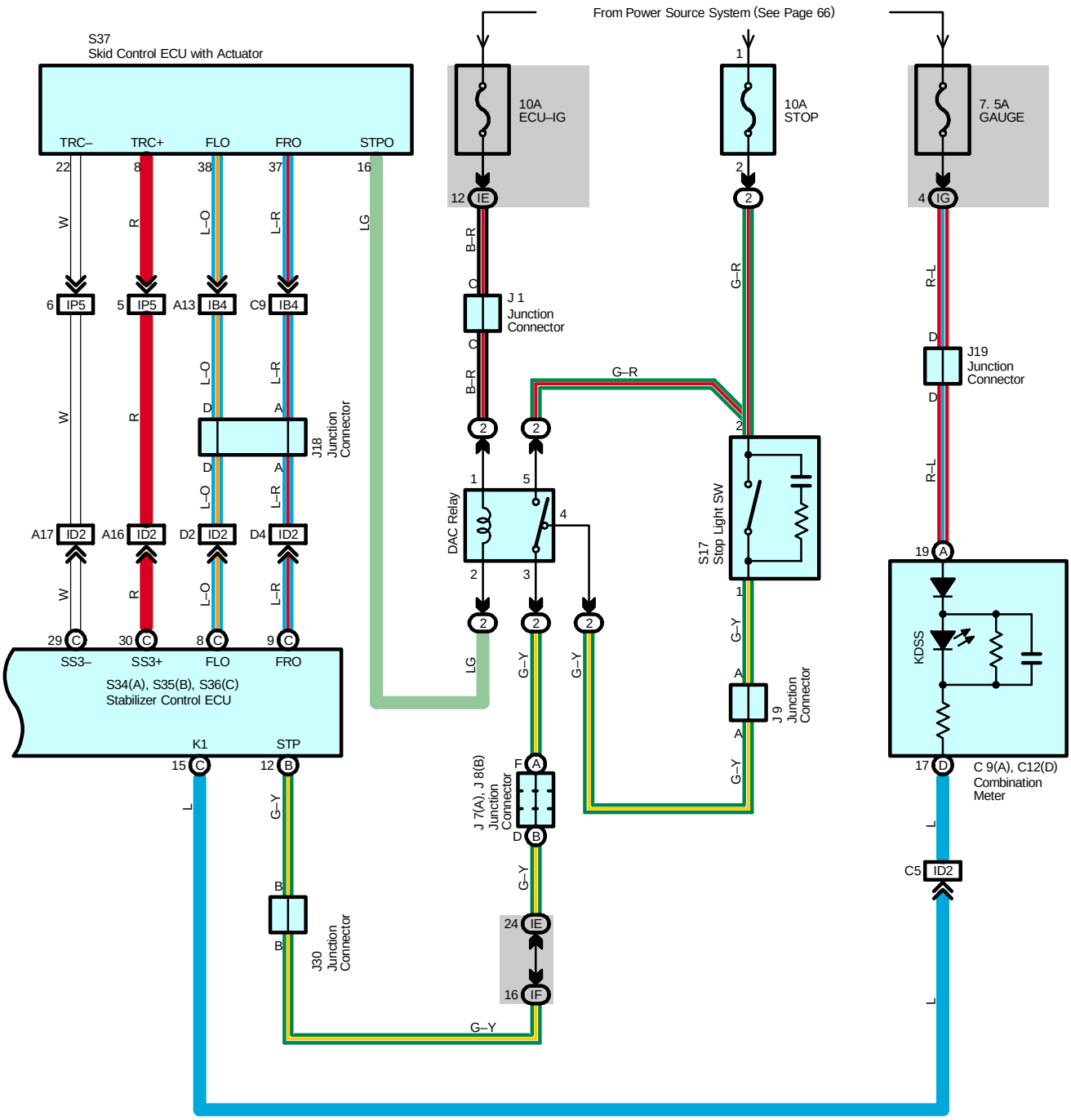
From Power Source System (See Page 66)
S37
Skid Control ECU with Actuator
TRC–
TRC+
FLO
FRO
STPO
10A
ECU–IG
10A
STOP
7. 5A
GAUGE
IP5
IB4
ID2
J 1
Junction
Connector
J18
Junction
Connector
DAC Relay
S17
Stop Light SW
J19
Junction
Connector
J 9
Junction
Connector
KDSS
C 9(A), C12(D)
Combination
Meter
SS3–
SS3+
S34(A), S35(B), S36(C)
Stabilizer Control ECU
K1
STP
J 7(A), J 8(B)
Junction
Connector
J30
Junction
Connector
G–R
G–Y
B–R
R–L
LG
L

System Outline

In this system, hydraulic cylinder is added to stabilizer and, front and rear stabilizers are connected with pipes to improve maneuverability and steering.

1. Operation at Rolling

Oil pressure of front and rear cylinder balance out each other, resulting the cylinder not to stroke.
The stabilizer functions as usual to prevent from rolling.

2. Operation at One Side Wheel Lifted Up

As front and rear cylinders stroke in opposite directions each other, the stabilizer hardly functions and does not prevent from stroke.

Service Hints

S35 (B), S36 (C) Stabilizer Control ECU

(C)10, (B) 6–Ground: Approx. 12 volts with the ignition SW at ON or ACC position
(C) 1, (B) 5–Ground : Always continuity

: Parts Location

Code		See Page	Code		See Page	Code		See Page
A38		38	J8	B	40	S17		41
A39		42	J9		40	S33		45
A40		42	J13		40	S34	A	45
C9	A	38	J18		40	S35	B	45
C12	D	38	J19		40	S36	C	45
D3		39	J30		43	S37		37
J1		37	J31		43			
J7	A	40	J32		43			

: Relay Blocks

Code	See Page	Relay Blocks (Relay Block Location)
2	22	Engine Room R/B (Engine Compartment Left)

: Junction Block and Wire Harness Connector

Code	See Page	Junction Block and Wire Harness (Connector Location)
IE	26	Engine Room Main Wire and Driver Side J/B (Lower Finish Panel)
IF	26	Floor No.2 Wire and Driver Side J/B (Lower Finish Panel)
IG	27	Instrument Panel Wire and Driver Side J/B (Lower Finish Panel)
IK		
1A	30	Instrument Panel Wire and J/B No.1 (Instrument Panel Reinforcement Left)
1E		

: Connector Joining Wire Harness and Wire Harness

Code	See Page	Joining Wire Harness and Wire Harness (Connector Location)
IB4	50	Instrument Panel Wire and Engine Room Main Wire (Left Kick Panel)
ID1	50	Instrument Panel Wire and Floor No.2 Wire (Left Kick Panel)
ID2		
IK1	52	Console Box Wire and Instrument Panel Wire (Under the Instrument Panel Brace LH)
IP5	54	Instrument Panel Wire and Engine Room Main Wire (Right Kick Panel)
BJ1	60	Floor No.2 Wire and Floor No.2 Wire (Left Side Rear Quarter Panel)
BL1	60	Floor Wire and Accumulator Pressure Sensor Wire (Main Floor Side Member LH)

: Ground Points

Code	See Page	Ground Points Location
BP	58	Left Quarter Panel Inner

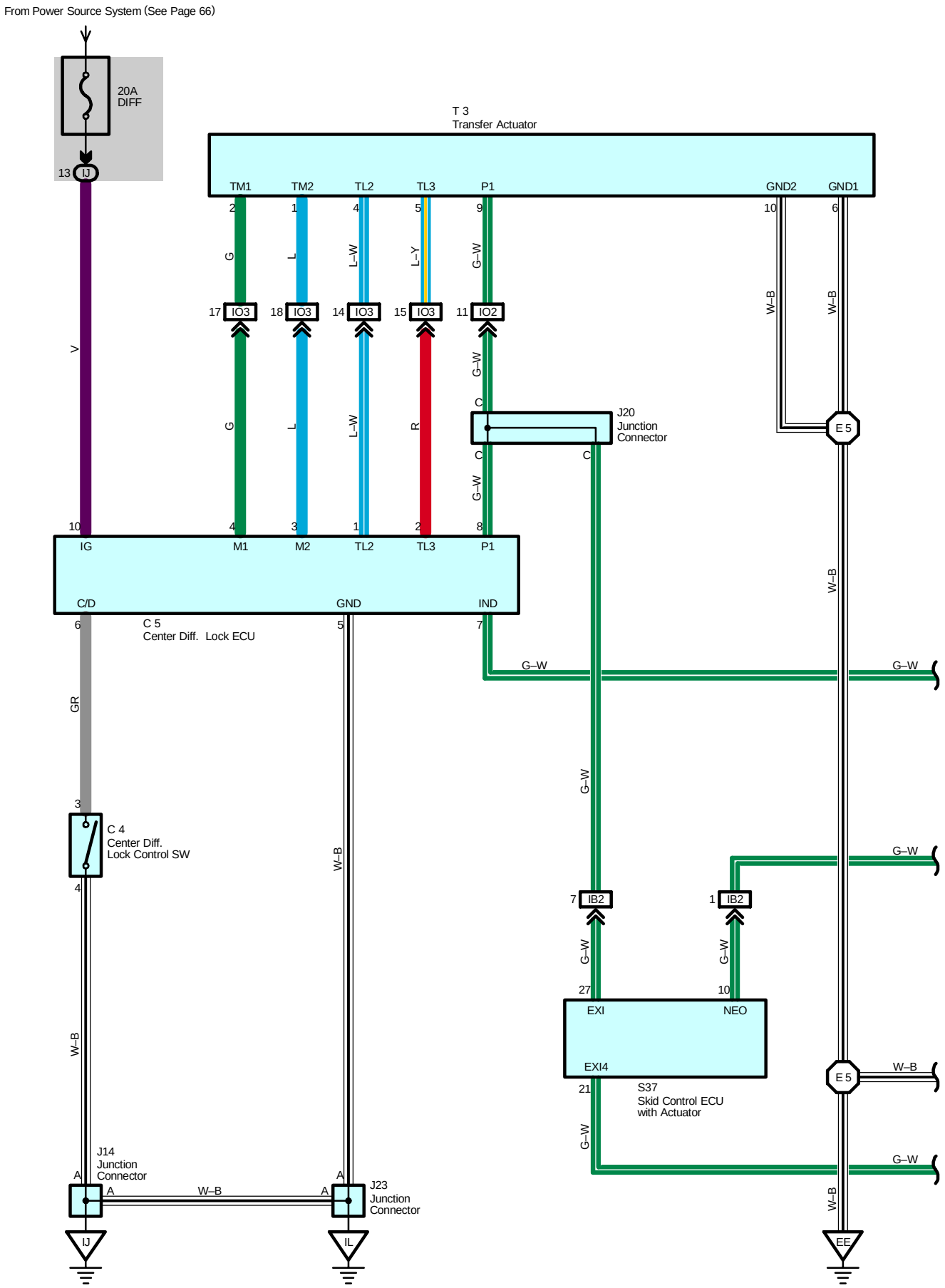
From Power Source System (See Page 66)
20A
DIFF
13 IJ
T 3
Transfer Actuator
TM1
TM2
TL2
TL3
P1
GND2
GND1
2
1
4
5
9
10
6
G
L
L–W
L–Y
G–W
W–B
W–B
17 IO3
18 IO3
14 IO3
15 IO3
11 IO2
V
G–W
C
J20
Junction
Connector
E 5
G
L
L–W
R
C
C
G–W
10
4
3
1
2
8
IG
M1
M2
TL2
TL3
P1
W–B
C/D
GND
IND
6
C 5
Center Diff. Lock ECU
5
7
G–W
G–W
GR
G–W
3
C 4
Center Diff.
Lock Control SW
W–B
G–W
4
7 IB2
1 IB2
G–W
G–W
27
10
EXI
NEO
W–B
EXI4
E 5
W–B
21
S37
Skid Control ECU
with Actuator
G–W
J14
Junction
Connector
A
A
W–B
A
A
J23
Junction
Connector
G–W
W–B
IJ
IL
EE

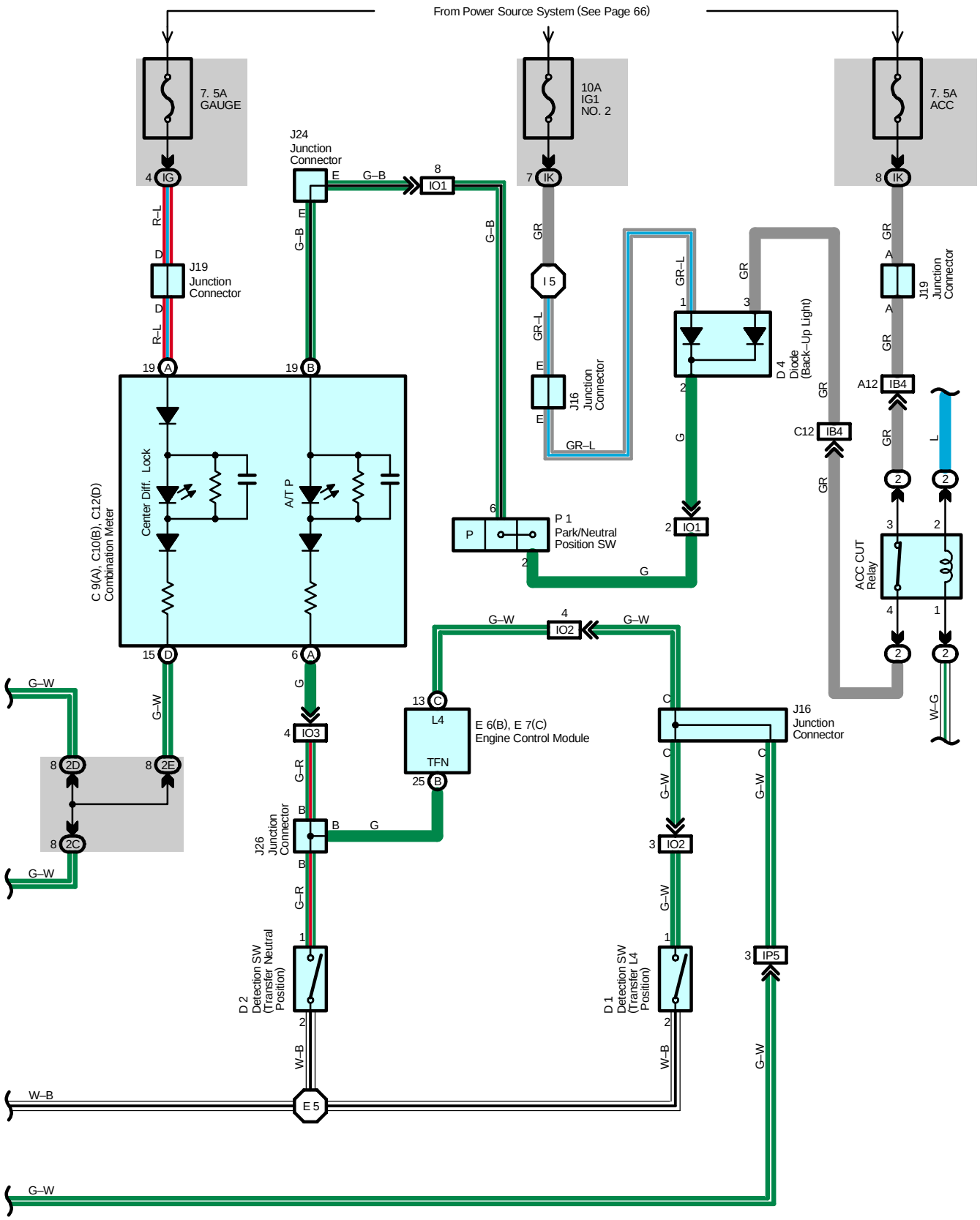
From Power Source System (See Page 66)
7. 5A
GAUGE
10A
IG1
NO. 2
7. 5A
ACC
J24
Junction
Connector
J19
Junction
Connector
J16
Junction
Connector
D 4
Diode
(Back–Up Light)
C 9(A), C10(B), C12(D)
Combination Meter
Center Diff. Lock
A/T P
P 1
Park/Neutral
Position SW
ACC CUT
Relay
E 6(B), E 7(C)
Engine Control Module
J26
Junction
Connector
D 2
Detection SW
(Transfer Neutral
Position)
D 1
Detection SW
(Transfer L4
Position)
E 5

Center Differential Lock

System Outline

Operating the center differential lock control switch located in the center console, the center diff. lock ECU operates the motor in the transfer actuator, slides the shift fork shaft and switches to the differential lock condition or differential free condition.

Service Hints

C5 Center Diff. Lock ECU

10–Ground : Approx. 12 volts with the ignition SW at ON position
5–Ground : Always continuity

: Parts Location

Code		See Page	Code		See Page	Code	See Page
C4		38	D4		39	J23	40
C5		38	E6	B	39	J24	40
C9	A	38	E7	C	39	J26	40
C10	B	38	J14		40	P1	37
C12	D	38	J16		40	S37	37
D1		36	J19		40	T3	37
D2		36	J20		40		

: Relay Blocks

Code	See Page	Relay Blocks (Relay Block Location)
2	22	Engine Room R/B (Engine Compartment Left)

: Junction Block and Wire Harness Connector

Code	See Page	Junction Block and Wire Harness (Connector Location)
IG	27	Instrument Panel Wire and Driver Side J/B (Lower Finish Panel)
IJ		
IK		
2C	32	Instrument Panel Wire and J/B No.2 (Instrument Panel Reinforcement Center)
2D		
2E		

: Connector Joining Wire Harness and Wire Harness

Code	See Page	Joining Wire Harness and Wire Harness (Connector Location)
IB2	50	Instrument Panel Wire and Engine Room Main Wire (Left Kick Panel)
IB4		
IO1	54	Engine Wire and Instrument Panel Wire (Right Side of the Blower Unit)
IO2		
IO3		
IP5	54	Instrument Panel Wire and Engine Room Main Wire (Right Kick Panel)

: Ground Points

Code	See Page	Ground Points Location
EE	48	Rear Bank of Left Cylinder Head
IJ	50	Near the Right Side of Steering Column
IL	50	Right Kick Panel

: Splice Points

Code	See Page	Wire Harness with Splice Points	Code	See Page	Wire Harness with Splice Points
E5	48	Engine Wire	I5	52	Instrument Panel Wire

NOTICE: When inspecting or repairing the SRS, perform service in accordance with the following precautionary instructions and the procedure, and precautions in the Repair Manual applicable for the model year.

- Malfunction symptoms of the SRS are difficult to confirm, so the DTCs become the most important source of information when troubleshooting. When troubleshooting the SRS, always inspect the DTCs before disconnecting the battery.
- **Work must be started more than 90 seconds after the ignition SW is turned to the ”LOCK” position and the negative (–) terminal cable is disconnected from the battery.**
  (The SRS is equipped with a back–up power source so that if work is started within 90 seconds from disconnecting the negative (–) terminal cable of the battery, the SRS may deploy.)
- When the negative (–) terminal cable is disconnected from the battery, the memory of the clock and audio system will be cleared. So before starting work, make a record of the contents in the audio memory system. When work is finished, reset the audio systems as they were before and adjust the clock. Some vehicles have power tilt steering, power telescopic steering, power seat and power outside rear view mirror which are all equipped with memory function. However, it is not possible to make a record of these memory contents. So when the work is finished, it will be necessary to explain it to your customer, and ask the customer to adjust the features and reset the memory. To avoid erasing the memory in each system, never use a back–up power supply from outside the vehicle.
- Before repair, remove the airbag sensor if shocks are likely to be applied to the sensor during repair.
- Do not expose the following parts directly to hot air or flame;
- Even in cases of a minor collision where the SRS does not deploy, the following parts should be inspected;
- Never use SRS parts from another vehicle. When replacing parts, replace with new parts.
- For the purpose of reuse, never disassemble and repair the following parts.
- If the following parts have been dropped, or have cracks, dents and other defects in their case, bracket, and connector, replace with new one.
- Use a volt/ohmmeter with high impedance (10 kΩ/V minimum) for troubleshooting electrical circuits of the system.
- Information labels are attached to the periphery of the SRS components. Follow the instructions of the notice.
- After work on the SRS is completed, check the SRS warning light.
- If the vehicle is equipped with a mobile communication system, refer to the precaution in the IN section of the Repair Manual.

* Steering wheel pad
* Front passenger airbag assembly
* Side airbag assembly
* Curtain shield airbag assembly
* Seat belt pretensioner
* Center airbag sensor assembly
* Front airbag sensor assembly
* Side airbag sensor assembly
* Rear airbag sensor assembly

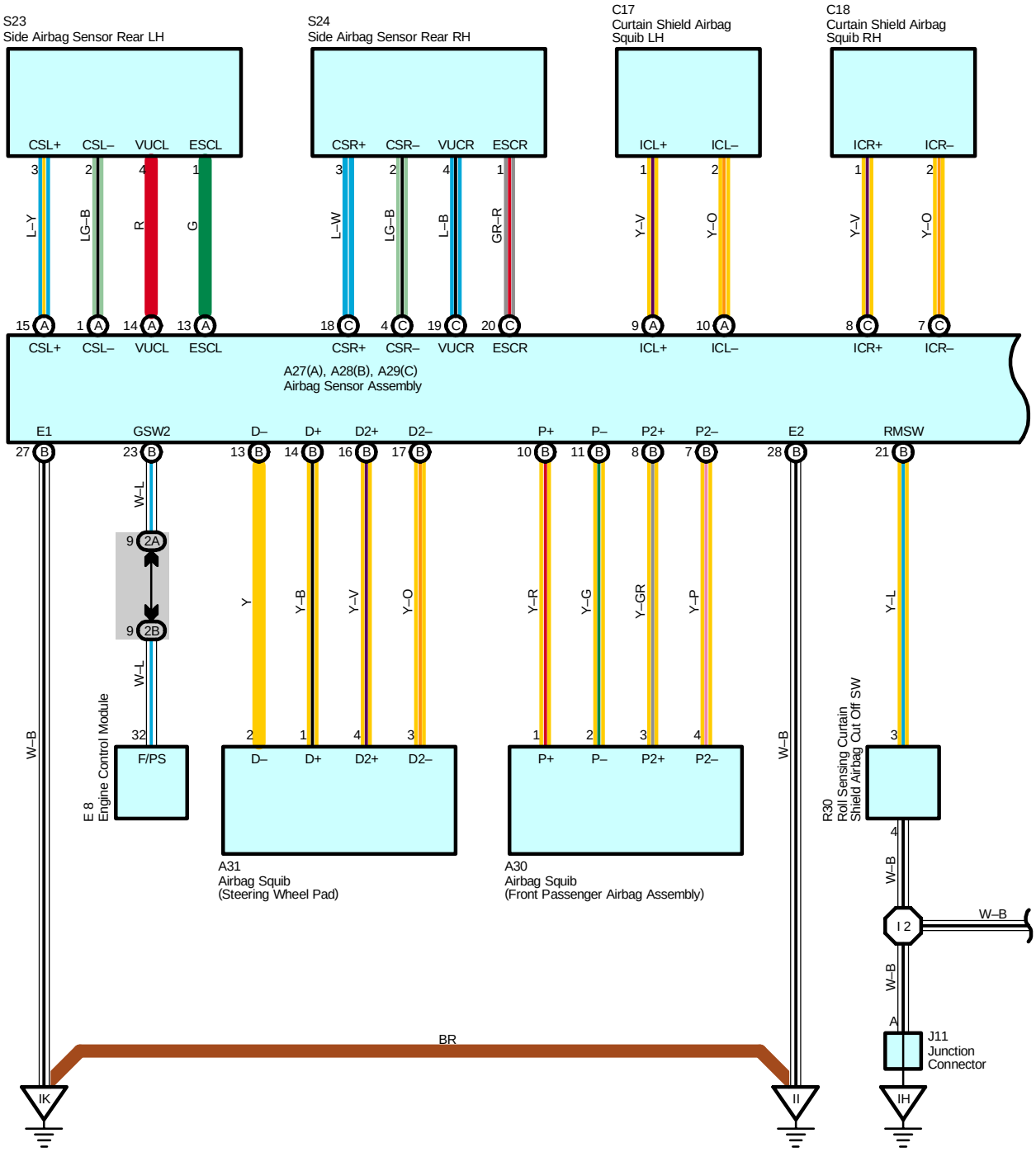
S23
Side Airbag Sensor Rear LH
S24
Side Airbag Sensor Rear RH
C17
Curtain Shield Airbag
Squib LH
C18
Curtain Shield Airbag
Squib RH
CSL+ CSL– VUCL ESCL
CSR+ CSR– VUCR ESCR
ICL+ ICL–
ICR+ ICR–
L–Y LG–B R G
L–W LG–B L–B GR–R
Y–V Y–O
A27(A), A28(B), A29(C)
Airbag Sensor Assembly
E1 GSW2 D– D+ D2+ D2–
P+ P– P2+ P2–
E2 RMSW
W–L
Y Y–B Y–V Y–O
Y–R Y–G Y–GR Y–P
Y–L
W–B
E 8
Engine Control Module
F/PS
A31
Airbag Squib
(Steering Wheel Pad)
A30
Airbag Squib
(Front Passenger Airbag Assembly)
R30
Roll Sensing Curtain
Shield Airbag Cut Off SW
I 2
J11
Junction
Connector
BR
IK
II
IH

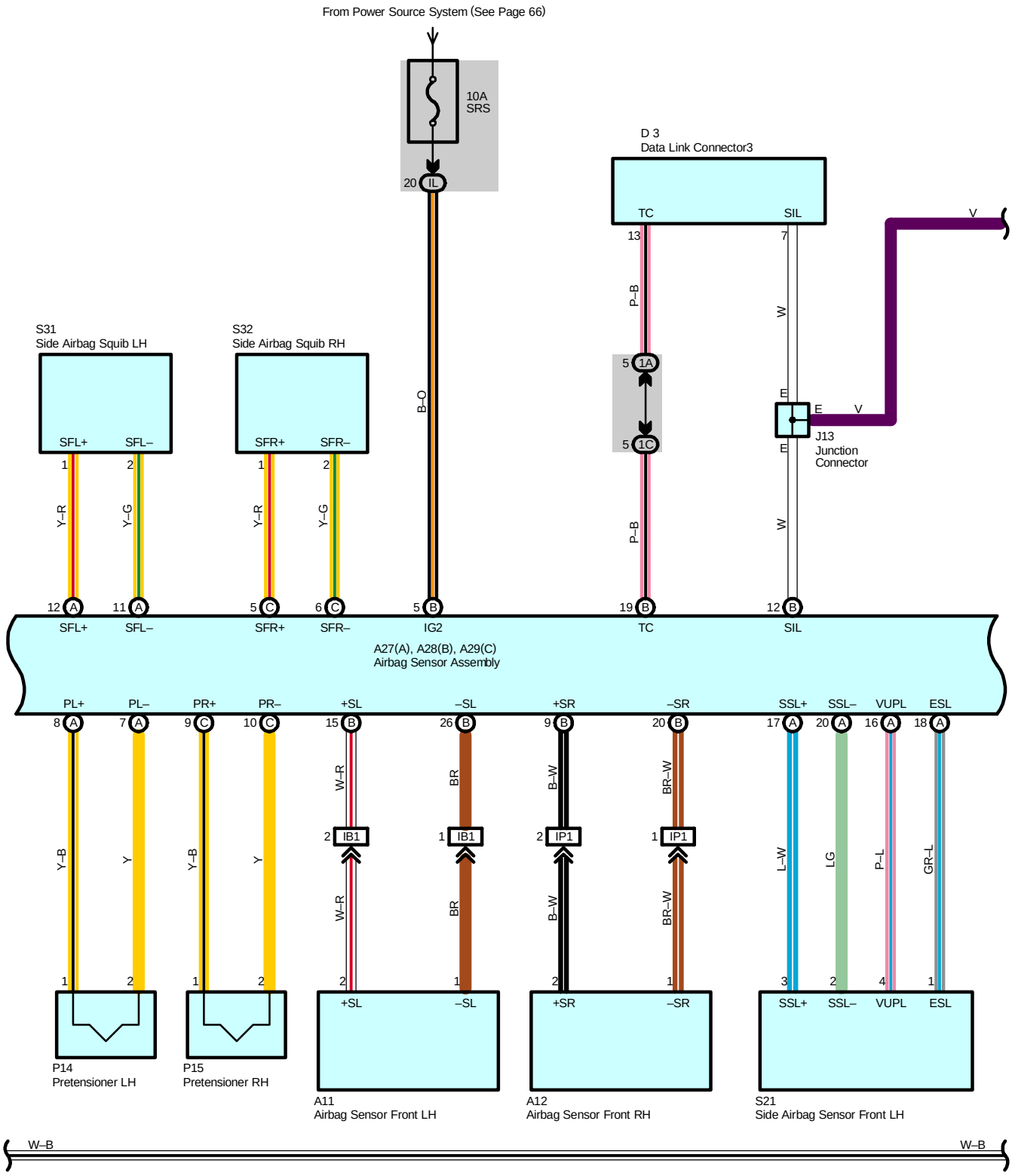
From Power Source System (See Page 66)
10A
SRS
20 IL
B–O
D 3
Data Link Connector3
TC
SIL
13
7
P–B
W
5 1A
5 1C
E
E
V
J13
Junction
Connector
S31
Side Airbag Squib LH
SFL+
SFL–
S32
Side Airbag Squid RH
SFR+
SFR–
Y–R
Y–G
12 A
11 A
5 C
6 C
5 B
19 B
12 B
IG2
A27(A), A28(B), A29(C)
Airbag Sensor Assembly
PL+
PL–
PR+
PR–
+SL
–SL
+SR
–SR
SSL+
SSL–
VUPL
ESL
8 A
7 A
9 C
10 C
15 B
26 B
9 B
20 B
17 A
20 A
16 A
18 A
W–R
BR
B–W
BR–W
L–W
LG
P–L
GR–L
IB1
IP1
Y–B
Y
P14
Pretensioner LH
P15
Pretensioner RH
A11
Airbag Sensor Front LH
A12
Airbag Sensor Front RH
S21
Side Airbag Sensor Front LH
W–B

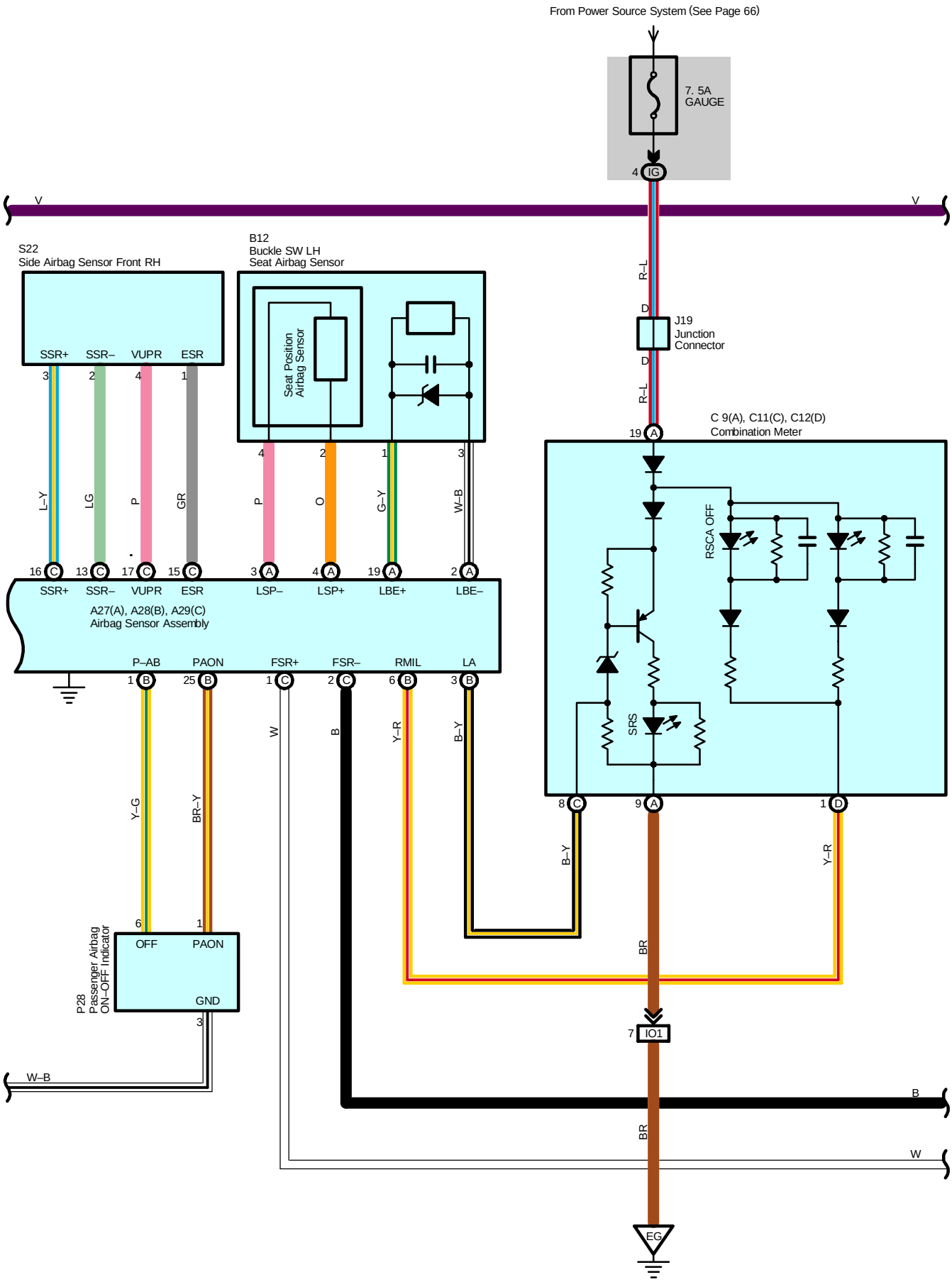
From Power Source System (See Page 66)
7. 5A
GAUGE
4 IG
V
V
S22
Side Airbag Sensor Front RH
SSR+ SSR– VUPR ESR
3 2 4 1
B12
Buckle SW LH
Seat Airbag Sensor
Seat Position
Airbag Sensor
R–L
D
J19
Junction
Connector
D
R–L
19 A
C 9(A), C11(C), C12(D)
Combination Meter
L–Y
LG
P
GR
P
O
G–Y
W–B
RSCA OFF
16 C 13 C 17 C 15 C 3 A 4 A 19 A 2 A
SSR+ SSR– VUPR ESR LSP– LSP+ LBE+ LBE–
A27(A), A28(B), A29(C)
Airbag Sensor Assembly
P–AB PAON FSR+ FSR– RMIL LA
1 B 25 B 1 C 2 C 6 B 3 B
W
B
Y–R
B–Y
SRS
8 C 9 A 1 D
B–Y
Y–R
Y–G
BR–Y
6 1
P28
Passenger Airbag
ON–OFF Indicator
OFF PAON
GND
3
BR
7 IO1
W–B
B
BR
W
EG

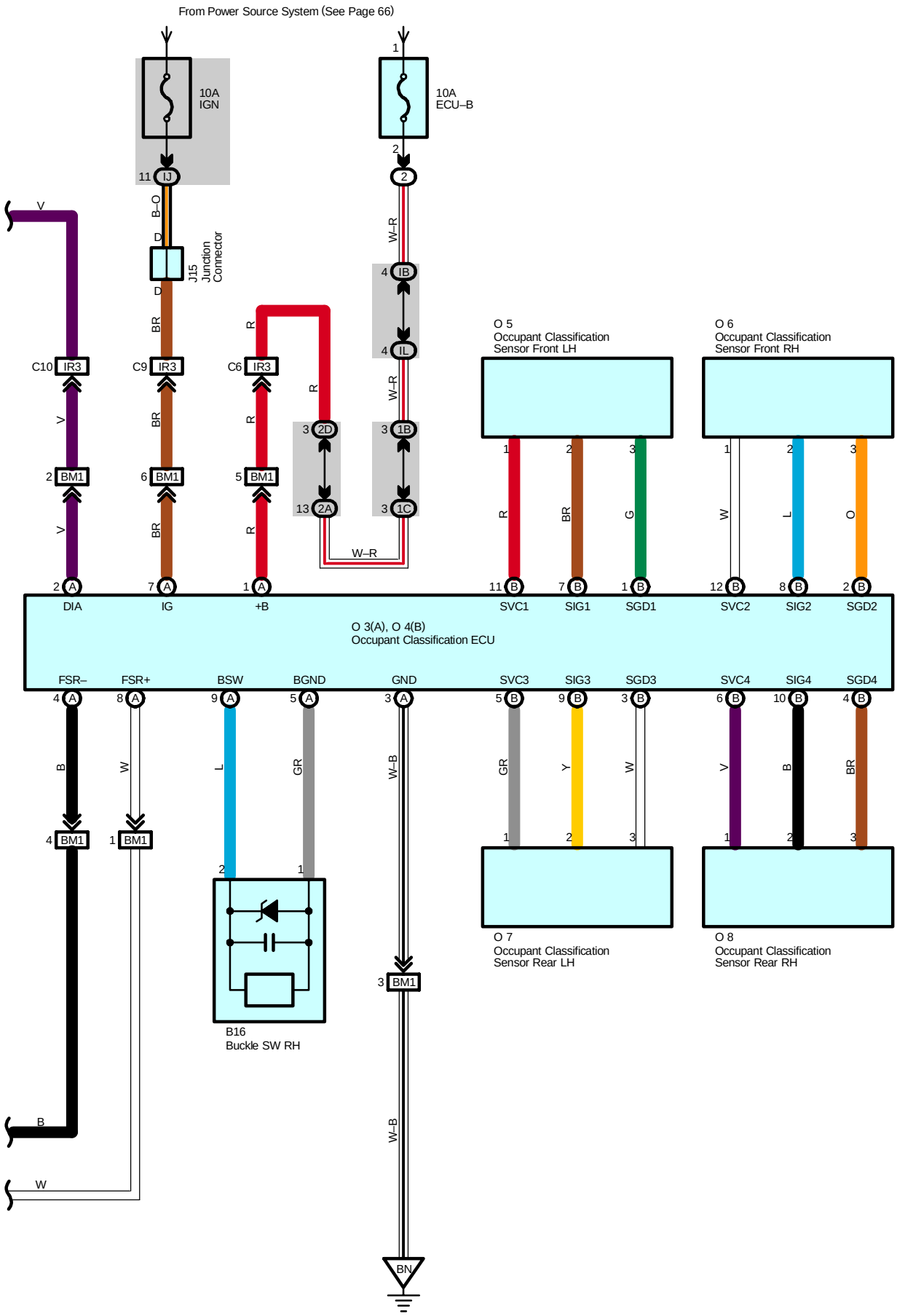
From Power Source System (See Page 66)
10A
IGN
10A
ECU–B
J15
Junction
Connector
O 5
Occupant Classification
Sensor Front LH
O 6
Occupant Classification
Sensor Front RH
DIA
IG
+B
SVC1
SIG1
SGD1
SVC2
SIG2
SGD2
O 3(A), O 4(B)
Occupant Classification ECU
FSR–
FSR+
BSW
BGND
GND
SVC3
SIG3
SGD3
SVC4
SIG4
SGD4
O 7
Occupant Classification
Sensor Rear LH
O 8
Occupant Classification
Sensor Rear RH
B16
Buckle SW RH

System Outline

* The SRS airbag are provided for the driver and front passenger. The SRS airbags have been designed to help reducing the shocks to the heads and chests of the driver and front passenger in the event of a severe frontal impact collision as supplements to the seat belts.
  This system is a 3–sensor type airbag system to detect the impact during a front collision using the center airbag sensor assembly and airbag sensor front LH, RH, and to make the airbag system and pretensioner operate as well.
* In this system, a front side collision is detected by the side airbag sensor front LH, RH in order to simultaneously deploy the side and curtain shield airbags. A rear side collision is detected by the side airbag sensor rear LH, RH in order to deploy only the curtain shield airbag.
* Roll sensing of curtain shield airbags control has been adopted in order to deploy the curtain shield airbags and the pretensioners for the driver and front passenger, in the event that the vehicle rolls over.
  A roll sensing of curtain shield airbags cutoff SW is provided on the driver side of the instrument panel to enable the driver to disable this system.
* Dual–stage SRS airbags system, that controls the airbag inflating output optimum by judging the extent of impact and seat position (Driver seat), has been used for the driver and front passenger airbags.
* In accordance with the adoption of the dual–stage SRS airbag system, a seat position sensor has been established for the driver seat.
* This system has adopted a fuel cut control that stops the fuel pump when the airbag is deployed.
* Passenger occupant classification system detects a passenger in the passenger seat and controls to deploy airbag of the passenger seat appropriately.

: Parts Location

Code		See Page	Code		See Page	Code	See Page
A11		36	C17		42	O7	46
A12		36	C18		42	O8	46
A27	A	38	D3		39	P14	44
A28	B	38	E8		39	P15	44
A29	C	38	J11		40	P28	40
A30		38	J13		40	R30	41
A31		38	J15		40	S21	45
B12		46	J19		40	S22	45
B16		46	O3	A	46	S23	45
C9	A	38	O4	B	46	S24	45
C11	C	38	O5		46	S31	46
C12	D	38	O6		46	S32	46

: Relay Blocks

Code	See Page	Relay Blocks (Relay Block Location)
2	22	Engine Room R/B (Engine Compartment Left)

: Junction Block and Wire Harness Connector

Code	See Page	Junction Block and Wire Harness (Connector Location)
IB	26	Engine Room Main Wire and Driver Side J/B (Lower Finish Panel)
IG	27	Instrument Panel Wire and Driver Side J/B (Lower Finish Panel)
IJ		
IL		
1A	30	Instrument Panel Wire and J/B No.1 (Instrument Panel Reinforcement Left)
1B		
1C		
2A	32	Instrument Panel Wire and J/B No.2 (Instrument Panel Reinforcement Center)
2B		
2D		

: **Connector Joining Wire Harness and Wire Harness**

Code	See Page	Joining Wire Harness and Wire Harness (Connector Location)
IB1	50	Instrument Panel Wire and Engine Room Main Wire (Left Kick Panel)
IO1	54	Engine Wire and Instrument Panel Wire (Right Side of the Blower Unit)
IP1	54	Instrument Panel Wire and Engine Room Main Wire (Right Kick Panel)
IR3	56	Instrument Panel Wire and Floor Wire (Right Kick Panel)
BM1	62	Floor Wire and Front Seat RH Wire (Under the Front Passenger's Seat)

: **Ground Points**

Code	See Page	Ground Points Location
EG	48	Rear Bank of Left Cylinder Head
IH	50	Left Kick Panel
II	50	Near the Left Side of Steering Column
IK	50	Instrument Panel Brace LH
BN	58	Under the Front Passenger's Seat

: **Splice Points**

Code	See Page	Wire Harness with Splice Points	Code	See Page	Wire Harness with Splice Points
I2	52	Instrument Panel Wire			

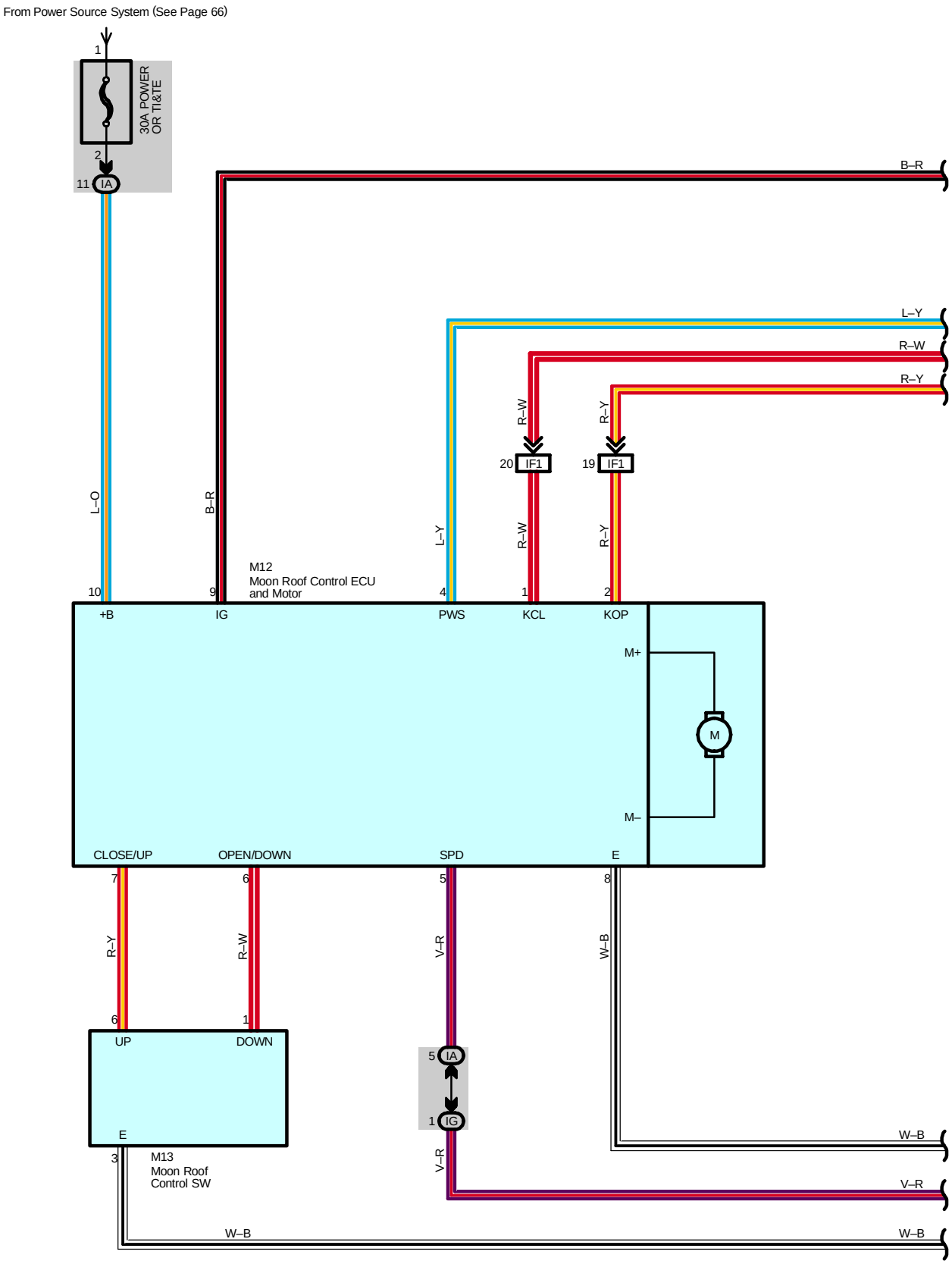
From Power Source System (See Page 66)
1
30A POWER OR TI&TE
2
11 IA
B–R
L–Y
R–W
R–Y
R–W
R–Y
20 IF1
19 IF1
L–O
B–R
L–Y
R–W
R–Y
M12
Moon Roof Control ECU and Motor
10
9
4
1
2
+B
IG
PWS
KCL
KOP
M+
M
M–
CLOSE/UP
OPEN/DOWN
SPD
E
7
6
5
8
R–Y
R–W
V–R
W–B
6
1
UP
DOWN
5 IA
1 IG
E
3
M13
Moon Roof Control SW
V–R
W–B
V–R
W–B
W–B

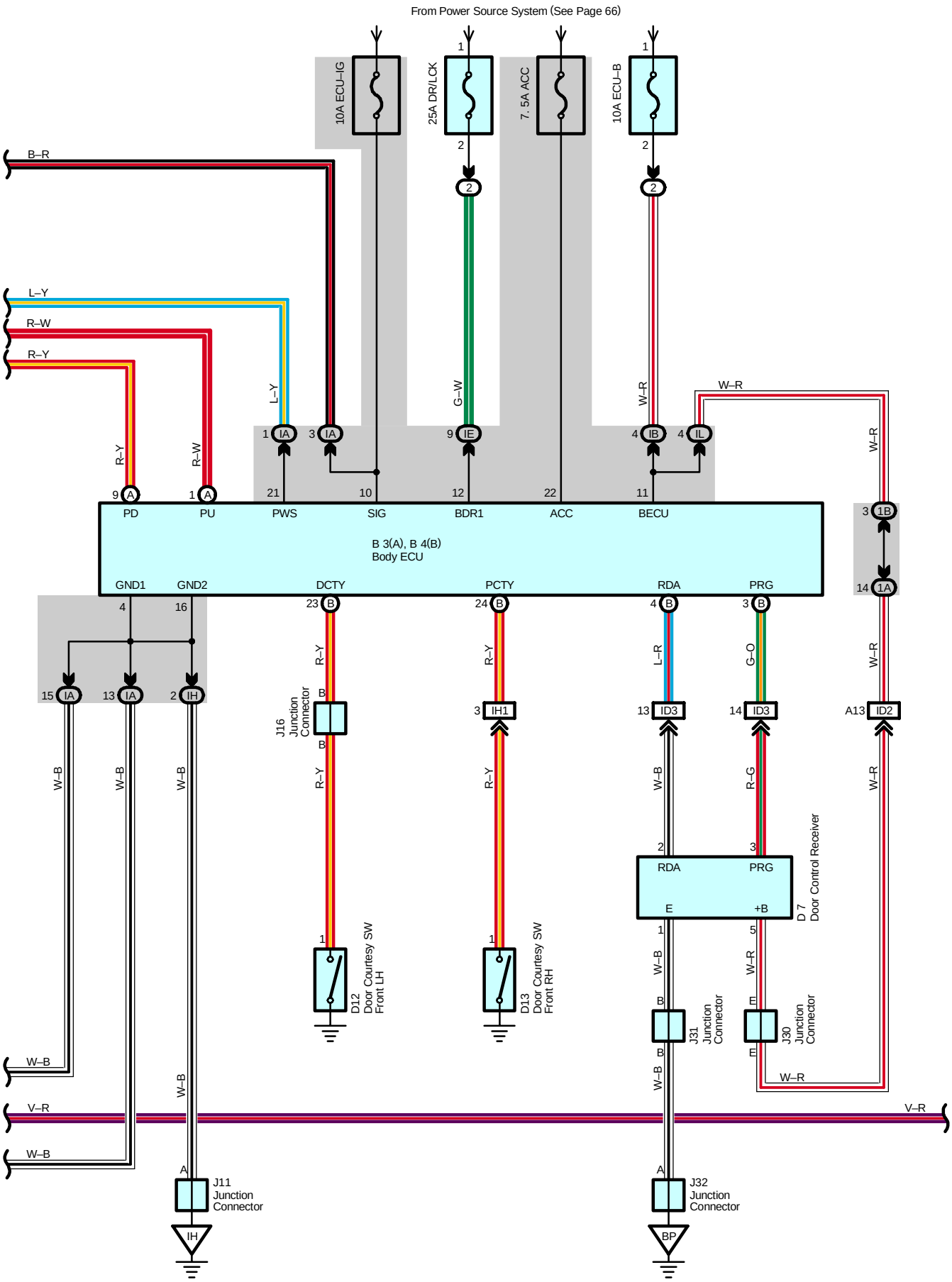
From Power Source System (See Page 66)
10A ECU–IG
25A DR/LCK
7.5A ACC
10A ECU–B
B–R
L–Y
R–W
R–Y
G–W
W–R
PD
PU
PWS
SIG
BDR1
ACC
BECU
B 3(A), B 4(B)
Body ECU
GND1
GND2
DCTY
PCTY
RDA
PRG
J16 Junction Connector
D12 Door Courtesy SW Front LH
D13 Door Courtesy SW Front RH
L–R
G–O
R–G
W–B
V–R
D 7 Door Control Receiver
J31 Junction Connector
J30 Junction Connector
J11 Junction Connector
J32 Junction Connector
IH
BP

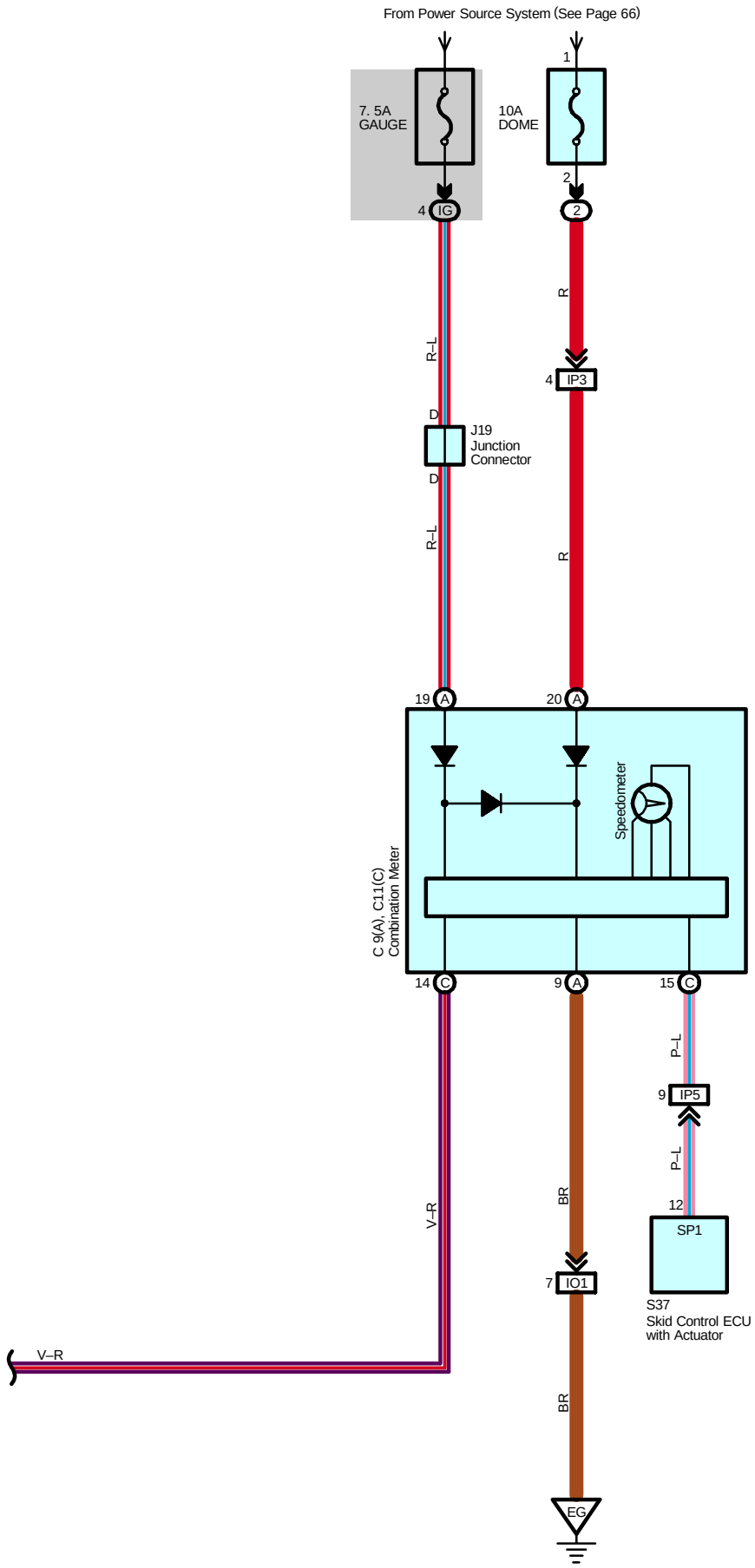
From Power Source System (See Page 66)
7. 5A
GAUGE
10A
DOME
1
2
4 IG
2
R
R–L
4 IP3
D
J19
Junction
Connector
D
R–L
R
19 A
20 A
Speedometer
C 9(A), C11(C)
Combination Meter
14 C
9 A
15 C
P–L
9 IP5
P–L
12
SP1
S37
Skid Control ECU
with Actuator
V–R
BR
7 IO1
V–R
BR
EG

System Outline

Current is always applied from the POWER fuse to TERMINAL 10 of the moon roof control ECU and motor. With the ignition SW turned on, the current flows to TERMINAL 9 of the moon roof control ECU and motor.

1. Moon Roof Open/Close Operation

For moon roof operation, there are moon roof control switches: ”Slide open/tilt down”; and ”Slide close/tilt up.” When a switch is pressed and held down for a certain period of time, one touch automatic operation takes place in accordance with the function of the switch.

2. Key–Off Operation

Roof remains operable – until about 45 seconds elapse after the ignition SW is turned from ON to OFF or until the driver’s seat door is opened and closed, whichever first occurs.
However, if an overload reverse operation was going on at that time, the key–off operation continues until it comes to an end.

3. Overload Reverse Operation

The moon roof control ECU and motor detects jamming of the moon roof by foreign material, if occurred, from abnormal motor speed signal and reverses the moon roof operation.

4. Deflector Control Function

When the roof is slid fully open, the moon roof control ECU and motor automatically adjusts the height of deflector in accordance with the vehicle cruising speed.

∗ When the battery terminal or fuse is disconnected, the roof position has to be reset to its initial position by the moon roof control SW in accordance with the following procedure:

(1) Reconnect the battery terminal or fuse.

(2) Turn ON the ignition switch.

(3) Operate the moon roof control SW to open the roof halfway or more.

(4) Then operate the moon roof control SW to fully close the roof.
Do not release the switch for at least one second after the roof is fully closed.

Service Hints

M12 Moon Roof Control ECU and Motor

9–Ground : Approx. 12 volts with the ignition SW at ON position
10–Ground : Always approx. 12 volts
8–Ground : Always continuity

: Parts Location

Code		See Page	Code	See Page	Code	See Page
B3	A	38	D13	42	J32	43
B4	B	38	J11	40	M12	44
C9	A	38	J16	40	M13	44
C11	C	38	J19	40	S37	37
D7		42	J30	43		
D12		42	J31	43		

: Relay Blocks

Code	See Page	Relay Blocks (Relay Block Location)
2	22	Engine Room R/B (Engine Compartment Left)

: **Junction Block and Wire Harness Connector**

Code	See Page	Junction Block and Wire Harness (Connector Location)
IA	26	Roof Wire and Driver Side J/B (Lower Finish Panel)
IB	26	Engine Room Main Wire and Driver Side J/B (Lower Finish Panel)
IE		
IG	27	Instrument Panel Wire and Driver Side J/B (Lower Finish Panel)
IH		
IL		
1A	30	Instrument Panel Wire and J/B No.1 (Instrument Panel Reinforcement Left)
1B		

: **Connector Joining Wire Harness and Wire Harness**

Code	See Page	Joining Wire Harness and Wire Harness (Connector Location)
ID2	50	Instrument Panel Wire and Floor No.2 Wire (Left Kick Panel)
ID3		
IF1	52	Roof Wire and Instrument Panel Wire (Upper the Driver Side J/B)
IH1	52	Instrument Panel Wire and Instrument Panel Wire (Near the J/B No.1)
IO1	54	Engine Wire and Instrument Panel Wire (Right Side of the Blower Unit)
IP3	54	Instrument Panel Wire and Engine Room Main Wire (Right Kick Panel)
IP5		

: **Ground Points**

Code	See Page	Ground Points Location
EG	48	Rear Bank of Left Cylinder Head
IH	50	Left Kick Panel
BP	58	Left Quarter Panel Inner

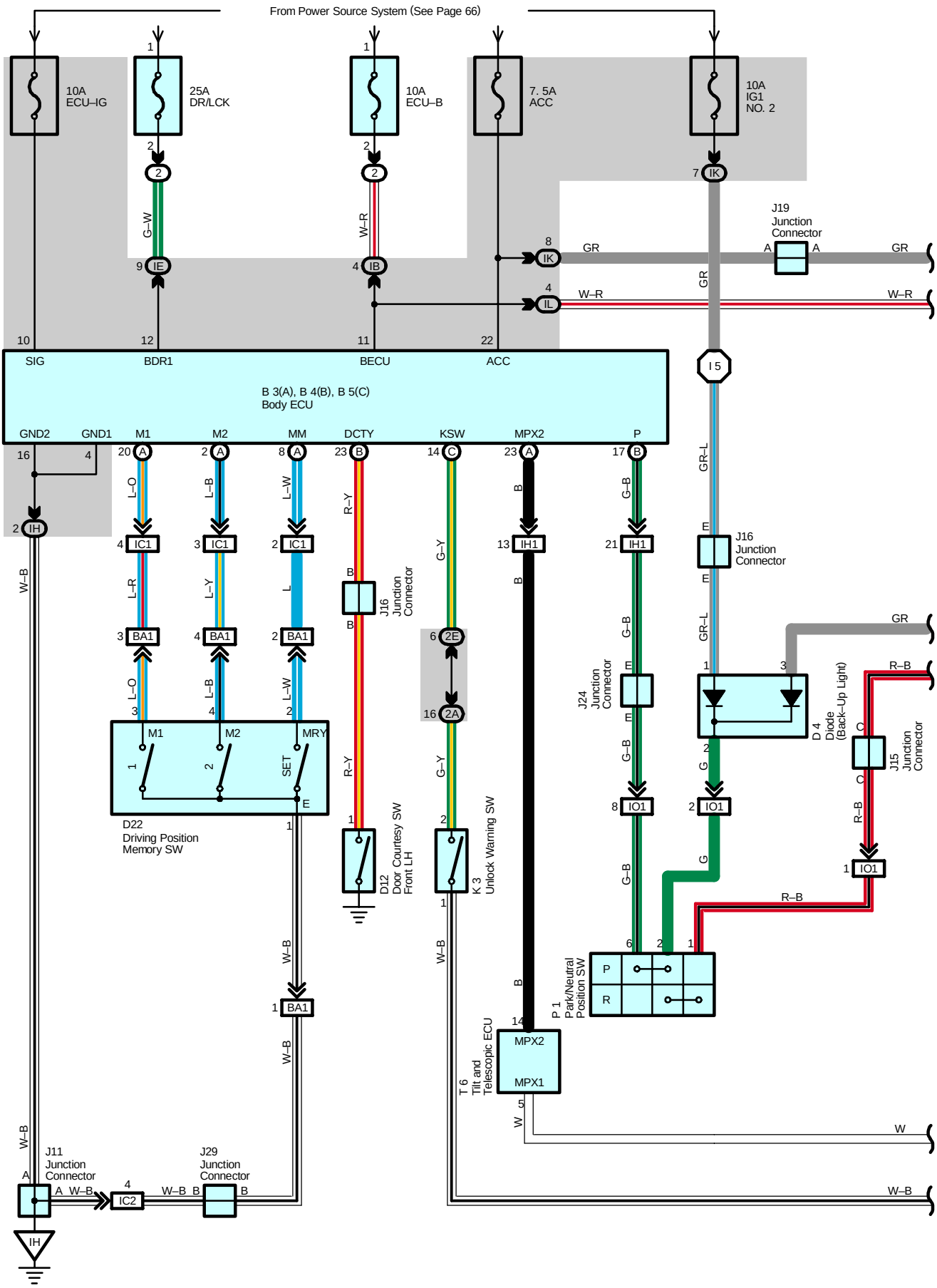
From Power Source System (See Page 66)
10A ECU–IG
25A DR/LCK
10A ECU–B
7. 5A ACC
10A IG1 NO. 2
J19 Junction Connector
SIG
BDR1
BECU
ACC
B 3(A), B 4(B), B 5(C) Body ECU
GND2
GND1
M1
M2
MM
DCTY
KSW
MPX2
P
D22 Driving Position Memory SW
J16 Junction Connector
D12 Door Courtesy SW Front LH
K 3 Unlock Warning SW
J24 Junction Connector
D 4 Diode (Back–Up Light)
J15 Junction Connector
P 1 Park/Neutral Position SW
T 6 Tilt and Telescopic ECU
J11 Junction Connector
J29 Junction Connector

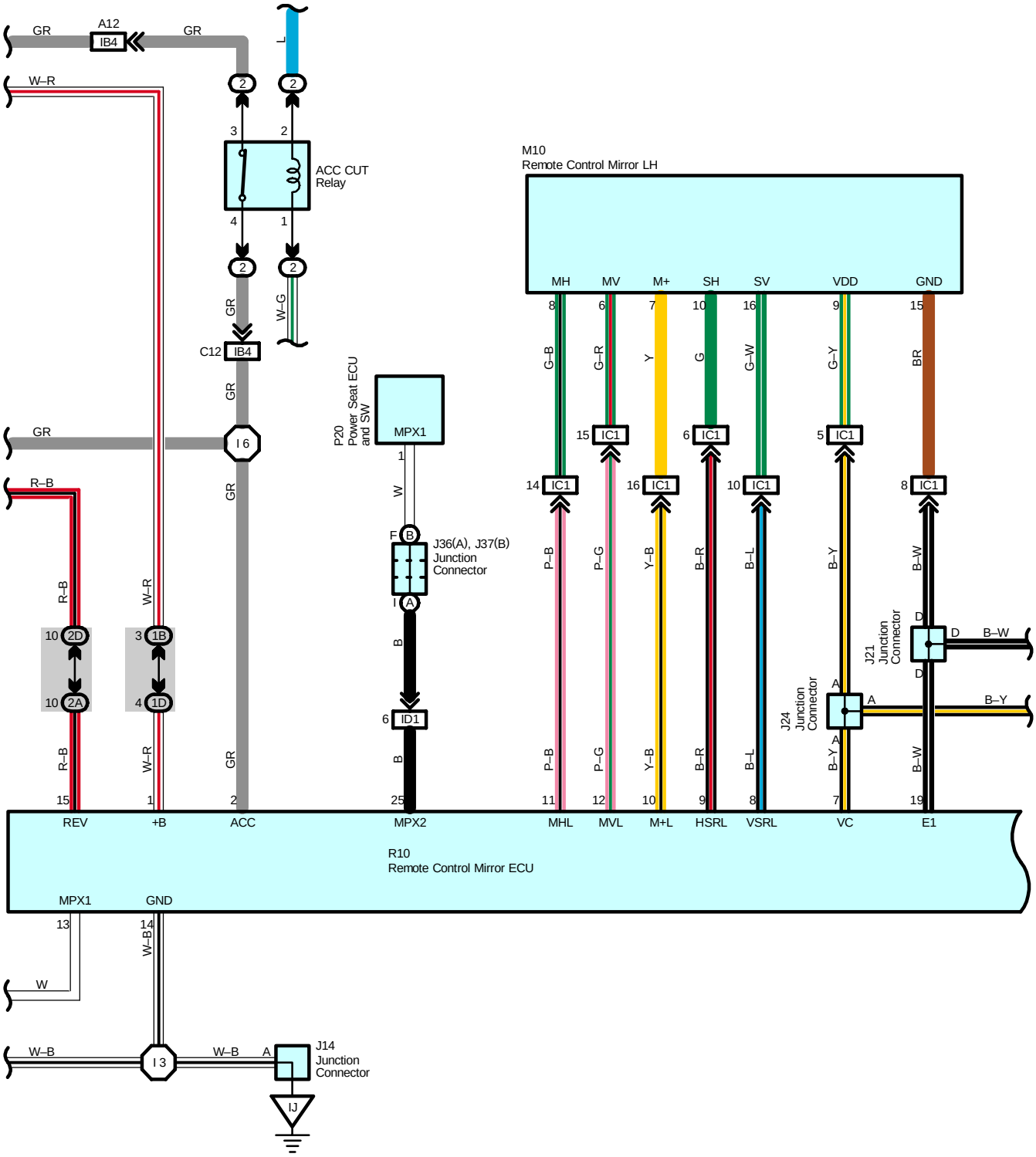
GR
A12
IB4
GR
L
W–R
ACC CUT
Relay
W–G
C12
IB4
GR
I 6
R–B
P20
Power Seat ECU
and SW
MPX1
J36(A), J37(B)
Junction
Connector
ID1
M10
Remote Control Mirror LH
MH
MV
M+
SH
SV
VDD
GND
IC1
G–B
G–R
Y
G
G–W
G–Y
BR
P–B
P–G
Y–B
B–R
B–L
B–Y
B–W
J21
Junction
Connector
J24
Junction
Connector
REV
+B
ACC
MPX2
MHL
MVL
M+L
HSRL
VSRL
VC
E1
R10
Remote Control Mirror ECU
MPX1
GND
W
W–B
I 3
J14
Junction
Connector
IJ

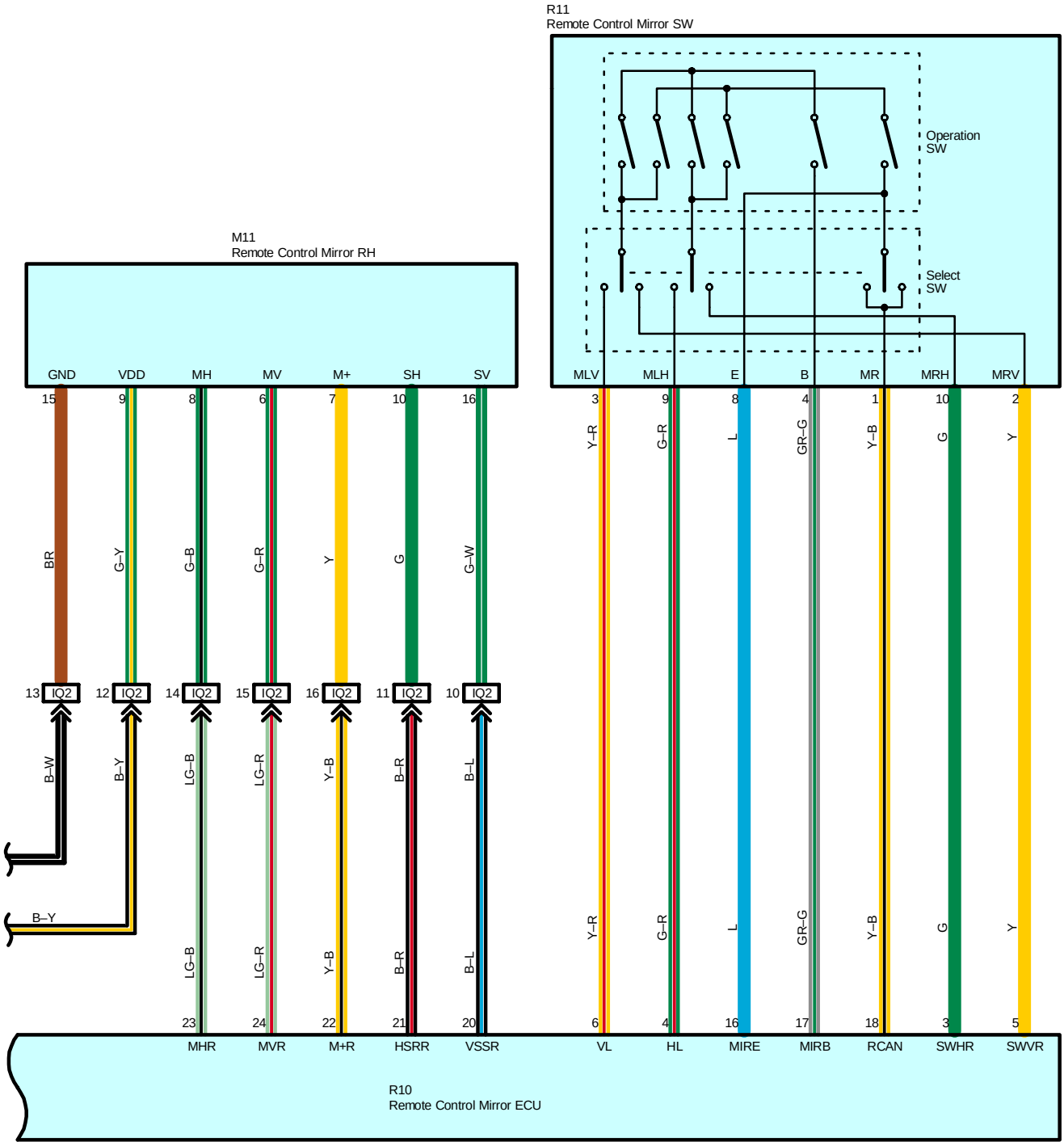
R11
Remote Control Mirror SW
Operation SW
Select SW
M11
Remote Control Mirror RH
GND
VDD
MH
MV
M+
SH
SV
MLV
MLH
E
B
MR
MRH
MRV
15
9
8
6
7
10
16
3
9
8
4
1
10
2
BR
G–Y
G–B
G–R
Y
G
G–W
Y–R
G–R
L
GR–G
Y–B
G
Y
13 IQ2
12 IQ2
14 IQ2
15 IQ2
16 IQ2
11 IQ2
10 IQ2
B–W
B–Y
LG–B
LG–R
Y–B
B–R
B–L
B–Y
LG–B
LG–R
Y–B
B–R
B–L
Y–R
G–R
L
GR–G
Y–B
G
Y
23
24
22
21
20
6
4
16
17
18
3
5
MHR
MVR
M+R
HSRR
VSSR
VL
HL
MIRE
MIRB
RCAN
SWHR
SWVR
R10
Remote Control Mirror ECU

System Outline

When the ignition SW is turned on, the outer mirrors can be operated. When the remote control mirror SW is operated, a signal is input to the remote control mirror ECU, and the outer mirror can be adjusted to the desired position.
In this system, the position sensor detects the number of rotations of each motor (Movement amount of each mirror) and inputs it to the remote control mirror ECU. This makes it possible to store and recall the outer mirror position using the driving position memory SW. The outer mirror position is stored and recalled through communication control of the body ECU.
When the remote control mirror SW (Select SW) is moved to the left side from neutral position, while the ignition SW is on and the shift lever is in R position, the outer mirror LH, RH moves downward a little bit. In this case, it is not necessary to operate the remote control mirror SW for approx. 120 seconds.

Service Hints

R10 Remote Control Mirror ECU

1–Ground : Always approx. 12 volts
2–Ground : Approx. 12 volts with the ignition SW at ON or ACC position
14–Ground : Always continuity

: Parts Location

Code		See Page	Code		See Page	Code	See Page
B3	A	38	J15		40	K3	40
B4	B	38	J16		40	M10	44
B5	C	38	J19		40	M11	44
D4		39	J21		40	P1	37
D12		42	J24		40	P20	46
D22		42	J29		43	R10	41
J11		40	J36	A	46	R11	41
J14		40	J37	B	46	T6	41

: Relay Blocks

Code	See Page	Relay Blocks (Relay Block Location)
2	22	Engine Room R/B (Engine Compartment Left)

: Junction Block and Wire Harness Connector

Code	See Page	Junction Block and Wire Harness (Connector Location)
IB	26	Engine Room Main Wire and Driver Side J/B (Lower Finish Panel)
IE		
IH	27	Instrument Panel Wire and Driver Side J/B (Lower Finish Panel)
IK		
IL		
1B	30	Instrument Panel Wire and J/B No.1 (Instrument Panel Reinforcement Left)
1D		
2A	32	Instrument Panel Wire and J/B No.2 (Instrument Panel Reinforcement Center)
2D		
2E		

: Connector Joining Wire Harness and Wire Harness

Code	See Page	Joining Wire Harness and Wire Harness (Connector Location)
IB4	50	Instrument Panel Wire and Engine Room Main Wire (Left Kick Panel)
IC1	50	Front Door LH Wire and Instrument Panel Wire (Left Kick Panel)
IC2		
ID1	50	Instrument Panel Wire and Floor No.2 Wire (Left Kick Panel)
IH1	52	Instrument Panel Wire and Instrument Panel Wire (Near the J/B No.1)
IO1	54	Engine Wire and Instrument Panel Wire (Right Side of the Blower Unit)
IQ2	56	Front Door RH Wire and Instrument Panel Wire (Right Kick Panel)
BA1	58	Front Door LH Wire and Front Door LH Sub Wire (Inside of Front Door LH)

Remote Control Mirror

▽ : **Ground Points**

Code	See Page	Ground Points Location
IH	50	Left Kick Panel
IJ	50	Near the Right Side of Steering Column

⬡ : **Splice Points**

Code	See Page	Wire Harness with Splice Points	Code	See Page	Wire Harness with Splice Points
I3	52	Instrument Panel Wire	I6	52	Instrument Panel Wire
I5					

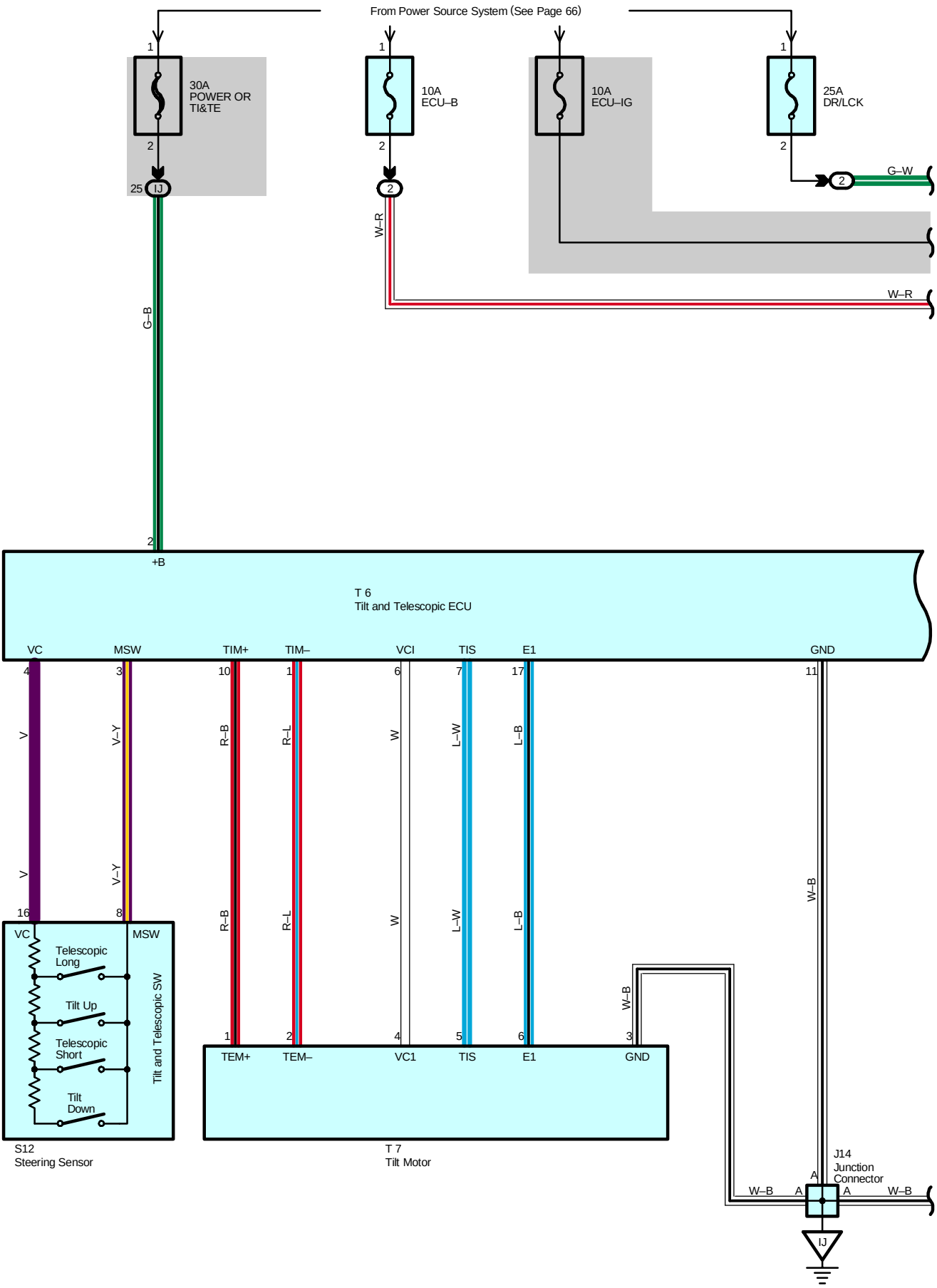
From Power Source System (See Page 66)
30A
POWER OR
TI&TE
10A
ECU–B
10A
ECU–IG
25A
DR/LCK
G–W
W–R
W–R
G–B
+B
T 6
Tilt and Telescopic ECU
VC
MSW
TIM+
TIM–
VCI
TIS
E1
GND
V
V–Y
R–B
R–L
W
L–W
L–B
W–B
Telescopic
Long
Tilt Up
Telescopic
Short
Tilt
Down
Tilt and Telescopic SW
S12
Steering Sensor
TEM+
TEM–
VC1
T 7
Tilt Motor
J14
Junction
Connector
IJ

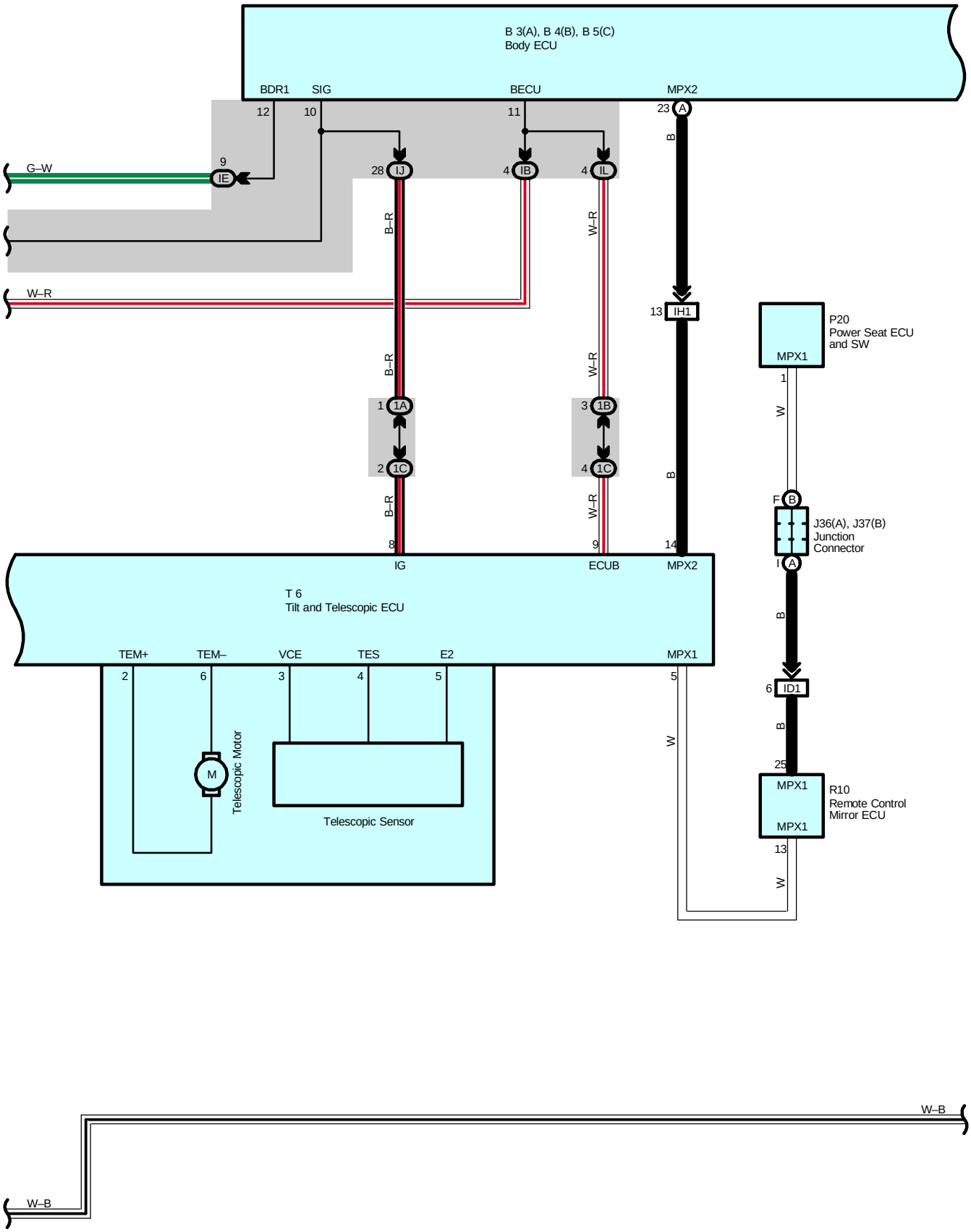
B 3(A), B 4(B), B 5(C)
Body ECU
BDR1
SIG
BECU
MPX2
12
10
11
23
A
B
G–W
9
IE
28
IJ
4
IB
4
IL
B–R
W–R
W–R
W–R
13
IH1
P20
Power Seat ECU
and SW
MPX1
1
W
1
1A
2
1C
3
1B
4
1C
B
F
B
J36(A), J37(B)
Junction
Connector
1
A
B–R
W–R
8
9
14
IG
ECUB
MPX2
T 6
Tilt and Telescopic ECU
TEM+
TEM–
VCE
TES
E2
MPX1
2
6
3
4
5
5
6
ID1
B
W
B
25
M
Telescopic Motor
Telescopic Sensor
MPX1
R10
Remote Control
Mirror ECU
MPX1
13
W
W–B
W–B

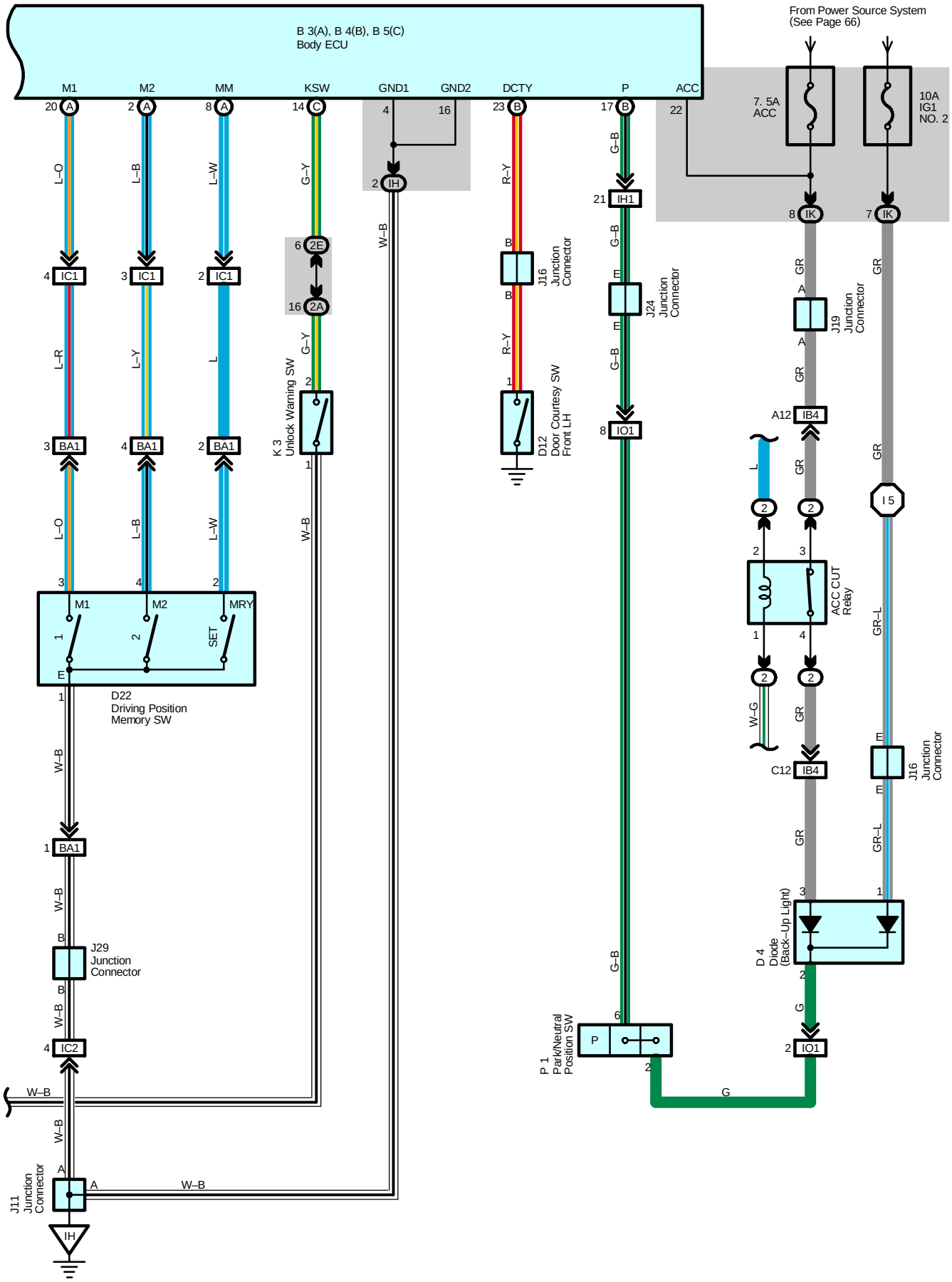
B 3(A), B 4(B), B 5(C)
Body ECU
From Power Source System
(See Page 66)
M1
M2
MM
KSW
GND1
GND2
DCTY
P
ACC
7. 5A
ACC
10A
IG1
NO. 2
IC1
BA1
IC2
IH
IH1
IO1
IK
IB4
2E
2A
K 3
Unlock Warning SW
D22
Driving Position
Memory SW
J29
Junction
Connector
J11
Junction
Connector
J16
Junction
Connector
D12
Door Courtesy SW
Front LH
J24
Junction
Connector
J19
Junction
Connector
ACC CUT
Relay
I 5
J16
Junction
Connector
D 4
Diode
(Back–Up Light)
P 1
Park/Neutral
Position SW
L–O
L–B
L–W
G–Y
R–Y
G–B
L–R
L–Y
L
W–B
W–G
GR
GR–L
G

System Outline

This system provides the automatic tilt and telescopic mechanisms using the motor drive, tilt and telescopic ECU control, allowing variable steering movement in the back and forth, and vertical directions. This makes it possible to set the steering to the desired steering position, and move the steering to a position where the driver can easily get off the vehicle, allowing easier seating. Additionally, by linking the power seat and remote control mirror, an optimal driving position corresponding to the driver's needs can be stored into the memory.

1. Auto Return Operation

When the ignition key is inserted into the key cylinder (Unlock warning SW on), a signal is input to the tilt and telescopic ECU through communication control of the body ECU etc. This activates the tilt and telescopic ECU to automatically return the steering to the position set before the ignition key has been removed.

2. Auto Away Operation

When the ignition key is turned from on to off and removed from the key cylinder (Unlock warning SW off), a signal is input to the tilt and telescopic ECU through communication control of the body ECU etc. This activates the tilt and telescopic ECU to automatically move the steering to the top tilt step position and maximum telescopic retract position.

3. Driving Position Memory Function

The pulse signals detected by the tilt and telescopic sensors are input to the tilt and telescopic ECU. This makes it possible to store and recall the desired driving position through communication control of the body ECU.

Service Hints

T6 Tilt and Telescopic ECU

2, 9–Ground : Always approx. 12 volts
8–Ground : Approx. 12 volts with the ignition SW at ON or ST position
11–Ground : Always continuity

S12 Steering Sensor

16–8 : Approx. 160 Ω with the telescopic long operation
: Approx. 360 Ω with the tilt up operation
: Approx. 790 Ω with the telescopic short operation
: Approx. 1.99 kΩ with the tilt down operation

: Parts Location

Code		See Page	Code		See Page	Code	See Page
B3	A	38	J14		40	K3	40
B4	B	38	J16		40	P1	37
B5	C	38	J19		40	P20	46
D4		39	J24		40	R10	41
D12		42	J29		43	S12	41
D22		42	J36	A	46	T6	41
J11		40	J37	B	46	T7	41

: Relay Blocks

Code	See Page	Relay Blocks (Relay Block Location)
2	22	Engine Room R/B (Engine Compartment Left)

: **Junction Block and Wire Harness Connector**

Code	See Page	Junction Block and Wire Harness (Connector Location)
IB	26	Engine Room Main Wire and Driver Side J/B (Lower Finish Panel)
IE		
IH	27	Instrument Panel Wire and Driver Side J/B (Lower Finish Panel)
IJ		
IK		
IL		
1A	30	Instrument Panel Wire and J/B No.1 (Instrument Panel Reinforcement Left)
1B		
1C		
2A	32	Instrument Panel Wire and J/B No.2 (Instrument Panel Reinforcement Center)
2E		

: **Connector Joining Wire Harness and Wire Harness**

Code	See Page	Joining Wire Harness and Wire Harness (Connector Location)
IB4	50	Instrument Panel Wire and Engine Room Main Wire (Left Kick Panel)
IC1	50	Front Door LH Wire and Instrument Panel Wire (Left Kick Panel)
IC2		
ID1	50	Instrument Panel Wire and Floor No.2 Wire (Left Kick Panel)
IH1	52	Instrument Panel Wire and Instrument Panel Wire (Near the J/B No.1)
IO1	54	Engine Wire and Instrument Panel Wire (Right Side of the Blower Unit)
BA1	58	Front Door LH Wire and Front Door LH Sub Wire (Inside of Front Door LH)

: **Ground Points**

Code	See Page	Ground Points Location
IH	50	Left Kick Panel
IJ	50	Near the Right Side of Steering Column

: **Splice Points**

Code	See Page	Wire Harness with Splice Points	Code	See Page	Wire Harness with Splice Points
I5	52	Instrument Panel Wire			

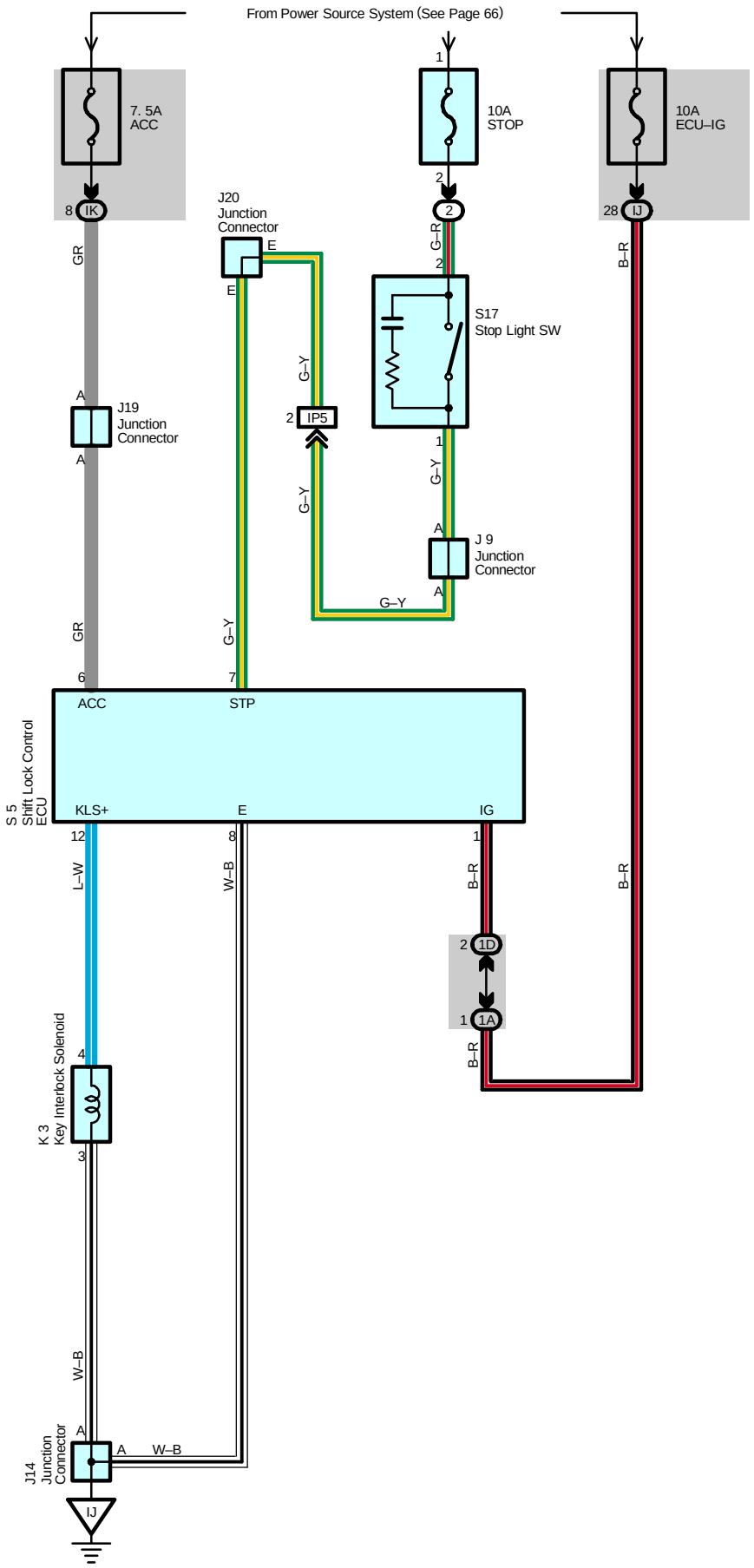
From Power Source System (See Page 66)
7. 5A
ACC
10A
STOP
10A
ECU–IG
8 IK
2
28 IJ
J20
Junction
Connector
E
E
G–R
2
S17
Stop Light SW
G–Y
A
J19
Junction
Connector
A
2 IP5
1
G–Y
G–Y
A
J 9
Junction
Connector
A
G–Y
GR
G–Y
GR
6
7
ACC
STP
S 5
Shift Lock Control
ECU
KLS+
E
IG
12
8
1
L–W
W–B
B–R
B–R
2 1D
1 1A
B–R
4
K 3
Key Interlock Solenoid
3
W–B
A
J14
Junction
Connector
A
W–B
IJ

System Outline

When the ignition SW is turned to ACC position the current from the ACC fuse flows to TERMINAL 6 of the shift lock control ECU. When the ignition SW is turned to ON position, the current from the ECU–IG fuse flows to TERMINAL 1 of the shift lock control ECU.

1. Shift Lock Mechanism

If the brake pedal is depressed with the ignition SW set at ON (The stop light SW is on), the shift lock control ECU is activated, allowing the driver to change the shift lever to a position other than the P position.

2. Key Interlock Mechanism

With the ignition SW at ON or ACC position, when the shift lever is put in P position, the current flowing from TERMINAL 12 of the shift lock control ECU to key interlock solenoid is cut off. This causes the key interlock solenoid to turn off (Lock lever disengages from LOCK position) and the ignition key can be turned from ACC to LOCK position.

Service Hints

S5 Shift Lock Control ECU

6–Ground : Approx. 12 volts with the ignition SW at ACC or ON position
1–Ground : Approx. 12 volts with the ignition SW at ON position
8–Ground : Always continuity
7–Ground : Approx. 12 volts with the brake pedal depressed

: Parts Location

Code	See Page	Code	See Page	Code	See Page
J9	40	J20	40	S17	41
J14	40	K3	40		
J19	40	S5	41		

: Relay Blocks

Code	See Page	Relay Blocks (Relay Block Location)
2	22	Engine Room R/B (Engine Compartment Left)

: Junction Block and Wire Harness Connector

Code	See Page	Junction Block and Wire Harness (Connector Location)
IJ	27	Instrument Panel Wire and Driver Side J/B (Lower Finish Panel)
IK		
1A	30	Instrument Panel Wire and J/B No.1 (Instrument Panel Reinforcement Left)
1D		

: Connector Joining Wire Harness and Wire Harness

Code	See Page	Joining Wire Harness and Wire Harness (Connector Location)
IP5	54	Instrument Panel Wire and Engine Room Main Wire (Right Kick Panel)

: Ground Points

Code	See Page	Ground Points Location
IJ	50	Near the Right Side of Steering Column

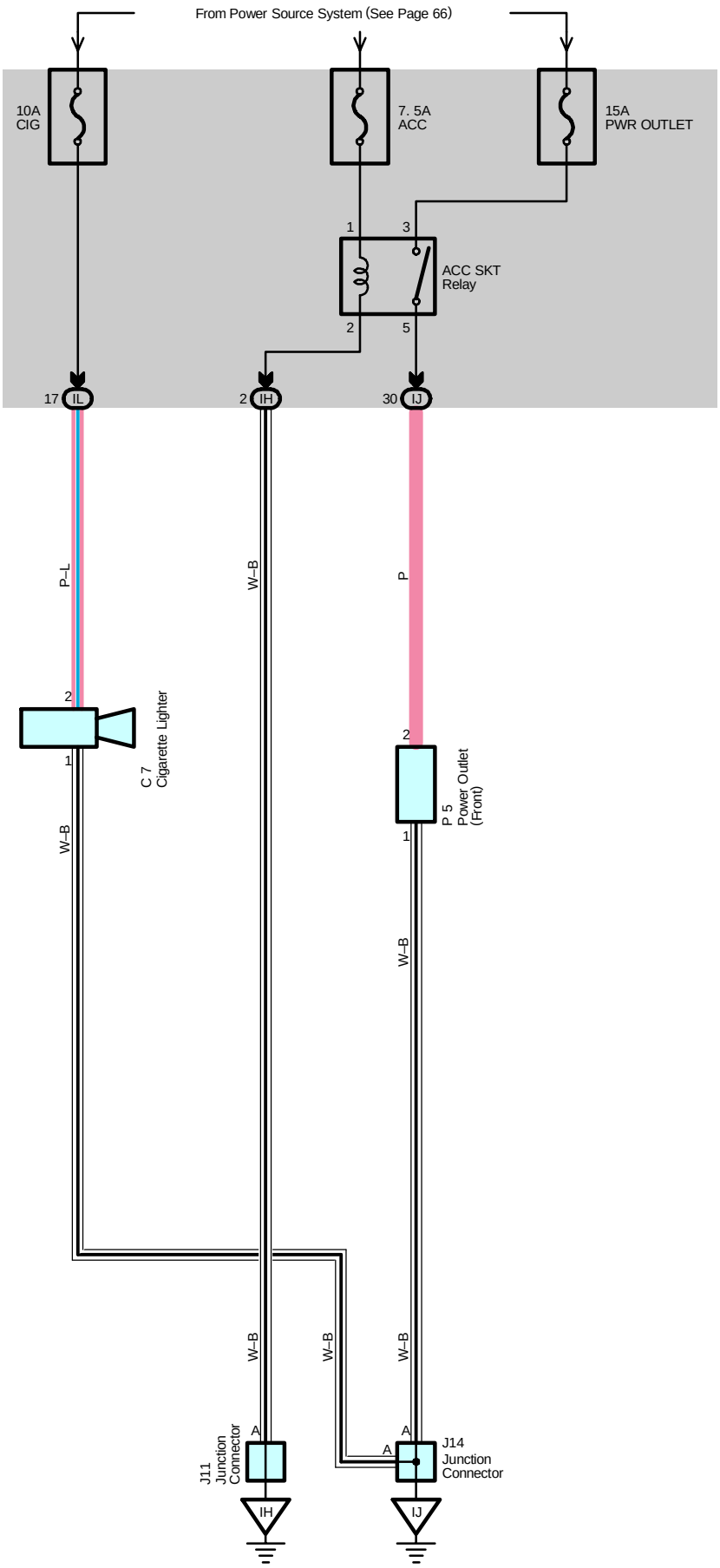
From Power Source System (See Page 66)
10A
CIG
7. 5A
ACC
15A
PWR OUTLET
1
3
ACC SKT
Relay
2
5
17
IL
2
IH
30
IJ
P–L
W–B
P
2
1
C 7
Cigarette Lighter
W–B
2
1
P 5
Power Outlet
(Front)
W–B
W–B
W–B
W–B
A
J11
Junction
Connector
IH
A
A
J14
Junction
Connector
IJ

Service Hints

C7 Cigarette Lighter

2–Ground : Approx. 12 volts with the ignition SW at ACC or ON position
1–Ground : Always continuity

P5 Power Outlet (Front)

2–Ground : Approx. 12 volts with the ignition SW at ACC or ON position
1–Ground : Always continuity

: Parts Location

Code	See Page	Code	See Page	Code	See Page
C7	38	J14	40		
J11	40	P5	40		

: Junction Block and Wire Harness Connector

Code	See Page	Junction Block and Wire Harness (Connector Location)
IH	27	Instrument Panel Wire and Driver Side J/B (Lower Finish Panel)
IJ		
IL		

: Ground Points

Code	See Page	Ground Points Location
IH	50	Left Kick Panel
IJ	50	Near the Right Side of Steering Column

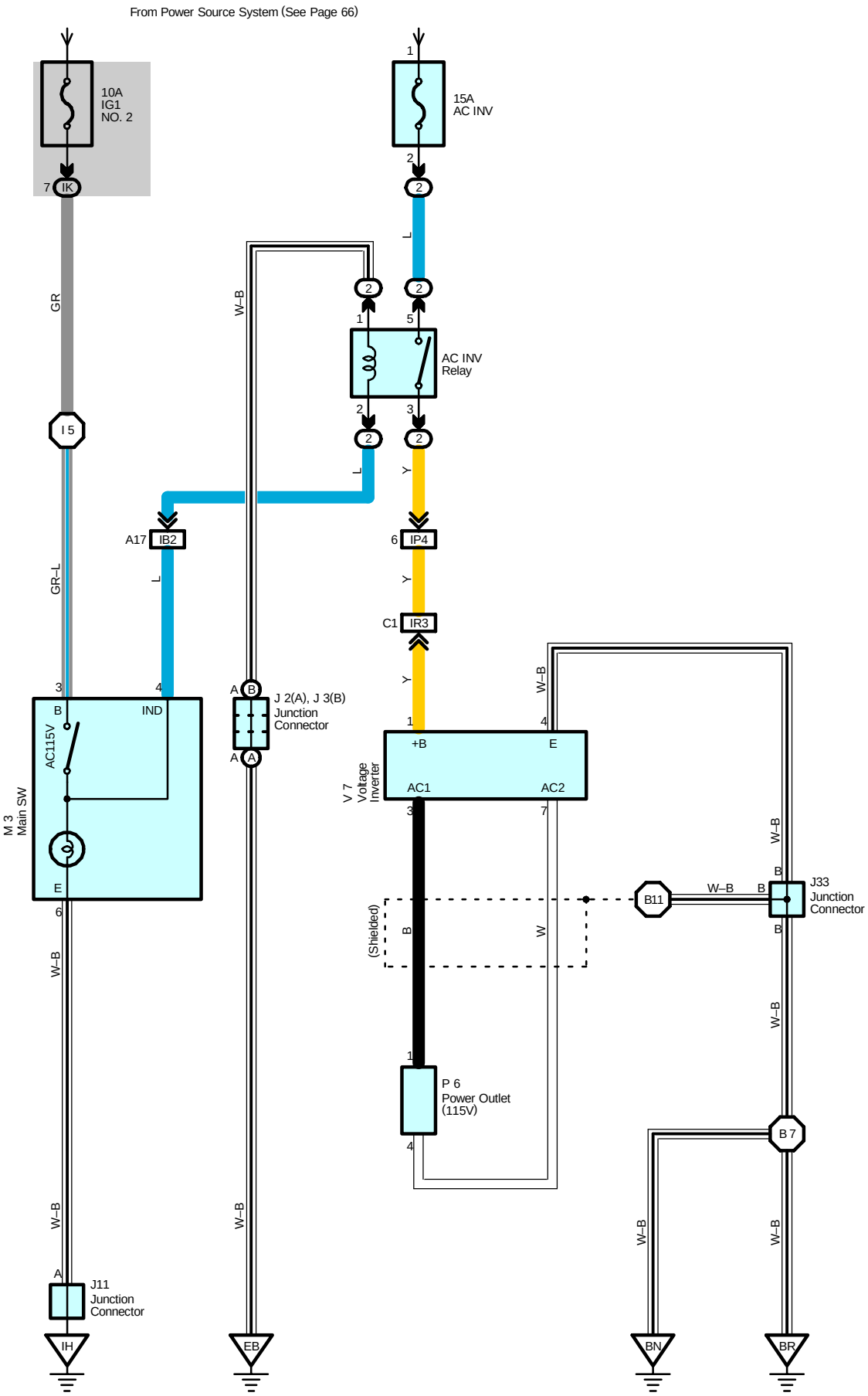
From Power Source System (See Page 66)
10A
IG1
NO. 2
15A
AC INV
AC INV
Relay
J 2(A), J 3(B)
Junction
Connector
M 3
Main SW
AC115V
IND
V 7
Voltage
Inverter
+B
E
AC1
AC2
(Shielded)
J33
Junction
Connector
P 6
Power Outlet
(115V)
J11
Junction
Connector
IH
EB
BN
BR

Service Hints

AC INV Relay

3–5 : Closed with the ignition SW at ON position and main SW at on

: Parts Location

Code		See Page	Code	See Page	Code	See Page
J2	A	37	J33	43	V7	45
J3	B	37	M3	40		
J11		40	P6	44		

: Relay Blocks

Code	See Page	Relay Blocks (Relay Block Location)
2	22	Engine Room R/B (Engine Compartment Left)

: Junction Block and Wire Harness Connector

Code	See Page	Junction Block and Wire Harness (Connector Location)
IK	27	Instrument Panel Wire and Driver Side J/B (Lower Finish Panel)

: Connector Joining Wire Harness and Wire Harness

Code	See Page	Joining Wire Harness and Wire Harness (Connector Location)
IB2	50	Instrument Panel Wire and Engine Room Main Wire (Left Kick Panel)
IP4	54	Instrument Panel Wire and Engine Room Main Wire (Right Kick Panel)
IR3	56	Instrument Panel Wire and Floor Wire (Right Kick Panel)

: Ground Points

Code	See Page	Ground Points Location
EB	48	Front Left Fender
IH	50	Left Kick Panel
BN	58	Under the Front Passenger's Seat
BR	58	Right Quarter Panel Inner

: Splice Points

Code	See Page	Wire Harness with Splice Points	Code	See Page	Wire Harness with Splice Points
I5	52	Instrument Panel Wire	B11	60	Floor Wire
B7	60	Floor Wire			

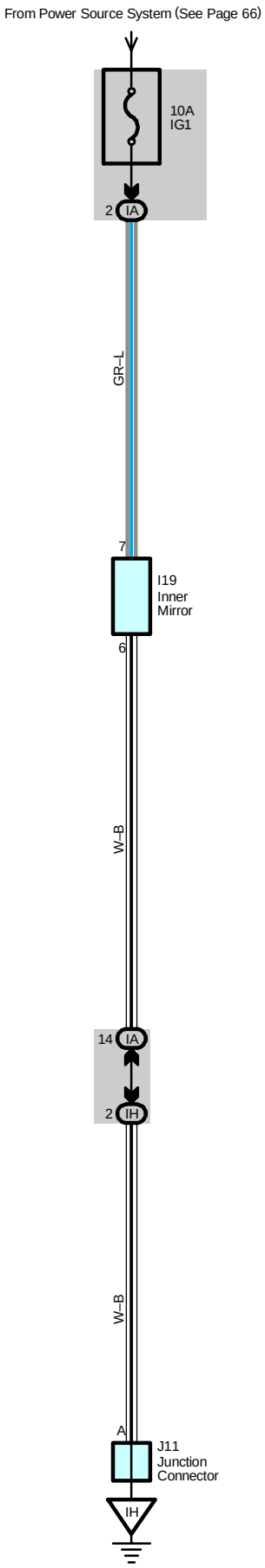
From Power Source System (See Page 66)
10A
IG1
2
IA
GR–L
7
I19
Inner
Mirror
6
W–B
14
IA
2
IH
W–B
A
J11
Junction
Connector
IH

Service Hints

I19 Inner Mirror

7–Ground : Approx. 12 volts with the ignition SW at ON position
6–Ground : Always continuity

: Parts Location

Code	See Page	Code	See Page	Code	See Page
I19	43	J11	40		

: Junction Block and Wire Harness Connector

Code	See Page	Junction Block and Wire Harness (Connector Location)
IA	26	Roof Wire and Driver Side J/B (Lower Finish Panel)
IH	27	Instrument Panel Wire and Driver Side J/B (Lower Finish Panel)

: Ground Points

Code	See Page	Ground Points Location
IH	50	Left Kick Panel

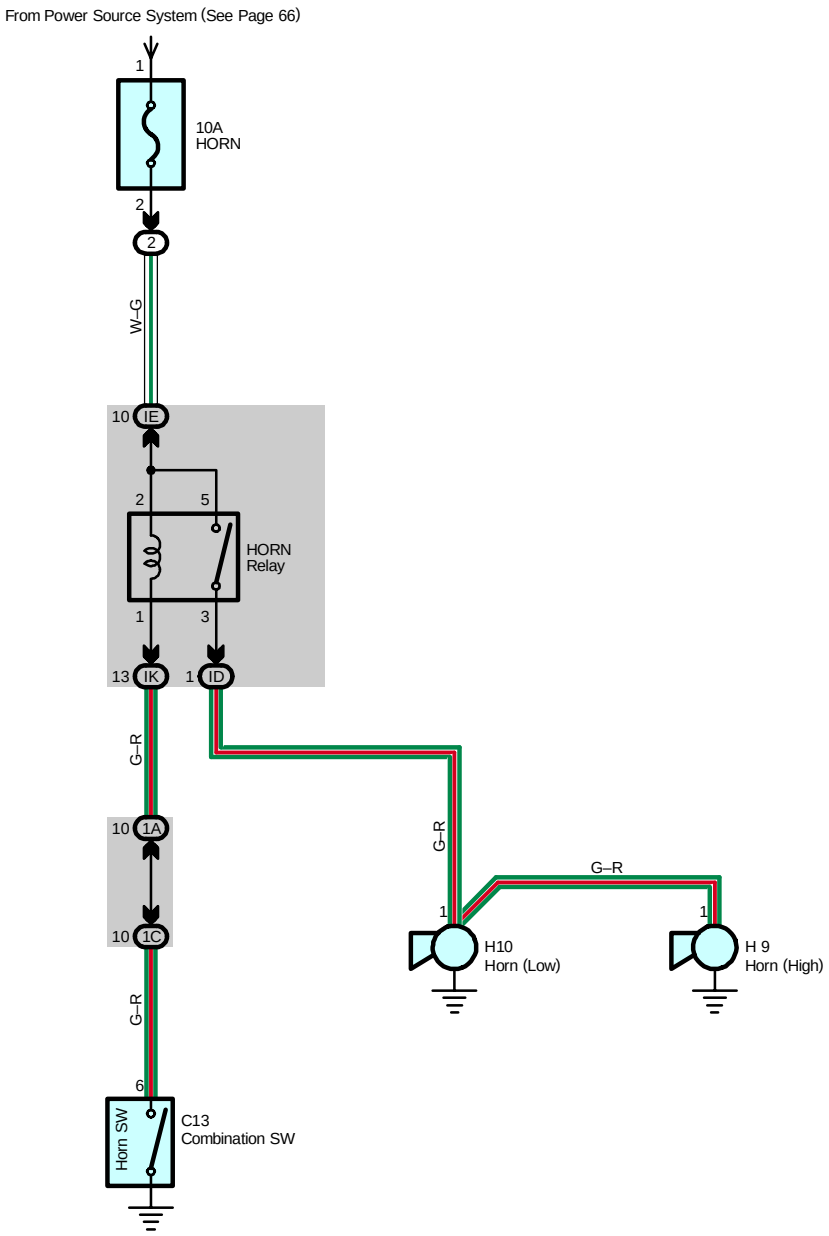
From Power Source System (See Page 66)
1
10A
HORN
2
2
W–G
10
IE
2
5
HORN
Relay
1
3
13
IK
1
ID
G–R
10
1A
10
1C
G–R
6
Horn SW
C13
Combination SW
G–R
G–R
1
1
H10
Horn (Low)
H 9
Horn (High)

Service Hints

HORN Relay

5–3 : Closed with the horn SW on

: Parts Location

Code	See Page	Code	See Page	Code	See Page
C13	38	H9	36	H10	36

: Relay Blocks

Code	See Page	Relay Blocks (Relay Block Location)
2	22	Engine Room R/B (Engine Compartment Left)

: Junction Block and Wire Harness Connector

Code	See Page	Junction Block and Wire Harness (Connector Location)
ID	26	Engine Room Main Wire and Driver Side J/B (Lower Finish Panel)
IE		
IK	27	Instrument Panel Wire and Driver Side J/B (Lower Finish Panel)
1A	30	Instrument Panel Wire and J/B No.1 (Instrument Panel Reinforcement Left)
1C		

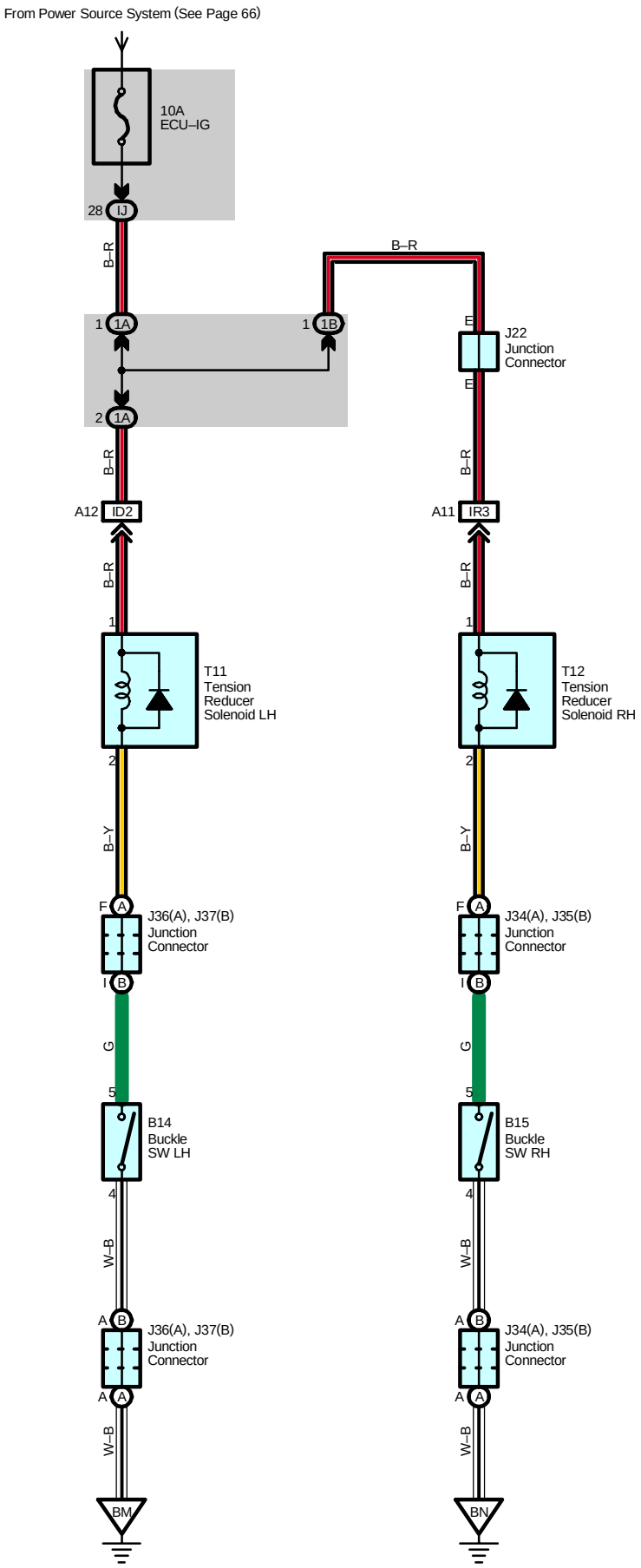
From Power Source System (See Page 66)
10A
ECU–IG
28
IJ
B–R
1
1A
2
1A
1
1B
B–R
E
J22
Junction
Connector
E
B–R
A12
ID2
A11
IR3
B–R
B–R
1
T11
Tension
Reducer
Solenoid LH
1
T12
Tension
Reducer
Solenoid RH
2
2
B–Y
B–Y
F
A
J36(A), J37(B)
Junction
Connector
I
B
F
A
J34(A), J35(B)
Junction
Connector
I
B
G
G
5
B14
Buckle
SW LH
5
B15
Buckle
SW RH
4
4
W–B
W–B
A
B
J36(A), J37(B)
Junction
Connector
A
A
A
B
J34(A), J35(B)
Junction
Connector
A
A
W–B
W–B
BM
BN

Service Hints

B14 Buckle SW LH

5–4 : Closed with the driver seat belt in use

B15 Buckle SW RH

5–4 : Closed with the front passenger seat Belt in use

T11, T12 Tension Reducer Solenoid LH, RH

1–Ground : Approx. 12 volts with the ignition SW at ON position

: Parts Location

Code	See Page	Code		See Page	Code		See Page
B14	46	J34	A	46	J37	B	46
B15	46	J35	B	46	T11		45
J22	40	J36	A	46	T12		45

: Junction Block and Wire Harness Connector

Code	See Page	Junction Block and Wire Harness (Connector Location)
IJ	27	Instrument Panel Wire and Driver Side J/B (Lower Finish Panel)
1A	30	Instrument Panel Wire and J/B No.1 (Instrument Panel Reinforcement Left)
1B		

: Connector Joining Wire Harness and Wire Harness

Code	See Page	Joining Wire Harness and Wire Harness (Connector Location)
ID2	50	Instrument Panel Wire and Floor No.2 Wire (Left Kick Panel)
IR3	56	Instrument Panel Wire and Floor Wire (Right Kick Panel)

: Ground Points

Code	See Page	Ground Points Location
BM	58	Under the Driver's Seat
BN	58	Under the Front Passenger's Seat

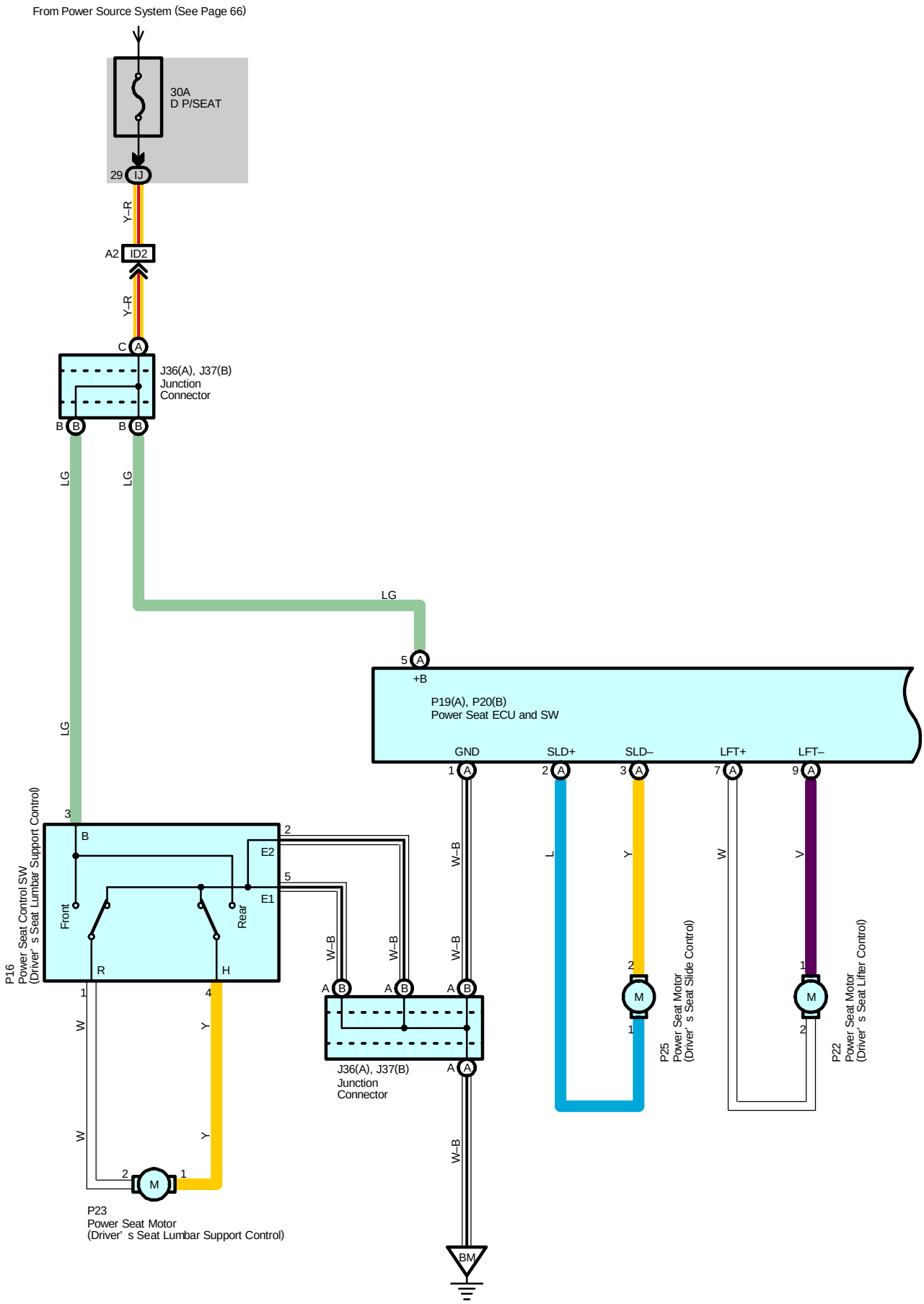
From Power Source System (See Page 66)
30A
D P/SEAT
29 IJ
Y–R
A2 ID2
Y–R
C A
J36(A), J37(B)
Junction
Connector
B B
B B
LG
LG
LG
LG
5 A
+B
P19(A), P20(B)
Power Seat ECU and SW
GND
SLD+
SLD–
LFT+
LFT–
1 A
2 A
3 A
7 A
9 A
3
B
2
E2
5
E1
Front
Rear
R
H
1
4
P16
Power Seat Control SW
(Driver' s Seat Lumbar Support Control)
W–B
W–B
W–B
W–B
L
Y
W
V
A B
A B
A B
A A
J36(A), J37(B)
Junction
Connector
W
Y
W
Y
2
1
M
P23
Power Seat Motor
(Driver' s Seat Lumbar Support Control)
W–B
BM
2
1
M
P25
Power Seat Motor
(Driver' s Seat Slide Control)
1
2
M
P22
Power Seat Motor
(Driver' s Seat Lifter Control)

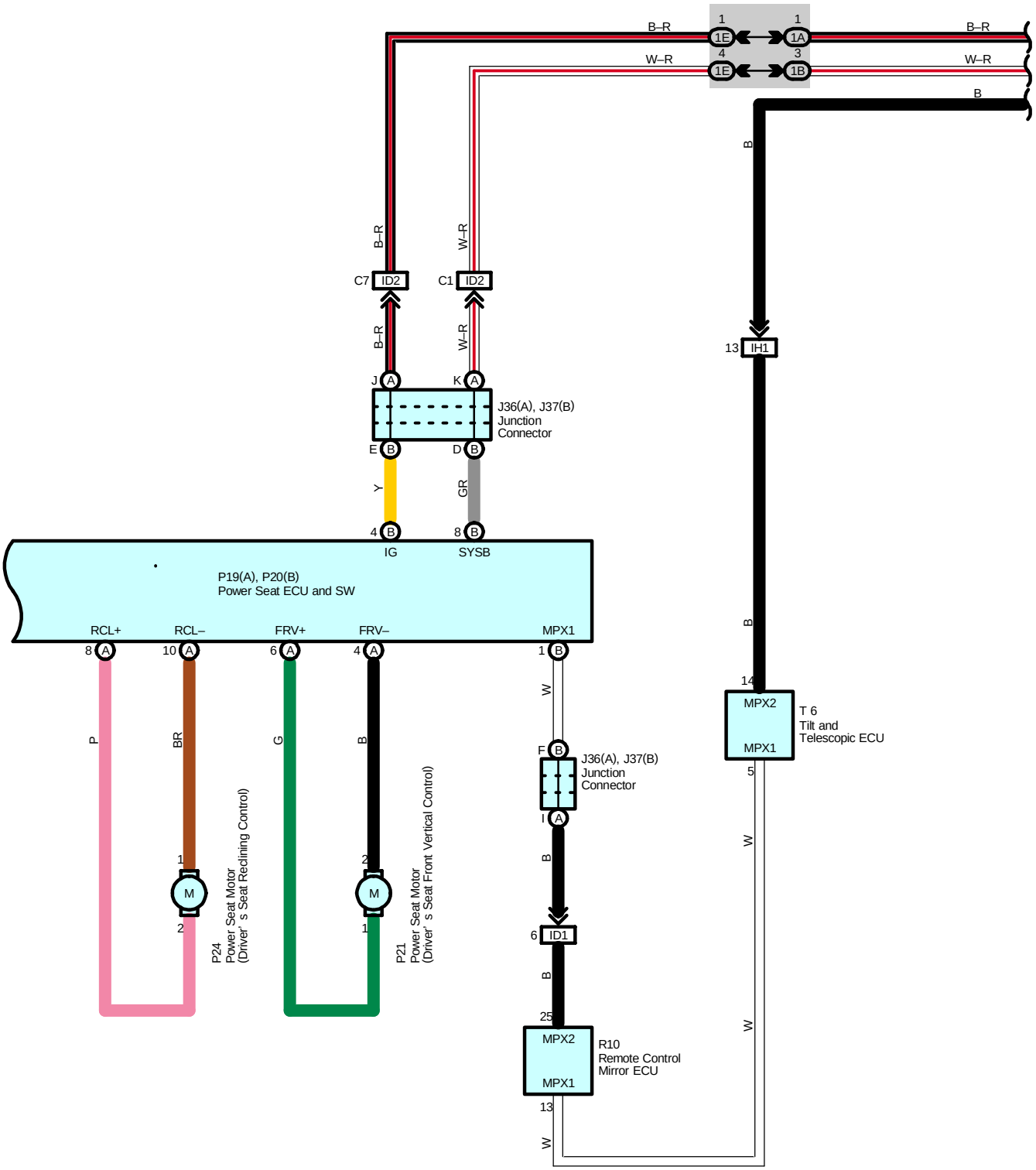

B–R
W–R
B
1E
1A
1B
C7
ID2
C1
ID2
J
K
J36(A), J37(B)
Junction
Connector
E
D
Y
GR
IG
SYSB
P19(A), P20(B)
Power Seat ECU and SW
RCL+
RCL–
FRV+
FRV–
MPX1
P
BR
G
B
W
P24
Power Seat Motor
(Driver' s Seat Reclining Control)
P21
Power Seat Motor
(Driver' s Seat Front Vertical Control)
M
F
I
ID1
MPX2
R10
Remote Control
Mirror ECU
IH1
T 6
Tilt and
Telescopic ECU

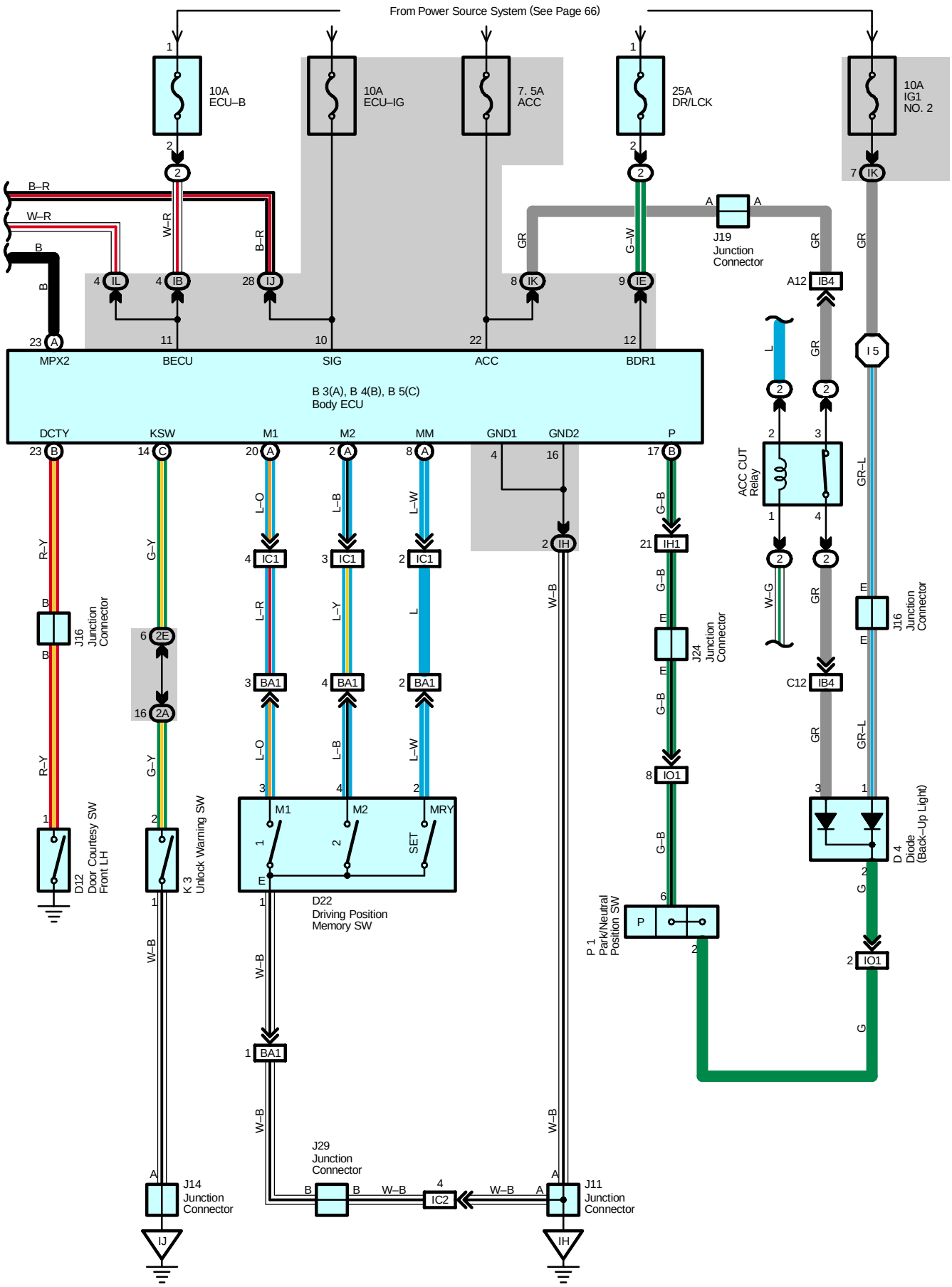
From Power Source System (See Page 66)
10A ECU–B
10A ECU–IG
7. 5A ACC
25A DR/LCK
10A IG1 NO. 2
B–R
W–R
B
W–R
B–R
GR
G–W
GR
GR
J19 Junction Connector
MPX2
BECU
SIG
ACC
BDR1
B 3(A), B 4(B), B 5(C)
Body ECU
DCTY
KSW
M1
M2
MM
GND1
GND2
P
ACC CUT Relay
GR–L
J16 Junction Connector
J24 Junction Connector
D12 Door Courtesy SW Front LH
K 3 Unlock Warning SW
D22 Driving Position Memory SW
D 4 Diode (Back–Up Light)
P 1 Park/Neutral Position SW
J29 Junction Connector
J14 Junction Connector
J11 Junction Connector

System Outline

* In the power seat system, the power seat ECU and SW receives the operation signal from the power seat control switch via infrared communication to operate each power seat motor and adjust the seat position.
* In the event that a malfunction occurs during infrared communication, this system has a fail–safe function to only slide the seat.
* This system has the following function:
  * Manual slide operation
  * Manual reclining control
  * Manual front vertical control
  * Manual rear vertical operation
  * Driving position memory function

Service Hints

P19 (A), P20 (B) Power Seat ECU and SW

(A) 5, (B) 8–Ground : Always approx. 12 volts
(B) 4–Ground : Approx. 12 volts with the ignition SW at ON position
(A) 1–Ground : Always continuity

: Parts Location

Code		See Page	Code		See Page	Code		See Page
B3	A	38	J19		40	P20	B	46
B4	B	38	J24		40	P21		46
B5	C	38	J29		43	P22		46
D4		39	J36	A	46	P23		46
D12		42	J37	B	46	P24		46
D22		42	K3		40	P25		46
J11		40	P1		37	R10		41
J14		40	P16		46	T6		41
J16		40	P19	A	46			

: Relay Blocks

Code	See Page	Relay Blocks (Relay Block Location)
2	22	Engine Room R/B (Engine Compartment Left)

: Junction Block and Wire Harness Connector

Code	See Page	Junction Block and Wire Harness (Connector Location)
IB	26	Engine Room Main Wire and Driver Side J/B (Lower Finish Panel)
IE		
IH	27	Instrument Panel Wire and Driver Side J/B (Lower Finish Panel)
IJ		
IK		
IL		
1A	30	Instrument Panel Wire and J/B No.1 (Instrument Panel Reinforcement Left)
1B		
1E		
2A	32	Instrument Panel Wire and J/B No.2 (Instrument Panel Reinforcement Center)
2E		

Power Seat for Driver's Seat

: Connector Joining Wire Harness and Wire Harness

Code	See Page	Joining Wire Harness and Wire Harness (Connector Location)
IB4	50	Instrument Panel Wire and Engine Room Main Wire (Left Kick Panel)
IC1	50	Front Door LH Wire and Instrument Panel Wire (Left Kick Panel)
IC2		
ID1	50	Instrument Panel Wire and Floor No.2 Wire (Left Kick Panel)
ID2		
IH1	52	Instrument Panel Wire and Instrument Panel Wire (Near the J/B No.1)
IO1	54	Engine Wire and Instrument Panel Wire (Right Side of the Blower Unit)
BA1	58	Front Door LH Wire and Front Door LH Sub Wire (Inside of Front Door LH)

: Ground Points

Code	See Page	Ground Points Location
IH	50	Left Kick Panel
IJ	50	Near the Right Side of Steering Column
BM	58	Under the Driver's Seat

: Splice Points

Code	See Page	Wire Harness with Splice Points	Code	See Page	Wire Harness with Splice Points
I5	52	Instrument Panel Wire			

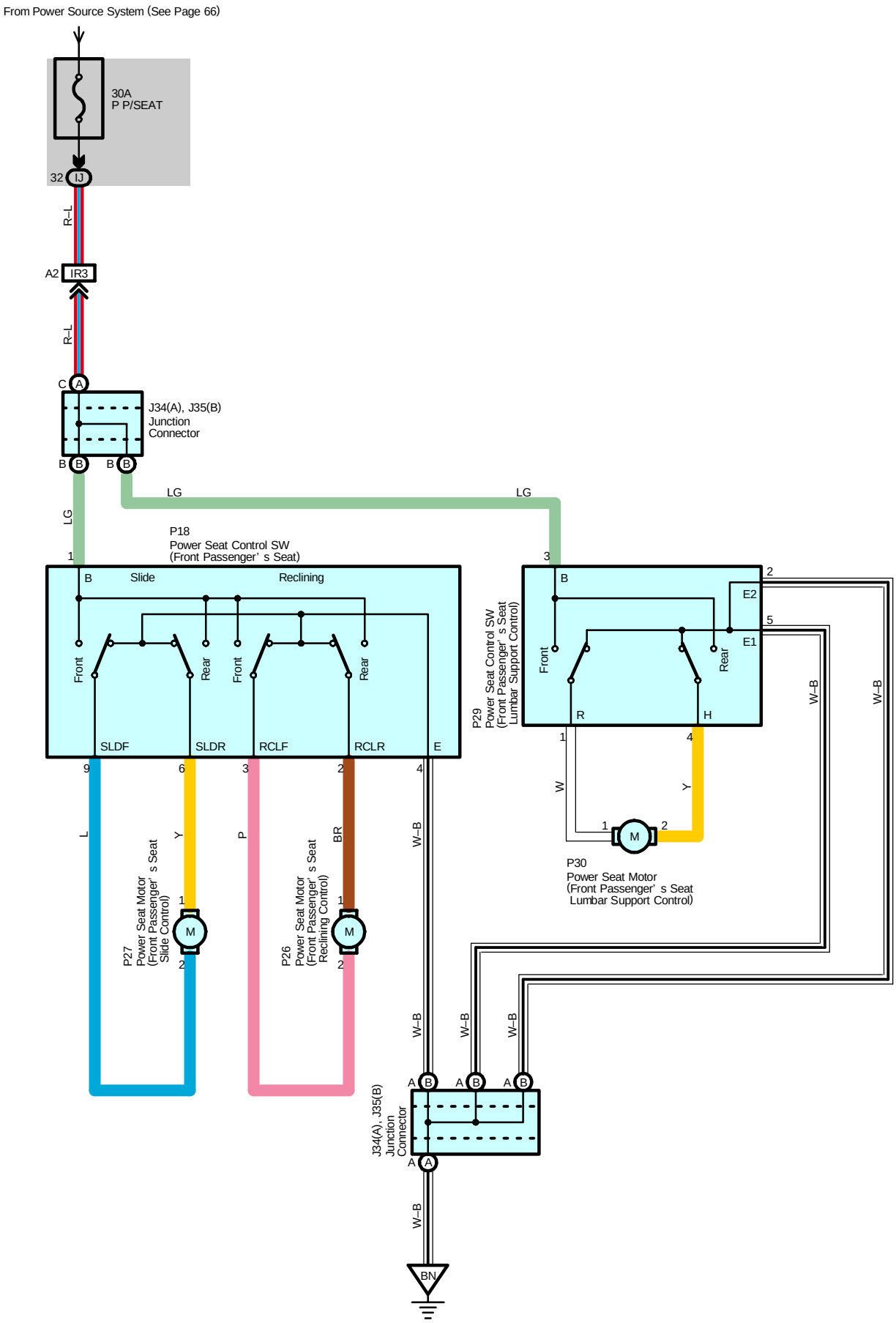
From Power Source System (See Page 66)
30A
P P/SEAT
32
IJ
R–L
A2
IR3
R–L
C
A
J34(A), J35(B)
Junction
Connector
B
B
B
B
LG
LG
LG
P18
Power Seat Control SW
(Front Passenger' s Seat)
1
B
Slide
Reclining
Front
Rear
Front
Rear
SLDF
SLDR
RCLF
RCLR
E
9
6
3
2
4
L
Y
P
BR
W–B
P27
Power Seat Motor
(Front Passenger' s Seat
Slide Control)
P26
Power Seat Motor
(Front Passenger' s Seat
Reclining Control)
M
M
3
B
2
E2
5
E1
Front
Rear
R
H
P29
Power Seat Control SW
(Front Passenger' s Seat
Lumbar Support Control)
1
4
W
Y
W–B
W–B
M
P30
Power Seat Motor
(Front Passenger' s Seat
Lumbar Support Control)
W–B
W–B
W–B
A
B
A
B
A
B
J34(A), J35(B)
Junction
Connector
A
A
W–B
BN

Service Hints

P18 Power Seat Control SW (Front Passenger's Seat)

1–9 : Closed with the front passenger's seat at front slide operation
1–6 : Closed with the front passenger's seat at rear slide operation
1–3 : Closed with the front passenger's seat at front reclining operation
1–2 : Closed with the front passenger's seat at rear reclining operation
4–Ground : Always continuity

: Parts Location

Code		See Page	Code	See Page	Code	See Page
J34	A	46	P26	46	P30	46
J35	B	46	P27	46		
P18		46	P29	46		

: Junction Block and Wire Harness Connector

Code	See Page	Junction Block and Wire Harness (Connector Location)
IJ	27	Instrument Panel Wire and Driver Side J/B (Lower Finish Panel)

: Connector Joining Wire Harness and Wire Harness

Code	See Page	Joining Wire Harness and Wire Harness (Connector Location)
IR3	56	Instrument Panel Wire and Floor Wire (Right Kick Panel)

: Ground Points

Code	See Page	Ground Points Location
BN	58	Under the Front Passenger's Seat

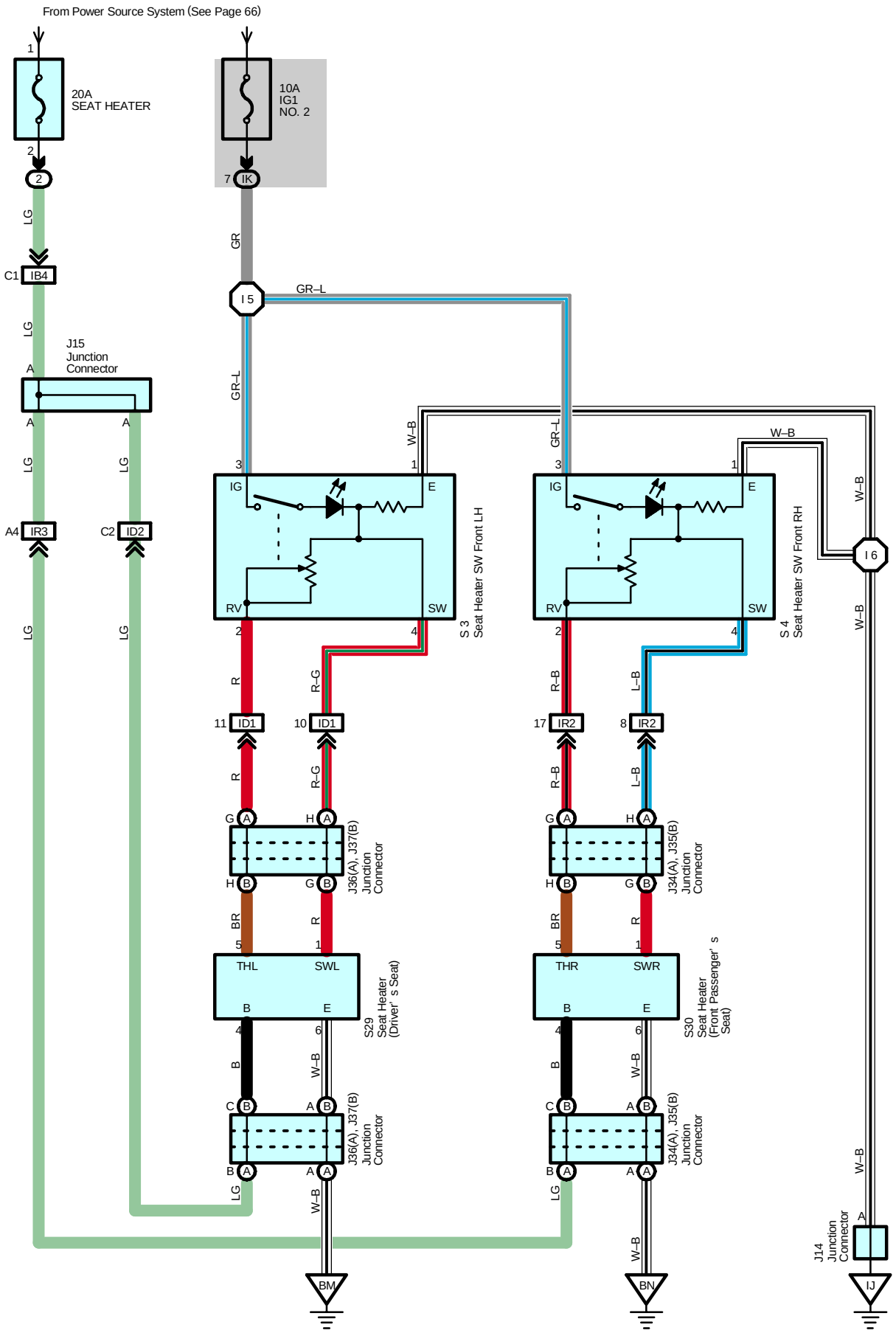
From Power Source System (See Page 66)
20A
SEAT HEATER
10A
IG1
NO. 2
IK
LG
GR
C1
IB4
I 5
GR–L
J15
Junction
Connector
A4
IR3
C2
ID2
W–B
IG
E
RV
SW
S 3
Seat Heater SW Front LH
S 4
Seat Heater SW Front RH
I 6
R
R–G
R–B
L–B
ID1
IR2
J36(A), J37(B)
Junction
Connector
J34(A), J35(B)
Junction
Connector
BR
THL
SWL
THR
SWR
S29
Seat Heater
(Driver' s Seat)
S30
Seat Heater
(Front Passenger' s
Seat)
J14
Junction
Connector
BM
BN
IJ

Service Hints

S3, S4 Seat Heater SW Front LH, RH

3–Ground : Approx. 12 volts with the ignition SW at ON position
1–Ground : Always continuity

: Parts Location

Code		See Page	Code		See Page	Code	See Page
J14		40	J36	A	46	S29	46
J15		40	J37	B	46	S30	46
J34	A	46	S3		41		
J35	B	46	S4		41		

: Relay Blocks

Code	See Page	Relay Blocks (Relay Block Location)
2	22	Engine Room R/B (Engine Compartment Left)

: Junction Block and Wire Harness Connector

Code	See Page	Junction Block and Wire Harness (Connector Location)
IK	27	Instrument Panel Wire and Driver Side J/B (Lower Finish Panel)

: Connector Joining Wire Harness and Wire Harness

Code	See Page	Joining Wire Harness and Wire Harness (Connector Location)
IB4	50	Instrument Panel Wire and Engine Room Main Wire (Left Kick Panel)
ID1	50	Instrument Panel Wire and Floor No.2 Wire (Left Kick Panel)
ID2		
IR2	56	Instrument Panel Wire and Floor Wire (Right Kick Panel)
IR3		

: Ground Points

Code	See Page	Ground Points Location
IJ	50	Near the Right Side of Steering Column
BM	58	Under the Driver's Seat
BN	58	Under the Front Passenger's Seat

: Splice Points

Code	See Page	Wire Harness with Splice Points	Code	See Page	Wire Harness with Splice Points
I5	52	Instrument Panel Wire	I6	52	Instrument Panel Wire

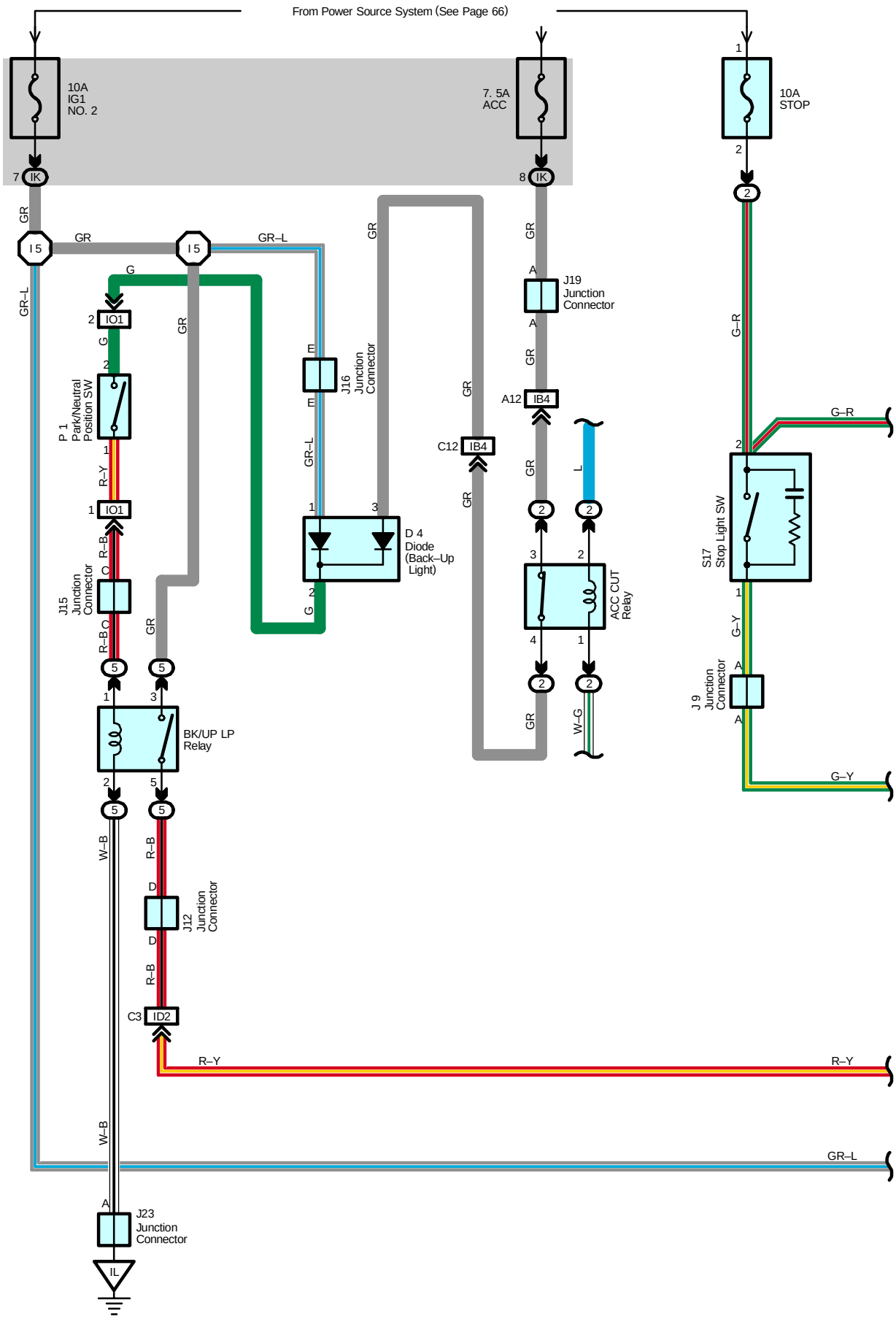
From Power Source System (See Page 66)
10A
IG1
NO. 2
7. 5A
ACC
10A
STOP
7 IK
8 IK
I 5
I 5
GR
GR–L
G
IO1
P 1
Park/Neutral
Position SW
R–Y
R–B
J15
Junction
Connector
J16
Junction
Connector
D 4
Diode
(Back–Up
Light)
J19
Junction
Connector
A12 IB4
C12 IB4
ACC CUT
Relay
W–G
L
G–R
S17
Stop Light SW
G–Y
J 9
Junction
Connector
BK/UP LP
Relay
W–B
J12
Junction
Connector
C3 ID2
J23
Junction
Connector
IL

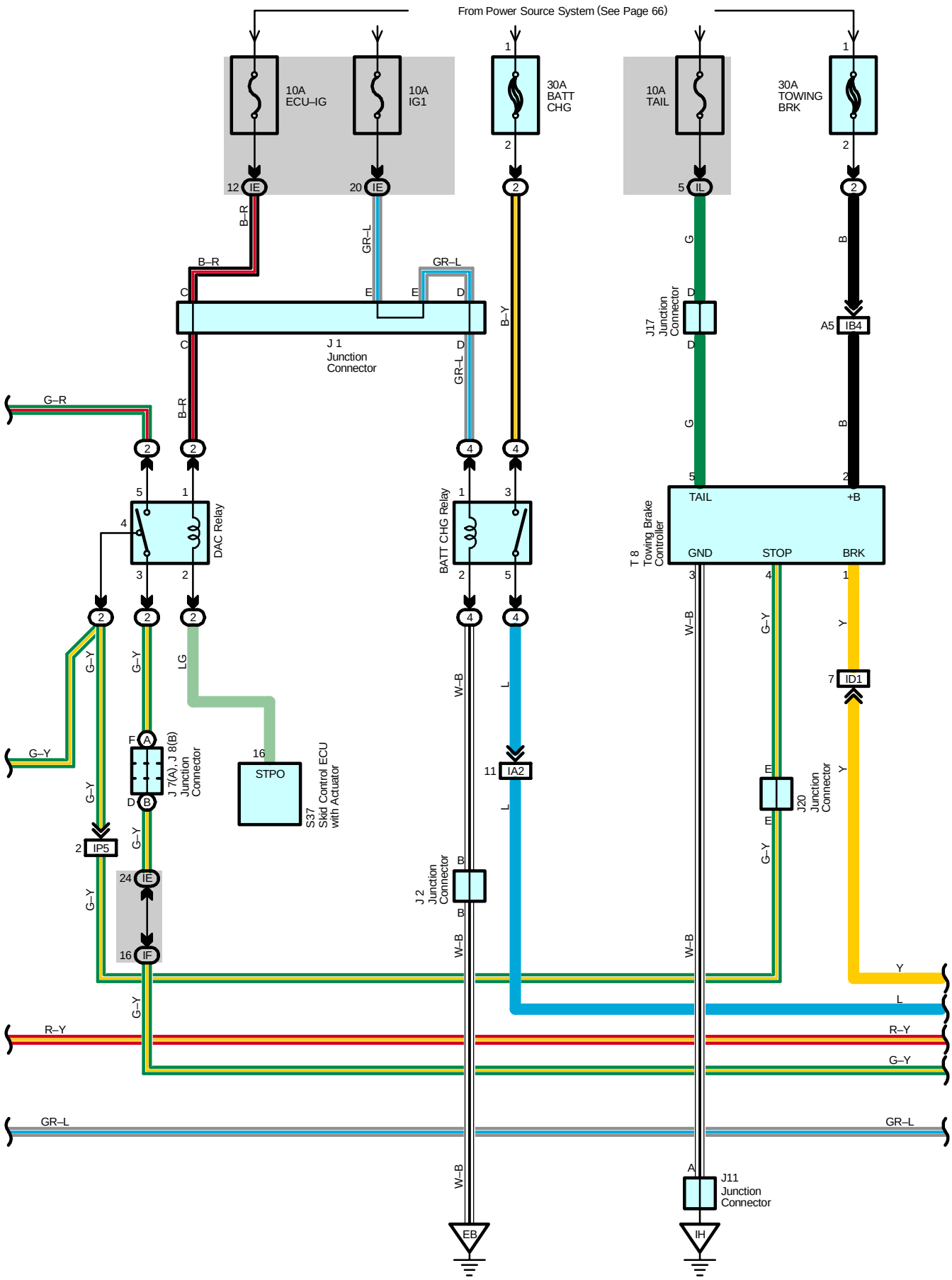
From Power Source System (See Page 66)
10A ECU–IG
10A IG1
30A BATT CHG
10A TAIL
30A TOWING BRK
J 1 Junction Connector
J17 Junction Connector
DAC Relay
BATT CHG Relay
T 8 Towing Brake Controller
TAIL
+B
GND
STOP
BRK
J 7(A), J 8(B) Junction Connector
STPO
S37 Skid Control ECU with Actuator
J 2 Junction Connector
J20 Junction Connector
J11 Junction Connector
IA2
IB4
ID1
IP5
EB
IH

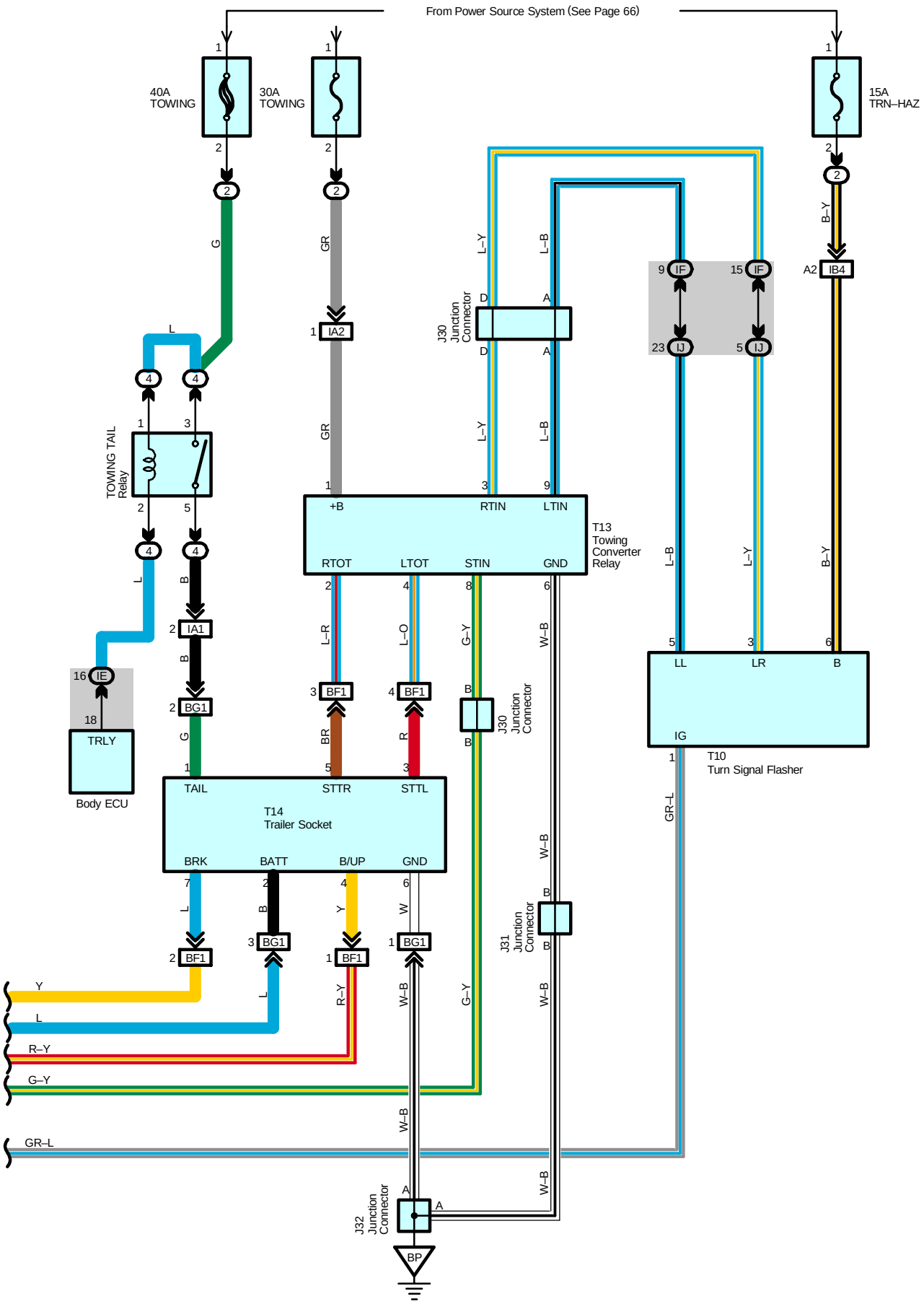
From Power Source System (See Page 66)
40A TOWING
30A TOWING
15A TRN–HAZ
TOWING TAIL Relay
IA2
IA1
BG1
BF1
IE
TRLY
Body ECU
T14 Trailer Socket
TAIL
STTR
STTL
BRK
BATT
B/UP
GND
J30 Junction Connector
T13 Towing Converter Relay
+B
RTIN
LTIN
RTOT
LTOT
STIN
GND
IF
IJ
IB4
T10 Turn Signal Flasher
LL
LR
B
IG
J31 Junction Connector
J32 Junction Connector
BP

Service Hints

T13 Towing Converter Relay

1–Ground : Always approx. 12 volts
6–Ground : Always continuity

T8 Towing Brake Controller

2–Ground : Always approx. 12 volts
3–Ground : Always continuity

T14 Trailer Socket

2–Ground : Approx. 12 volts with the ignition SW at ON position
6–Ground : Always continuity

: Parts Location

Code		See Page	Code	See Page	Code	See Page
D4		39	J15	40	J32	43
J1		37	J16	40	P1	37
J2		37	J17	40	S17	41
J7	A	40	J19	40	S37	37
J8	B	40	J20	40	T8	41
J9		40	J23	40	T10	41
J11		40	J30	43	T13	45
J12		40	J31	43	T14	45

: Relay Blocks

Code	See Page	Relay Blocks (Relay Block Location)
2	22	Engine Room R/B (Engine Compartment Left)
4	23	Engine Room R/B No.4 (Engine Compartment Left)
5	24	Passenger Side R/B (Right Kick Panel)

: Junction Block and Wire Harness Connector

Code	See Page	Junction Block and Wire Harness (Connector Location)
IE	26	Engine Room Main Wire and Driver Side J/B (Lower Finish Panel)
IF	26	Floor No.2 Wire and Driver Side J/B (Lower Finish Panel)
IJ	27	Instrument Panel Wire and Driver Side J/B (Lower Finish Panel)
IK		
IL		

: Connector Joining Wire Harness and Wire Harness

Code	See Page	Joining Wire Harness and Wire Harness (Connector Location)
IA1	50	Floor No.2 Wire and Engine Room Main Wire (Left Kick Panel)
IA2		
IB4	50	Instrument Panel Wire and Engine Room Main Wire (Left Kick Panel)
ID1	50	Instrument Panel Wire and Floor No.2 Wire (Left Kick Panel)
ID2		
IO1	54	Engine Wire and Instrument Panel Wire (Right Side of the Blower Unit)
IP5	54	Instrument Panel Wire and Engine Room Main Wire (Right Kick Panel)
BF1	60	Floor No.2 Wire and Frame No.3 Wire (Left Side of Rear Floor Cross Member)
BG1	60	Frame No.3 Wire and Floor No.2 Wire (Left Side of Rear Floor Cross Member)

: Ground Points

Code	See Page	Ground Points Location
EB	48	Front Left Fender
IH	50	Left Kick Panel
IL	50	Right Kick Panel
BP	58	Left Quarter Panel Inner

: **Splice Points**

Code	See Page	Wire Harness with Splice Points	Code	See Page	Wire Harness with Splice Points
I5	52	Instrument Panel Wire			

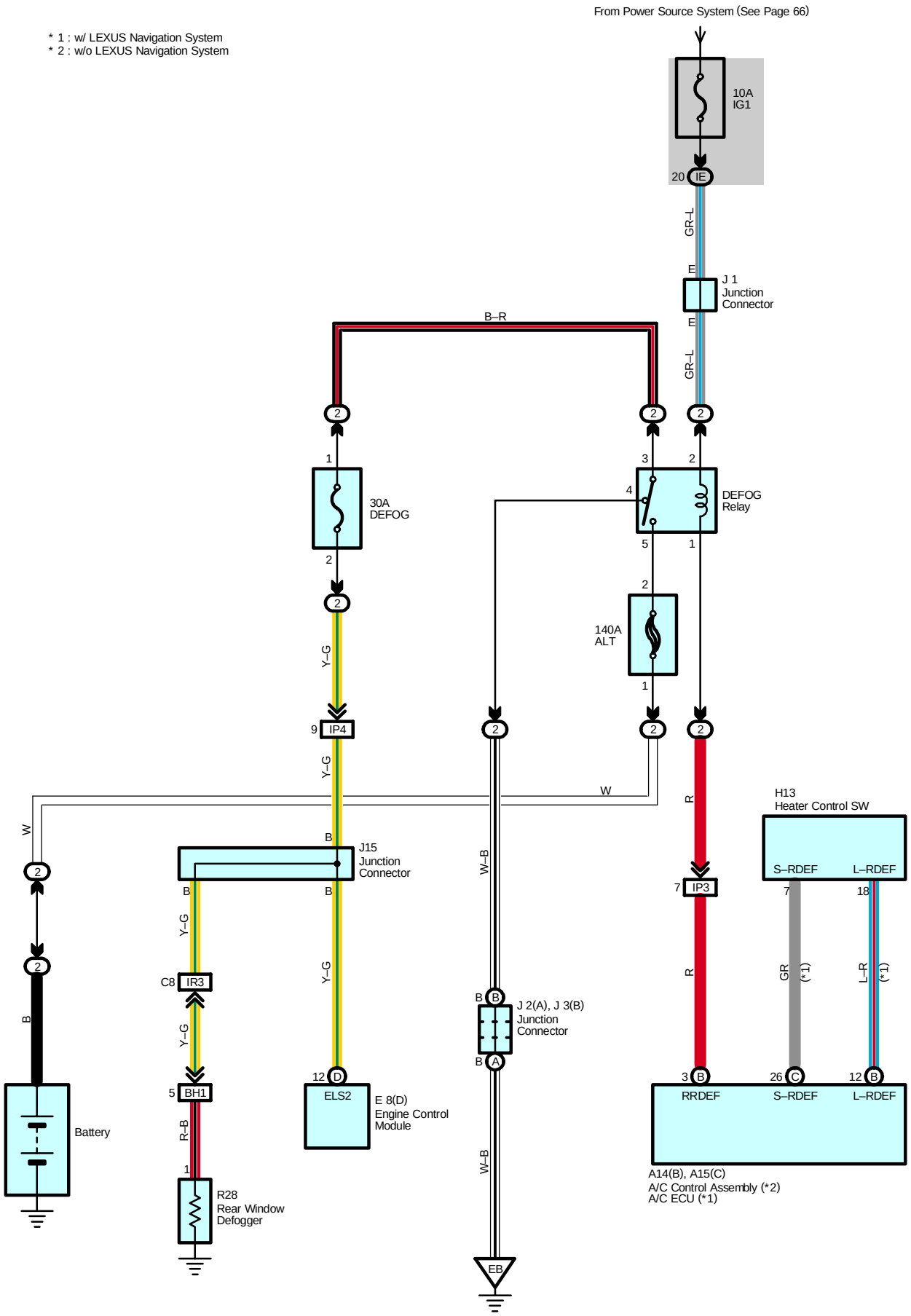
From Power Source System (See Page 66)
* 1 : w/ LEXUS Navigation System
* 2 : w/o LEXUS Navigation System
10A
IG1
20 IE
GR–L
E
J 1
Junction
Connector
E
GR–L
B–R
2
1
30A
DEFOG
2
3
2
4
DEFOG
Relay
5
1
2
140A
ALT
1
Y–G
9 IP4
Y–G
W
R
H13
Heater Control SW
S–RDEF
L–RDEF
7
18
W
B
J15
Junction
Connector
B
B
W–B
7 IP3
Y–G
R
GR
(*1)
L–R
(*1)
B
C8 IR3
Y–G
Y–G
B
J 2(A), J 3(B)
Junction
Connector
B
A
Y–G
5 BH1
12 D
ELS2
E 8(D)
Engine Control
Module
3 B
26 C
12 B
RRDEF
S–RDEF
L–RDEF
Battery
R–B
1
R28
Rear Window
Defogger
W–B
A14(B), A15(C)
A/C Control Assembly (*2)
A/C ECU (*1)
EB

Service Hints

DEFOG Relay

5–3 : Closed with the ignition SW at ON position and rear window defogger SW
(A/C control assembly (w/o LEXUS navigation system), heater control SW (w/ LEXUS navigation system)) on

: Parts Location

Code		See Page	Code		See Page	Code		See Page
A14	B	38	H13		39	J3	B	37
A15	C	38	J1		37	J15		40
E8	D	39	J2	A	37	R28		44

: Relay Blocks

Code	See Page	Relay Blocks (Relay Block Location)
2	22	Engine Room R/B (Engine Compartment Left)

: Junction Block and Wire Harness Connector

Code	See Page	Junction Block and Wire Harness (Connector Location)
IE	26	Engine Room Main Wire and Driver Side J/B (Lower Finish Panel)

: Connector Joining Wire Harness and Wire Harness

Code	See Page	Joining Wire Harness and Wire Harness (Connector Location)
IP3	54	Instrument Panel Wire and Engine Room Main Wire (Right Kick Panel)
IP4		
IR3	56	Instrument Panel Wire and Floor Wire (Right Kick Panel)
BH1	60	Back Door No.1 Wire and Floor Wire (Right Quarter Panel Inner)

: Ground Points

Code	See Page	Ground Points Location
EB	48	Front Left Fender

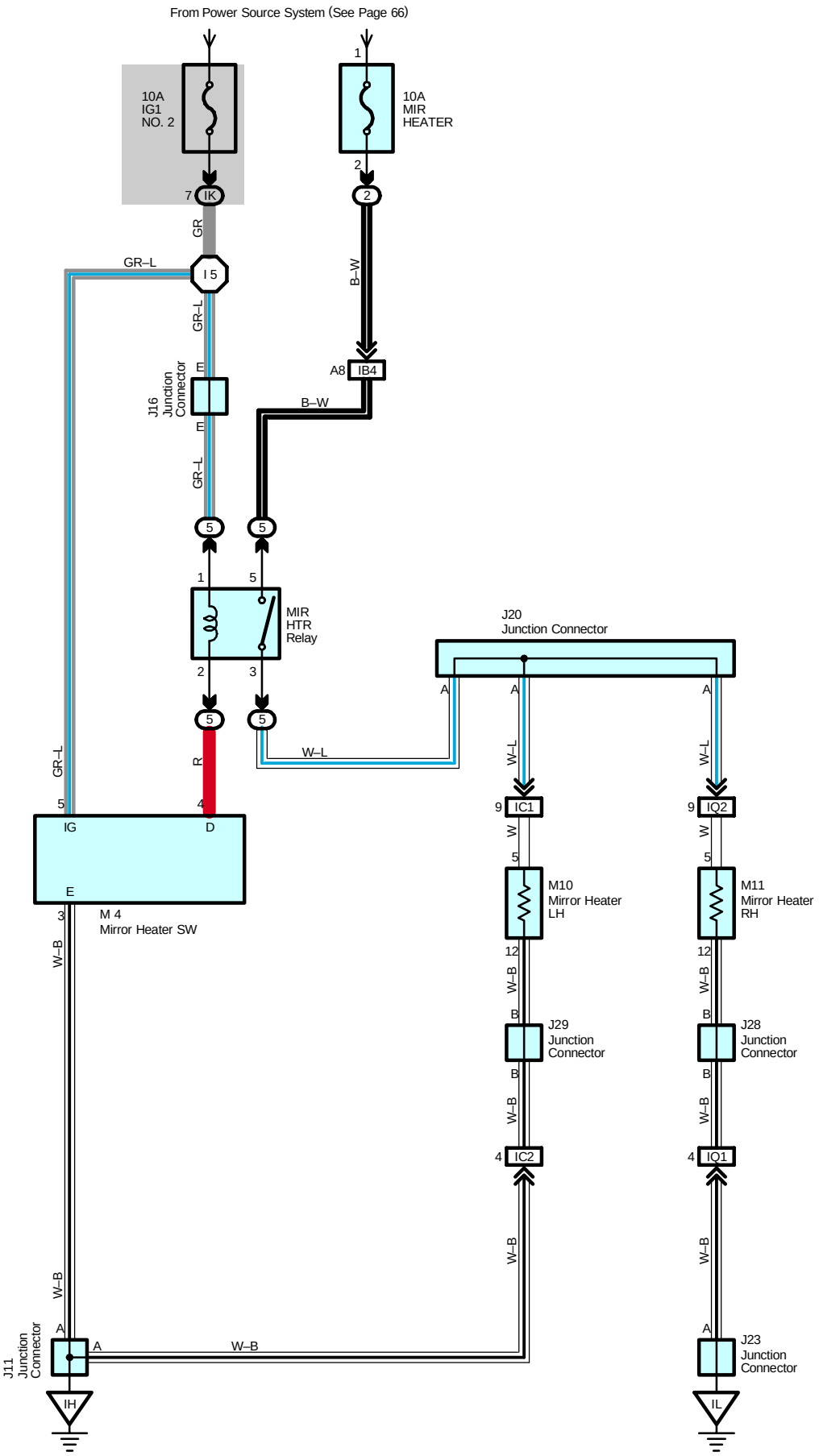
From Power Source System (See Page 66)
10A
IG1
NO. 2
10A
MIR
HEATER
7
IK
1
2
2
GR
GR–L
I 5
B–W
GR–L
E
J16
Junction
Connector
A8
IB4
B–W
E
GR–L
5
5
1
5
MIR
HTR
Relay
2
3
J20
Junction Connector
A
A
A
5
5
W–L
GR–L
R
W–L
W–L
5
4
9
IC1
9
IQ2
IG
D
W
W
E
5
5
M10
Mirror Heater
LH
M11
Mirror Heater
RH
3
M 4
Mirror Heater SW
12
12
W–B
W–B
B
J29
Junction
Connector
B
J28
Junction
Connector
B
B
W–B
W–B
4
IC2
4
IQ1
W–B
W–B
W–B
A
A
J11
Junction
Connector
A
W–B
A
J23
Junction
Connector
IH
IL

Service Hints

M4 Mirror Heater SW

5–Ground : Approx. 12 volts with the ignition SW at ON position
3–Ground : Always continuity

: Parts Location

Code	See Page	Code	See Page	Code	See Page
J11	40	J23	40	M4	40
J16	40	J28	43	M10	44
J20	40	J29	43	M11	44

: Relay Blocks

Code	See Page	Relay Blocks (Relay Block Location)
2	22	Engine Room R/B (Engine Compartment Left)
5	24	Passenger Side R/B (Right Kick Panel)

: Junction Block and Wire Harness Connector

Code	See Page	Junction Block and Wire Harness (Connector Location)
IK	27	Instrument Panel Wire and Driver Side J/B (Lower Finish Panel)

: Connector Joining Wire Harness and Wire Harness

Code	See Page	Joining Wire Harness and Wire Harness (Connector Location)
IB4	50	Instrument Panel Wire and Engine Room Main Wire (Left Kick Panel)
IC1	50	Front Door LH Wire and Instrument Panel Wire (Left Kick Panel)
IC2		
IQ1	56	Front Door RH Wire and Instrument Panel Wire (Right Kick Panel)
IQ2		

: Ground Points

Code	See Page	Ground Points Location
IH	50	Left Kick Panel
IL	50	Right Kick Panel

: Splice Points

Code	See Page	Wire Harness with Splice Points	Code	See Page	Wire Harness with Splice Points
I5	52	Instrument Panel Wire			

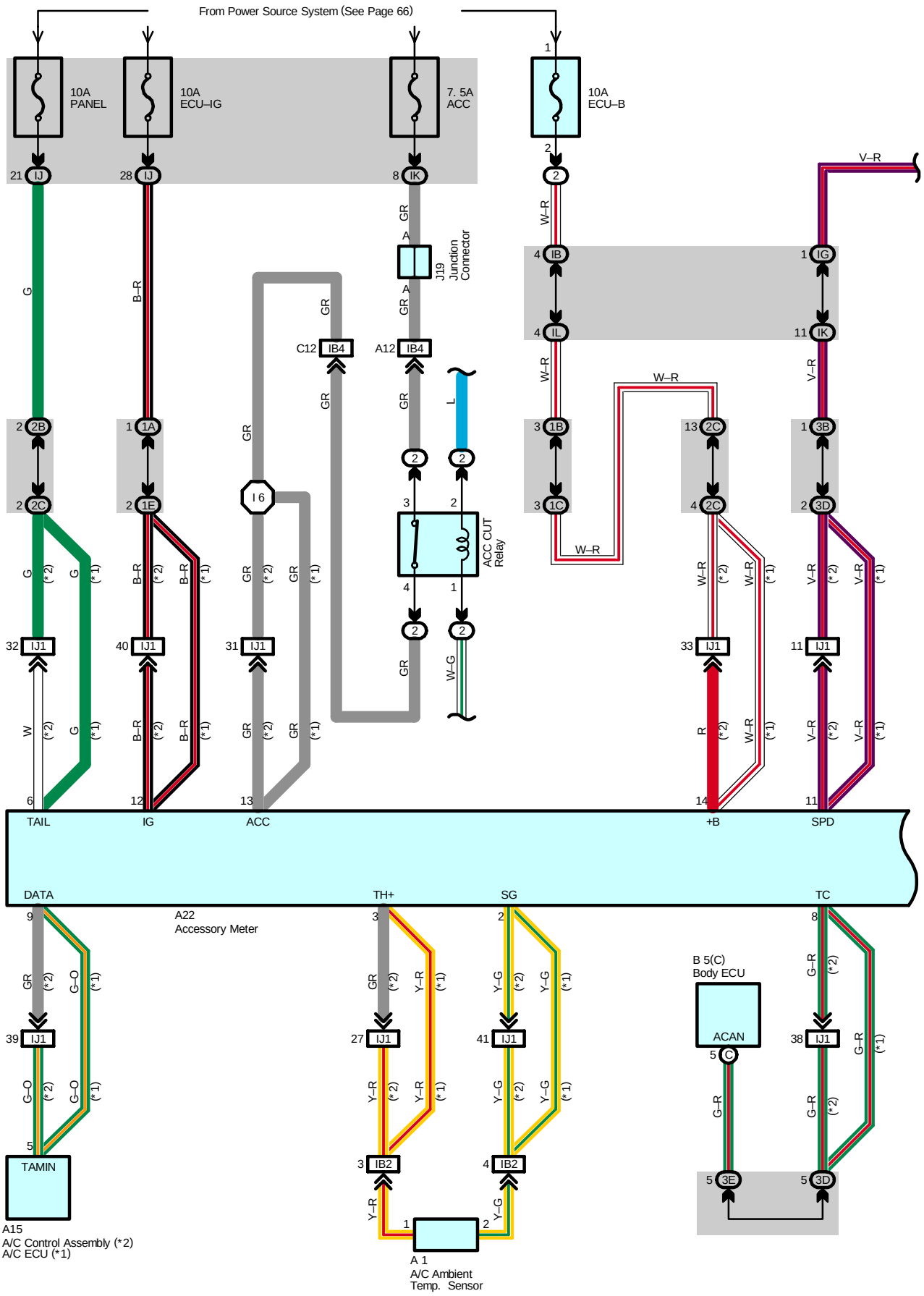
From Power Source System (See Page 66)
10A PANEL
10A ECU–IG
7. 5A ACC
10A ECU–B
J19 Junction Connector
ACC CUT Relay
TAIL
IG
ACC
+B
SPD
DATA
TH+
SG
TC
A22 Accessory Meter
B 5(C) Body ECU
ACAN
TAMIN
A15 A/C Control Assembly (*2) A/C ECU (*1)
A 1 A/C Ambient Temp. Sensor

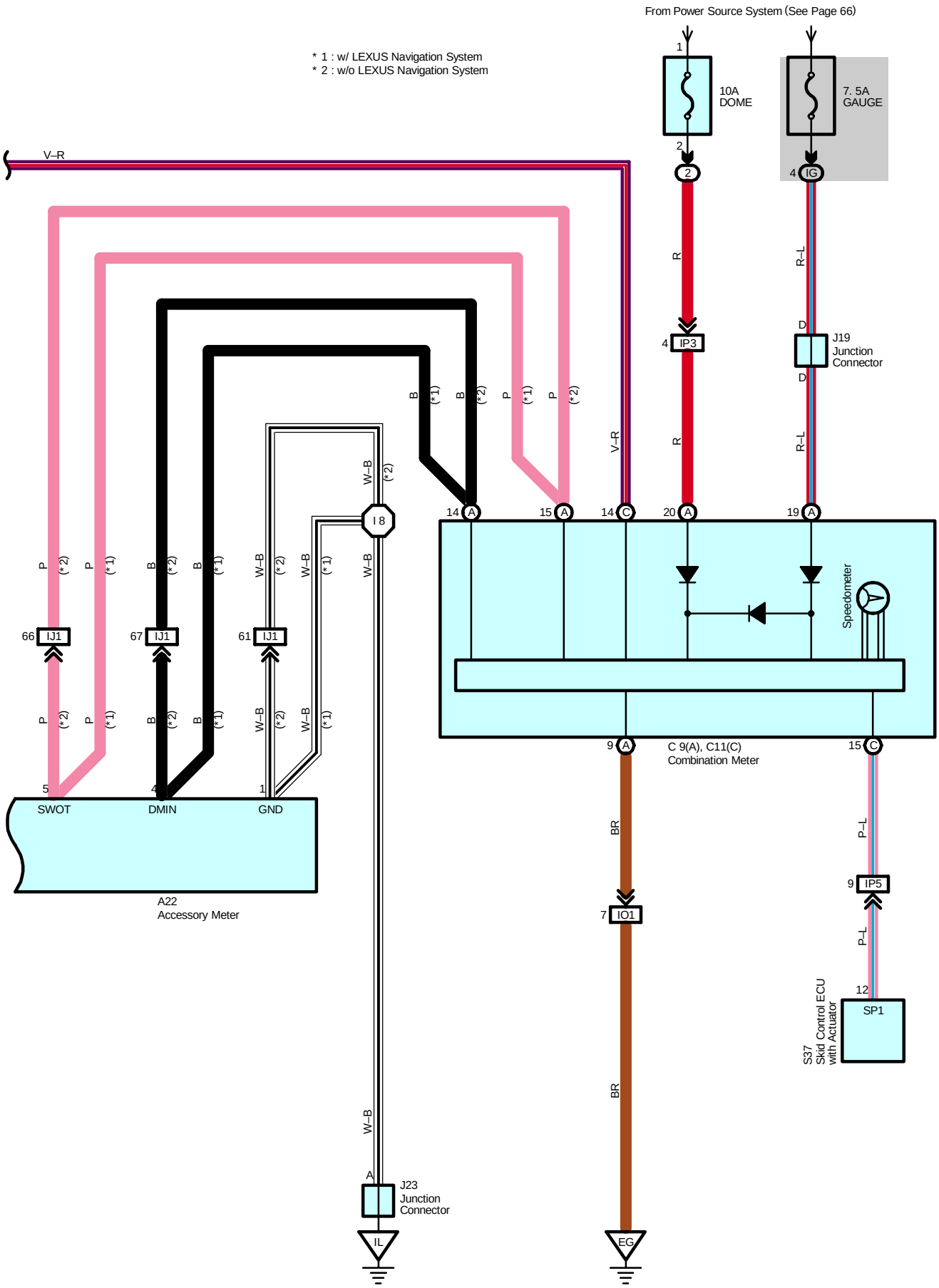
From Power Source System (See Page 66)
* 1 : w/ LEXUS Navigation System
* 2 : w/o LEXUS Navigation System
10A
DOME
7. 5A
GAUGE
V–R
R
R–L
IP3
J19
Junction
Connector
B
P
W–B
I 8
IJ1
SWOT
DMIN
GND
A22
Accessory Meter
Speedometer
C 9(A), C11(C)
Combination Meter
BR
IO1
P–L
IP5
SP1
S37
Skid Control ECU
with Actuator
J23
Junction
Connector
IL
EG

Accessory Meter

Service Hints

A22 Accessory Meter

14–Ground : Always approx. 12 volts
12–Ground : Approx. 12 volts with the ignition SW at ON position
1–Ground : Always continuity

: Parts Location

Code	See Page	Code		See Page	Code	See Page
A1	36	B5	C	38	J19	40
A15	38	C9	A	38	J23	40
A22	38	C11	C	38	S37	37

: Relay Blocks

Code	See Page	Relay Blocks (Relay Block Location)
2	22	Engine Room R/B (Engine Compartment Left)

: Junction Block and Wire Harness Connector

Code	See Page	Junction Block and Wire Harness (Connector Location)
IB	26	Engine Room Main Wire and Driver Side J/B (Lower Finish Panel)
IG	27	Instrument Panel Wire and Driver Side J/B (Lower Finish Panel)
IJ		
IK		
IL		
1A	30	Instrument Panel Wire and J/B No.1 (Instrument Panel Reinforcement Left)
1B		
1C		
1E		
2B	32	Instrument Panel Wire and J/B No.2 (Instrument Panel Reinforcement Center)
2C		
3B	34	Instrument Panel Wire and J/B No.3 (Instrument Panel Reinforcement Right)
3D		
3E		

: Connector Joining Wire Harness and Wire Harness

Code	See Page	Joining Wire Harness and Wire Harness (Connector Location)
IB2	50	Instrument Panel Wire and Engine Room Main Wire (Left Kick Panel)
IB4		
IJ1	52	Instrument Panel Wire and Instrument Panel No.2 Wire (Instrument Panel Brace LH)
IO1	54	Engine Wire and Instrument Panel Wire (Right Side of the Blower Unit)
IP3	54	Instrument Panel Wire and Engine Room Main Wire (Right Kick Panel)
IP5		

: Ground Points

Code	See Page	Ground Points Location
EG	48	Rear Bank of Left Cylinder Head
IL	50	Right Kick Panel

: Splice Points

Code	See Page	Wire Harness with Splice Points	Code	See Page	Wire Harness with Splice Points
I6	52	Instrument Panel Wire	I8	52	Instrument Panel Wire

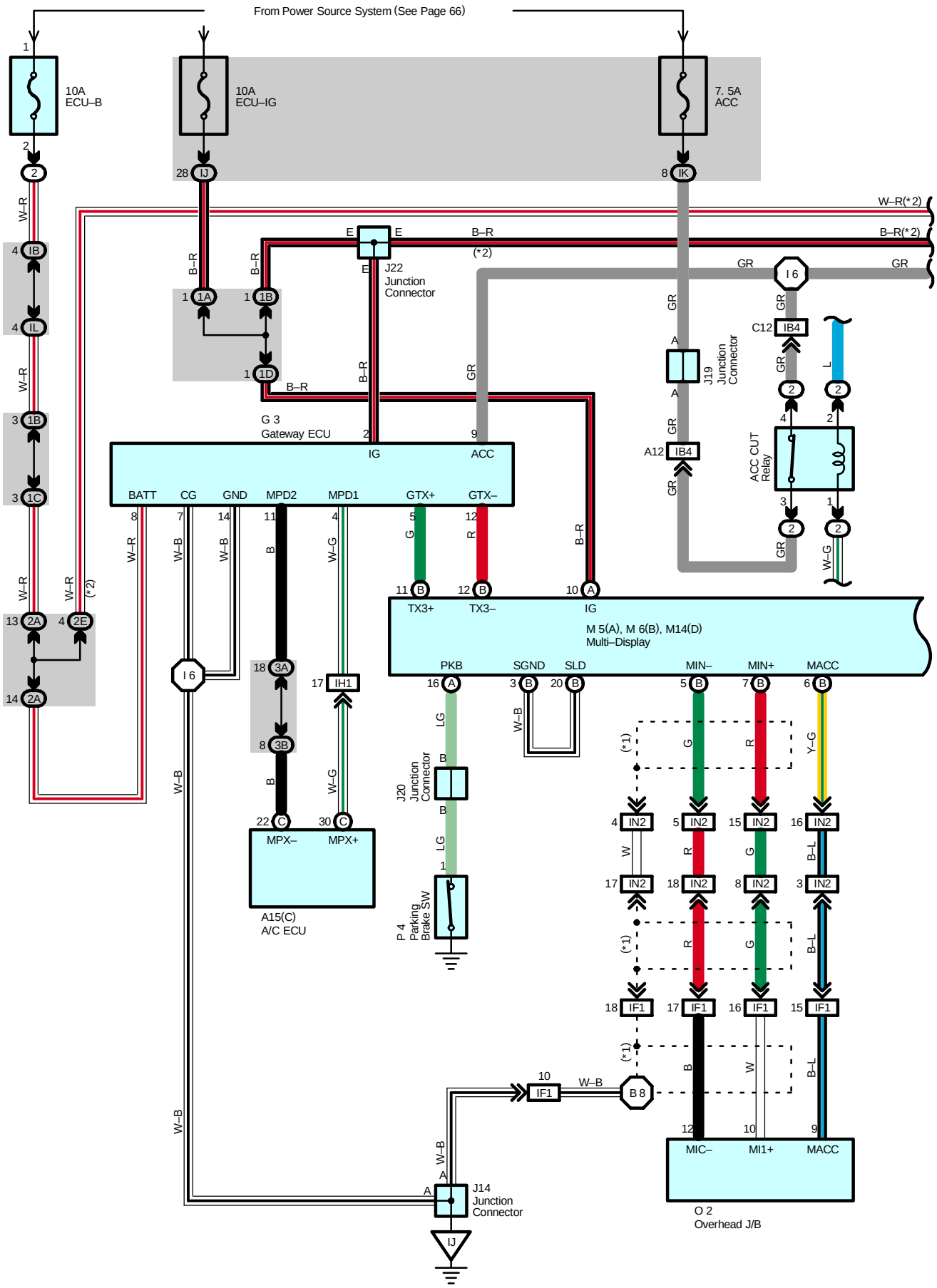
From Power Source System (See Page 66)
10A
ECU–B
10A
ECU–IG
7. 5A
ACC
W–R(*2)
B–R(*2)
J22
Junction
Connector
G 3
Gateway ECU
BATT
CG
GND
MPD2
MPD1
GTX+
GTX–
IG
ACC
J19
Junction
Connector
ACC CUT
Relay
M 5(A), M 6(B), M14(D)
Multi–Display
TX3+
TX3–
PKB
SGND
SLD
MIN–
MIN+
MACC
J20
Junction
Connector
P 4
Parking
Brake SW
A15(C)
A/C ECU
MPX–
MPX+
J14
Junction
Connector
O 2
Overhead J/B
MIC–
MI1+

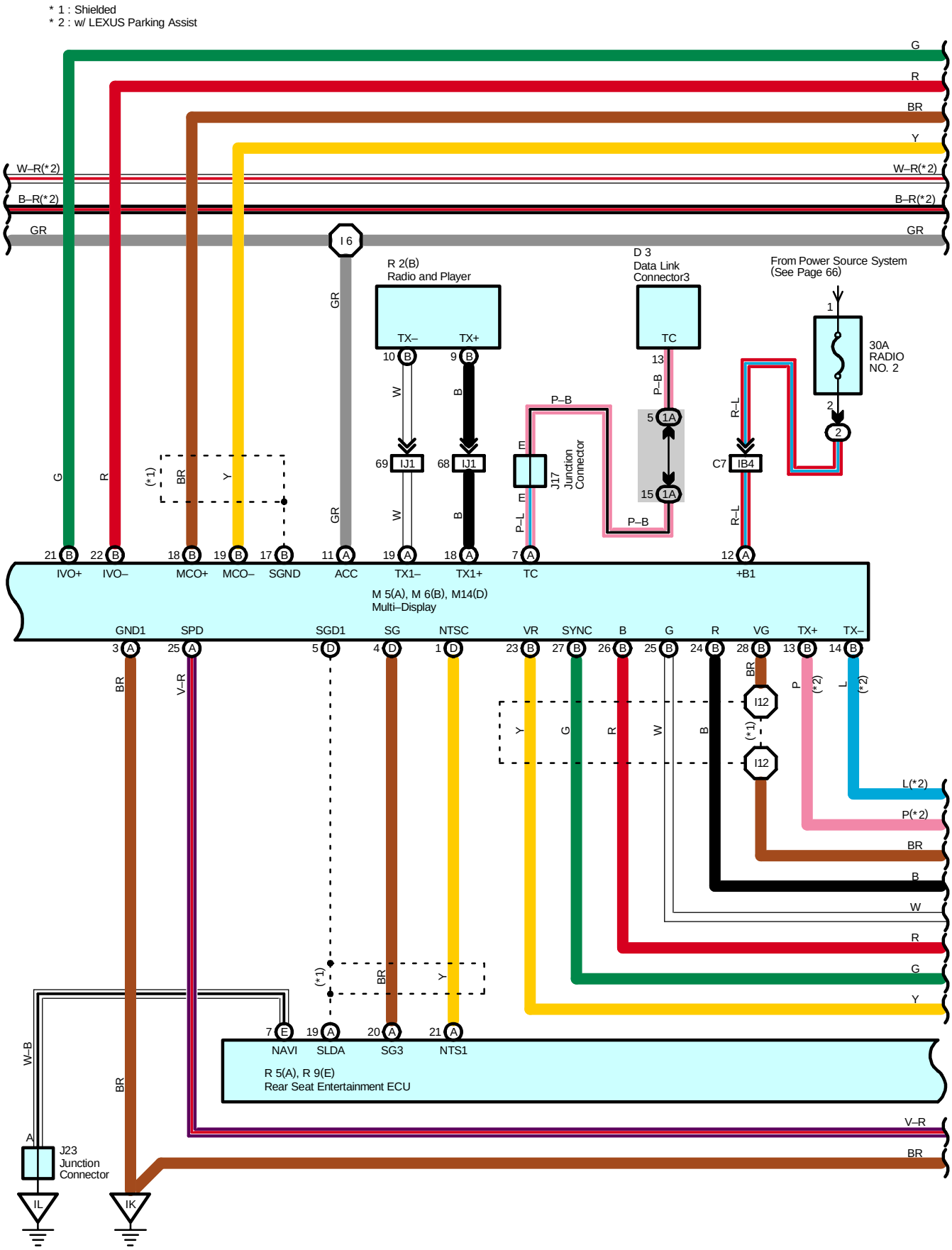
* 1 : Shielded
* 2 : w/ LEXUS Parking Assist
G
R
BR
Y
W–R(*2)
B–R(*2)
GR
I 6
R 2(B)
Radio and Player
TX–
TX+
10 B
9 B
W
B
69 IJ1
68 IJ1
D 3
Data Link
Connector3
TC
13
P–B
5 1A
15 1A
From Power Source System
(See Page 66)
1
30A
RADIO
NO. 2
2
R–L
C7 IB4
E
J17
Junction
Connector
P–L
(*1)
21 B
22 B
18 B
19 B
17 B
11 A
19 A
18 A
7 A
12 A
IVO+
IVO–
MCO+
MCO–
SGND
ACC
TX1–
TX1+
TC
+B1
M 5(A), M 6(B), M14(D)
Multi–Display
GND1
SPD
SGD1
SG
NTSC
VR
SYNC
B
G
R
VG
TX+
TX–
3 A
25 A
5 D
4 D
1 D
23 B
27 B
26 B
25 B
24 B
28 B
13 B
14 B
V–R
I12
L(*2)
P(*2)
7 E
19 A
20 A
21 A
NAVI
SLDA
SG3
NTS1
R 5(A), R 9(E)
Rear Seat Entertainment ECU
W–B
J23
Junction
Connector
IL
IK

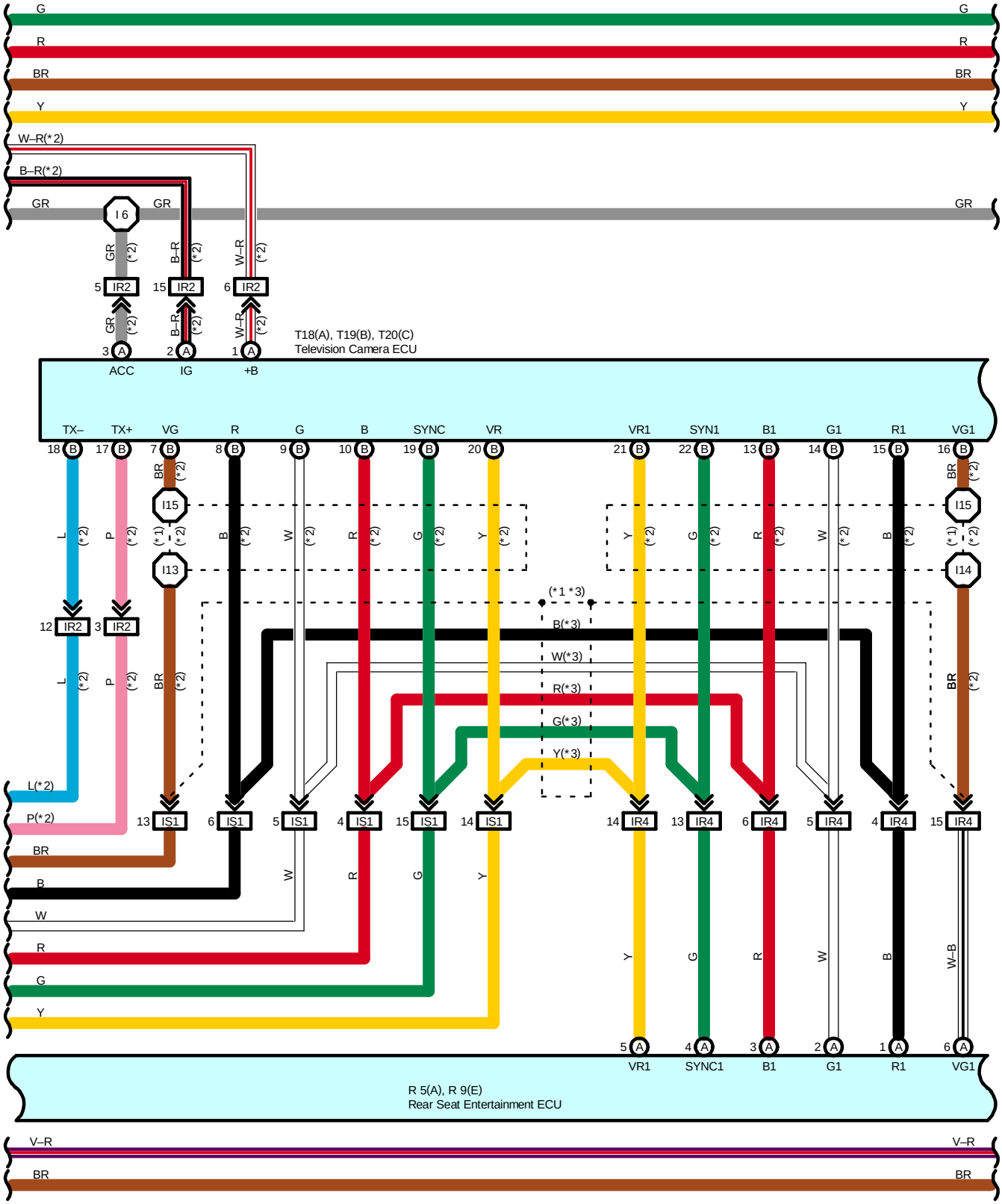
G
R
BR
Y
W–R(*2)
B–R(*2)
GR
I 6
IR2
T18(A), T19(B), T20(C)
Television Camera ECU
ACC
IG
+B
TX–
TX+
VG
R
G
B
SYNC
VR
VR1
SYN1
B1
G1
R1
VG1
I15
I13
I14
(*1 *3)
B(*3)
W(*3)
R(*3)
G(*3)
Y(*3)
L(*2)
P(*2)
IS1
IR4
W–B
R 5(A), R 9(E)
Rear Seat Entertainment ECU
V–R

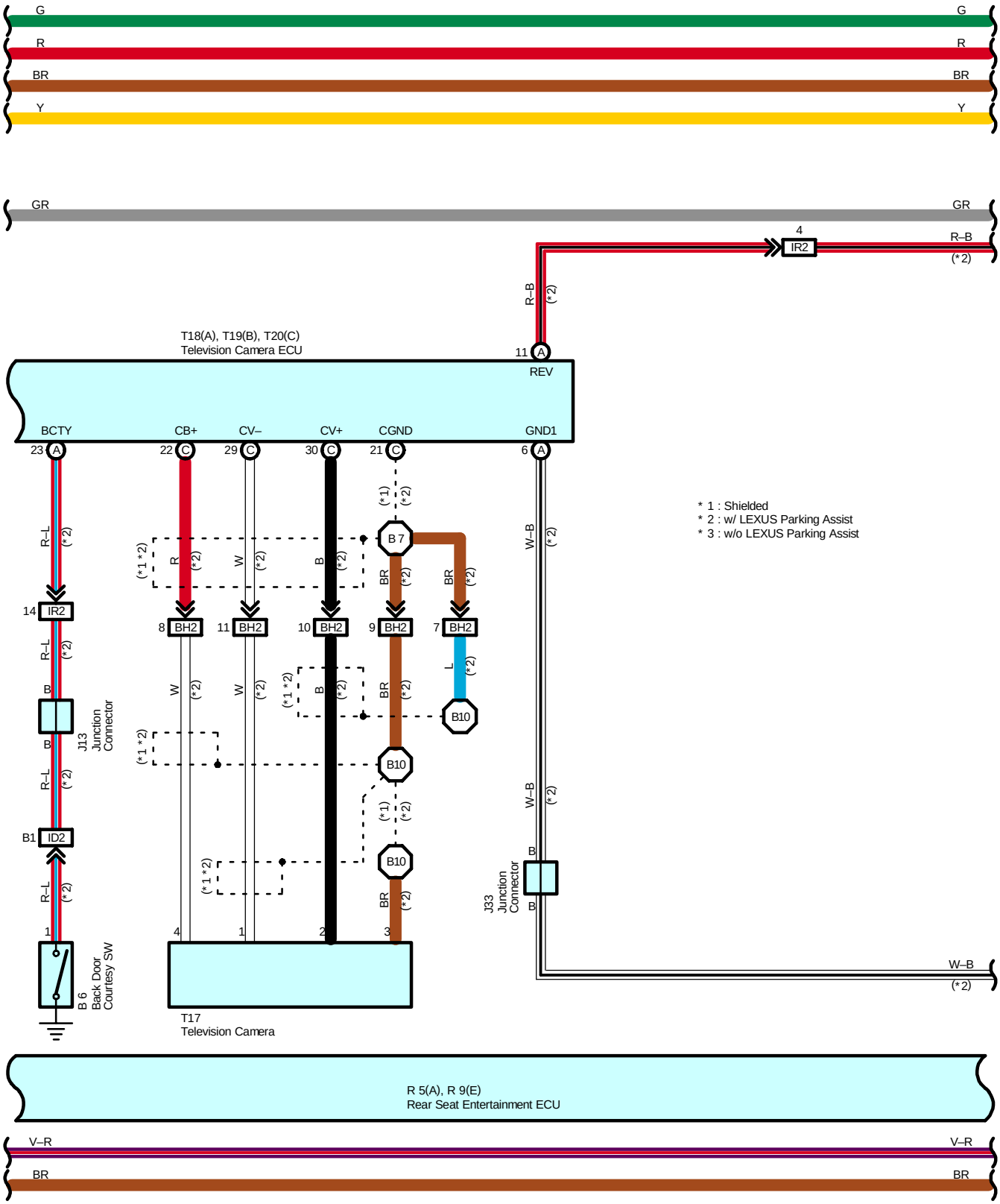
G
R
BR
Y
GR
4
IR2
R–B
(*2)
T18(A), T19(B), T20(C)
Television Camera ECU
11
REV
BCTY
CB+
CV–
CV+
CGND
GND1
23
22
29
30
21
6
R–L
14
IR2
B
J13
Junction
Connector
B1
ID2
1
B 6
Back Door
Courtesy SW
8
BH2
11
BH2
10
BH2
9
BH2
7
BH2
B 7
B10
W
(*1 *2)
(*1)
4
1
2
3
T17
Television Camera
W–B
J33
Junction
Connector
* 1 : Shielded
* 2 : w/ LEXUS Parking Assist
* 3 : w/o LEXUS Parking Assist
R 5(A), R 9(E)
Rear Seat Entertainment ECU
V–R

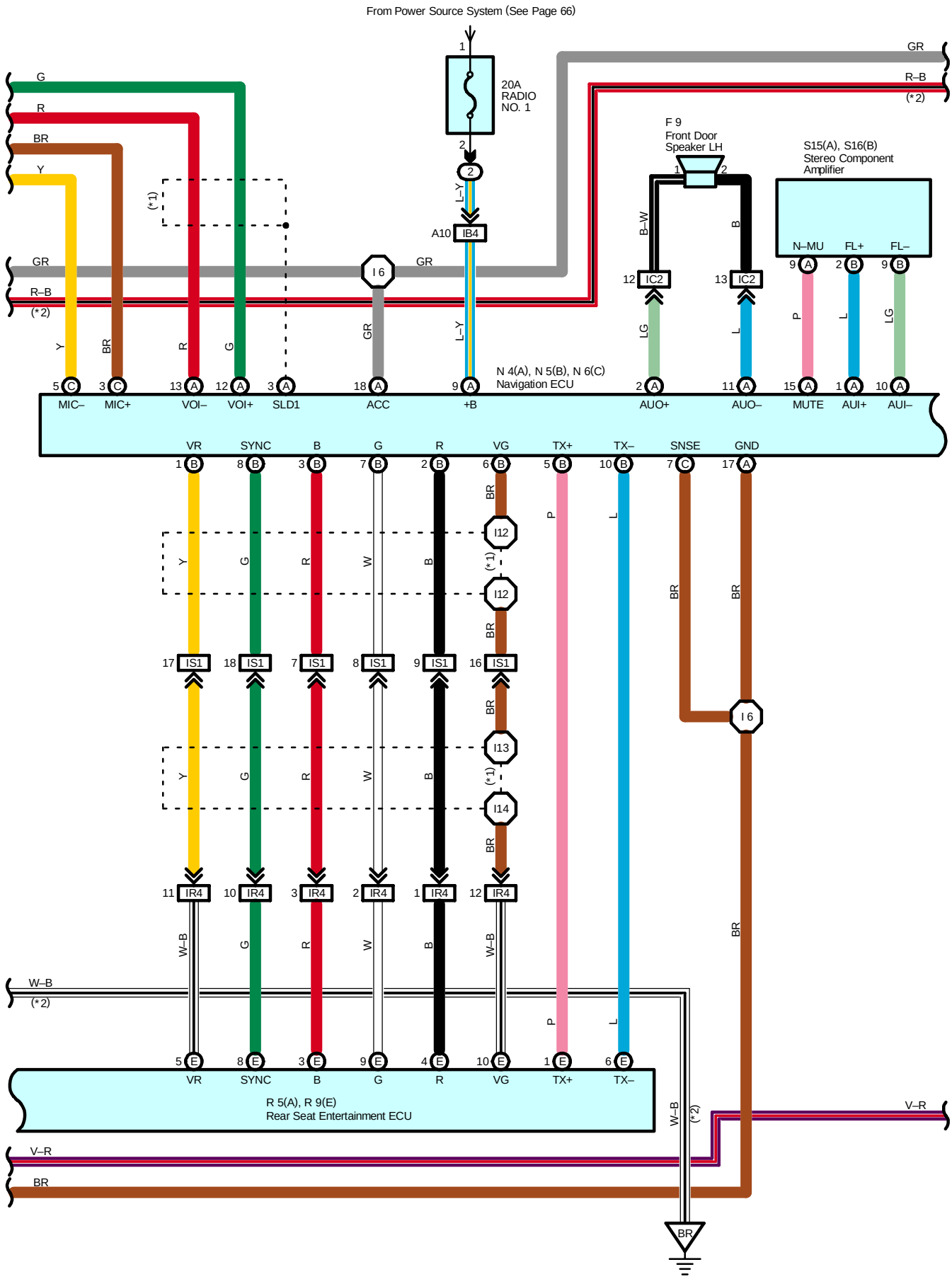
From Power Source System (See Page 66)
20A
RADIO
NO. 1
F 9
Front Door
Speaker LH
S15(A), S16(B)
Stereo Component
Amplifier
N–MU
FL+
FL–
N 4(A), N 5(B), N 6(C)
Navigation ECU
MIC–
MIC+
VOI–
VOI+
SLD1
ACC
+B
AUO+
AUO–
MUTE
AUI+
AUI–
VR
SYNC
B
G
R
VG
TX+
TX–
SNSE
GND
R 5(A), R 9(E)
Rear Seat Entertainment ECU
(*1)
(*2)

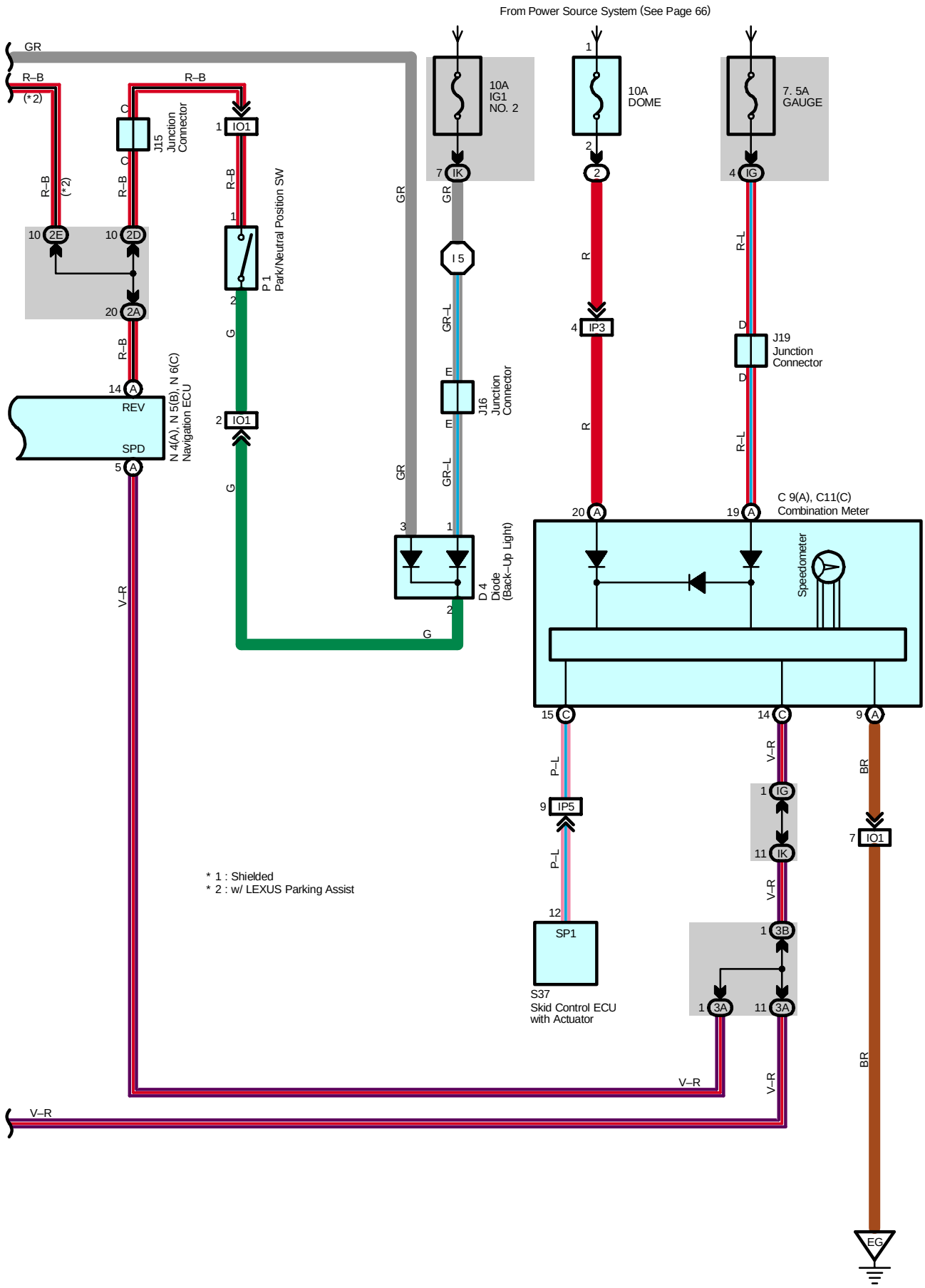
From Power Source System (See Page 66)
GR
R–B
(*2)
R–B
J15
Junction
Connector
C
C
1 IO1
R–B
(*2)
R–B
R–B
10 2E
10 2D
20 2A
R–B
14 A
REV
SPD
5 A
N 4(A), N 5(B), N 6(C)
Navigation ECU
V–R
P 1
Park/Neutral Position SW
1
2
G
2 IO1
G
GR
GR
10A
IG1
NO. 2
7 IK
GR
I 5
GR–L
E
J16
Junction
Connector
E
GR–L
3
1
D 4
Diode
(Back–Up Light)
2
G
1
10A
DOME
2
2
R
4 IP3
R
20 A
7. 5A
GAUGE
4 IG
R–L
D
J19
Junction
Connector
D
R–L
19 A
C 9(A), C11(C)
Combination Meter
Speedometer
15 C
14 C
9 A
P–L
9 IP5
P–L
12
SP1
S37
Skid Control ECU
with Actuator
V–R
1 IG
11 IK
V–R
1 3B
1 3A
11 3A
V–R
V–R
BR
7 IO1
BR
EG
V–R
* 1 : Shielded
* 2 : w/ LEXUS Parking Assist

Navigation and Parking Assist with RSES

System Outline

The LEXUS navigation system displays the operating status and instructions for the radio and player. Additionally, the navigation system precisely measures the current vehicle position, displays the map obtained from the map database on the screen, and informs the route to the destination shown on the map using voice guidance.

Service Hints

N4 (A), N6 (C) Navigation ECU

(A)18–Ground : Approx. 12 volts with the ignition SW at ON or ACC position
(A) 9–Ground : Always approx. 12 volts
(A)17, (C) 7–Ground: Always continuity

T18 (A) Television Camera ECU

(A) 1–Ground : Always approx. 12 volts
(A) 3–Ground : Approx. 12 volts with the ignition SW at ON or ACC position
(A) 6–Ground : Always continuity
(A) 2–Ground : Approx. 12 volts with the ignition SW at ON position

: Parts Location

Code		See Page	Code		See Page	Code		See Page
A15	C	38	J19		40	P4		40
B6		42	J20		40	R2	B	41
C9	A	38	J22		40	R5	A	41
C11	C	38	J23		40	R9	E	41
D3		39	J33		43	S15	A	41
D4		39	M5	A	40	S16	B	41
F9		43	M6	B	40	S37		37
G3		39	M14	D	40	T17		45
J13		40	N4	A	40	T18	A	41
J14		40	N5	B	40	T19	B	41
J15		40	N6	C	40	T20	C	41
J16		40	O2		44			
J17		40	P1		37			

: Relay Blocks

Code	See Page	Relay Blocks (Relay Block Location)
2	22	Engine Room R/B (Engine Compartment Left)

: Junction Block and Wire Harness Connector

Code	See Page	Junction Block and Wire Harness (Connector Location)
IB	26	Engine Room Main Wire and Driver Side J/B (Lower Finish Panel)
IG	27	Instrument Panel Wire and Driver Side J/B (Lower Finish Panel)
IJ		
IK		
IL		
1A	30	Instrument Panel Wire and J/B No.1 (Instrument Panel Reinforcement Left)
1B		
1C		
1D		
2A	32	Instrument Panel Wire and J/B No.2 (Instrument Panel Reinforcement Center)
2D		
2E		
3A	34	Instrument Panel Wire and J/B No.3 (Instrument Panel Reinforcement Right)
3B		

: **Connector Joining Wire Harness and Wire Harness**

Code	See Page	Joining Wire Harness and Wire Harness (Connector Location)
IB4	50	Instrument Panel Wire and Engine Room Main Wire (Left Kick Panel)
IC2	50	Front Door LH Wire and Instrument Panel Wire (Left Kick Panel)
ID2	50	Instrument Panel Wire and Floor No.2 Wire (Left Kick Panel)
IF1	52	Roof Wire and Instrument Panel Wire (Upper the Driver Side J/B)
IH1	52	Instrument Panel Wire and Instrument Panel Wire (Near the J/B No.1)
IJ1	52	Instrument Panel Wire and Instrument Panel No.2 Wire (Instrument Panel Brace LH)
IN2	54	Instrument Panel Wire and Instrument Panel Wire (Under the Instrument Panel Brace RH)
IO1	54	Engine Wire and Instrument Panel Wire (Right Side of the Blower Unit)
IP3	54	Instrument Panel Wire and Engine Room Main Wire (Right Kick Panel)
IP5		
IR2	56	Instrument Panel Wire and Floor Wire (Right Kick Panel)
IR4		
IS1	56	Instrument Panel Wire and Floor Wire (Under the Front Passenger's Seat)
BH2	60	Back Door No.1 Wire and Floor Wire (Right Quarter Panel Inner)

: **Ground Points**

Code	See Page	Ground Points Location
EG	48	Rear Bank of Left Cylinder Head
IJ	50	Near the Right Side of Steering Column
IK	50	Instrument Panel Brace LH
IL	50	Right Kick Panel
BR	58	Right Quarter Panel Inner

: **Splice Points**

Code	See Page	Wire Harness with Splice Points	Code	See Page	Wire Harness with Splice Points
I5	52	Instrument Panel Wire	I15	52	Floor Wire
I6			B7	60	
I12			B8	60	Roof Wire
I13	52	Floor Wire	B10	60	Back Door No.1 Wire
I14					

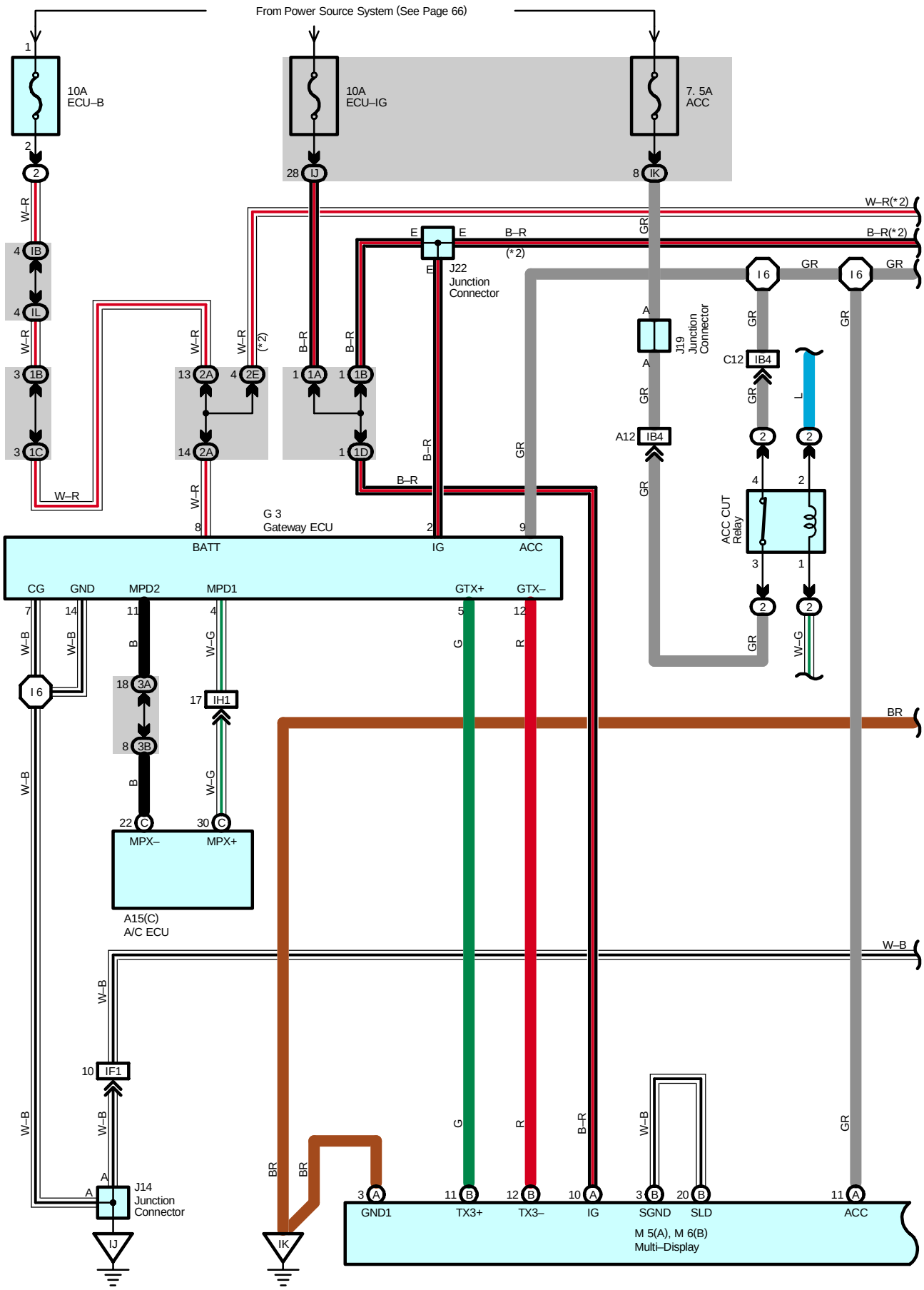
From Power Source System (See Page 66)
10A
ECU–B
10A
ECU–IG
7. 5A
ACC
W–R(*2)
B–R(*2)
J22
Junction
Connector
J19
Junction
Connector
C12
IB4
A12
IB4
ACC CUT
Relay
G 3
Gateway ECU
BATT
IG
ACC
CG
GND
MPD2
MPD1
GTX+
GTX–
IH1
MPX–
MPX+
A15(C)
A/C ECU
IF1
J14
Junction
Connector
GND1
TX3+
TX3–
IG
SGND
SLD
ACC
M 5(A), M 6(B)
Multi–Display

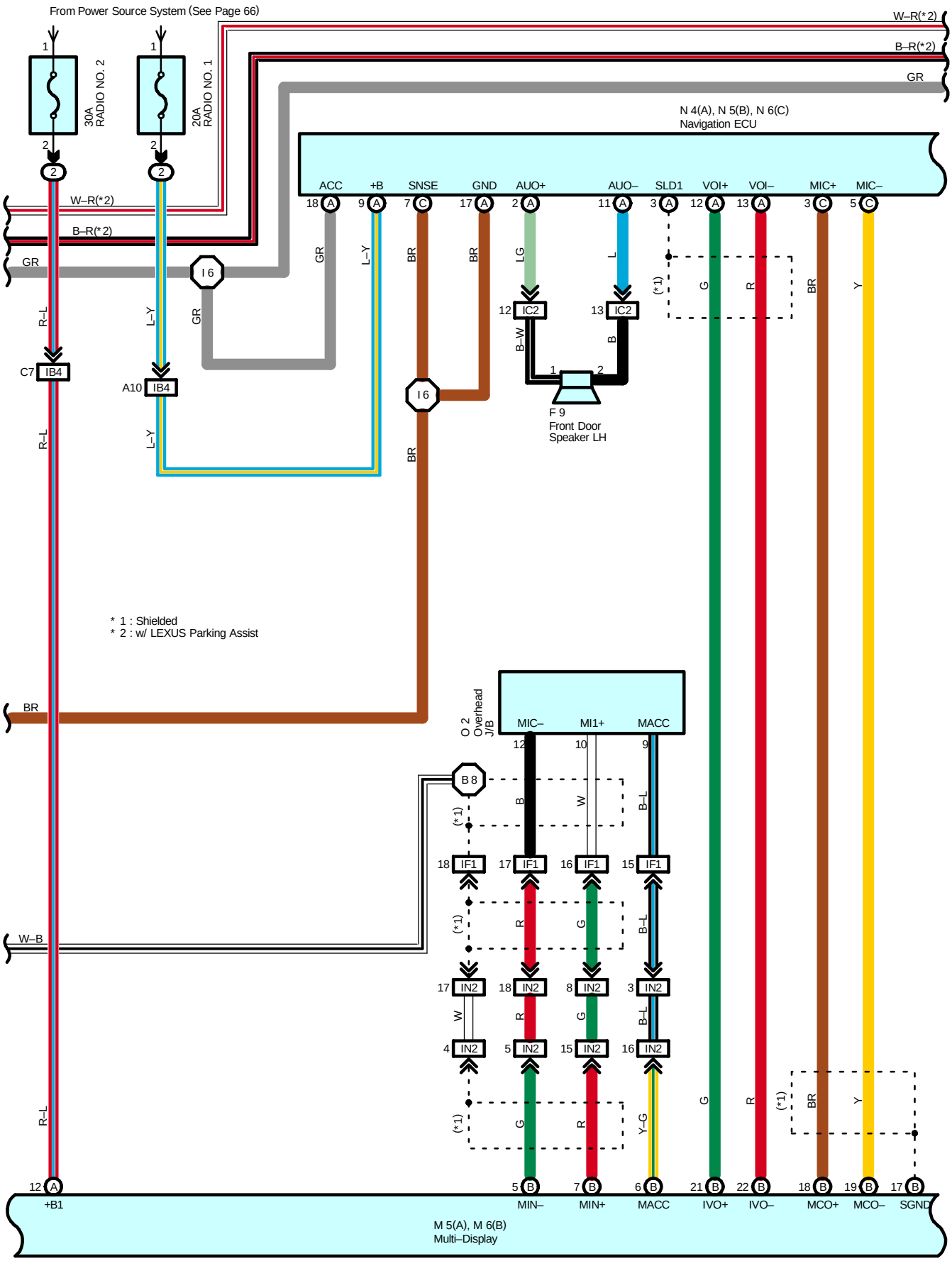
From Power Source System (See Page 66)
W–R(*2)
B–R(*2)
GR
30A RADIO NO. 2
20A RADIO NO. 1
N 4(A), N 5(B), N 6(C)
Navigation ECU
ACC
+B
SNSE
GND
AUO+
AUO–
SLD1
VOI+
VOI–
MIC+
MIC–
I 6
C7 IB4
A10 IB4
IC2
F 9
Front Door Speaker LH
* 1 : Shielded
* 2 : w/ LEXUS Parking Assist
O 2 Overhead J/B
MIC–
MI1+
MACC
B 8
IF1
IN2
W–B
+B1
MIN–
MIN+
MACC
IVO+
IVO–
MCO+
MCO–
SGND
M 5(A), M 6(B)
Multi–Display

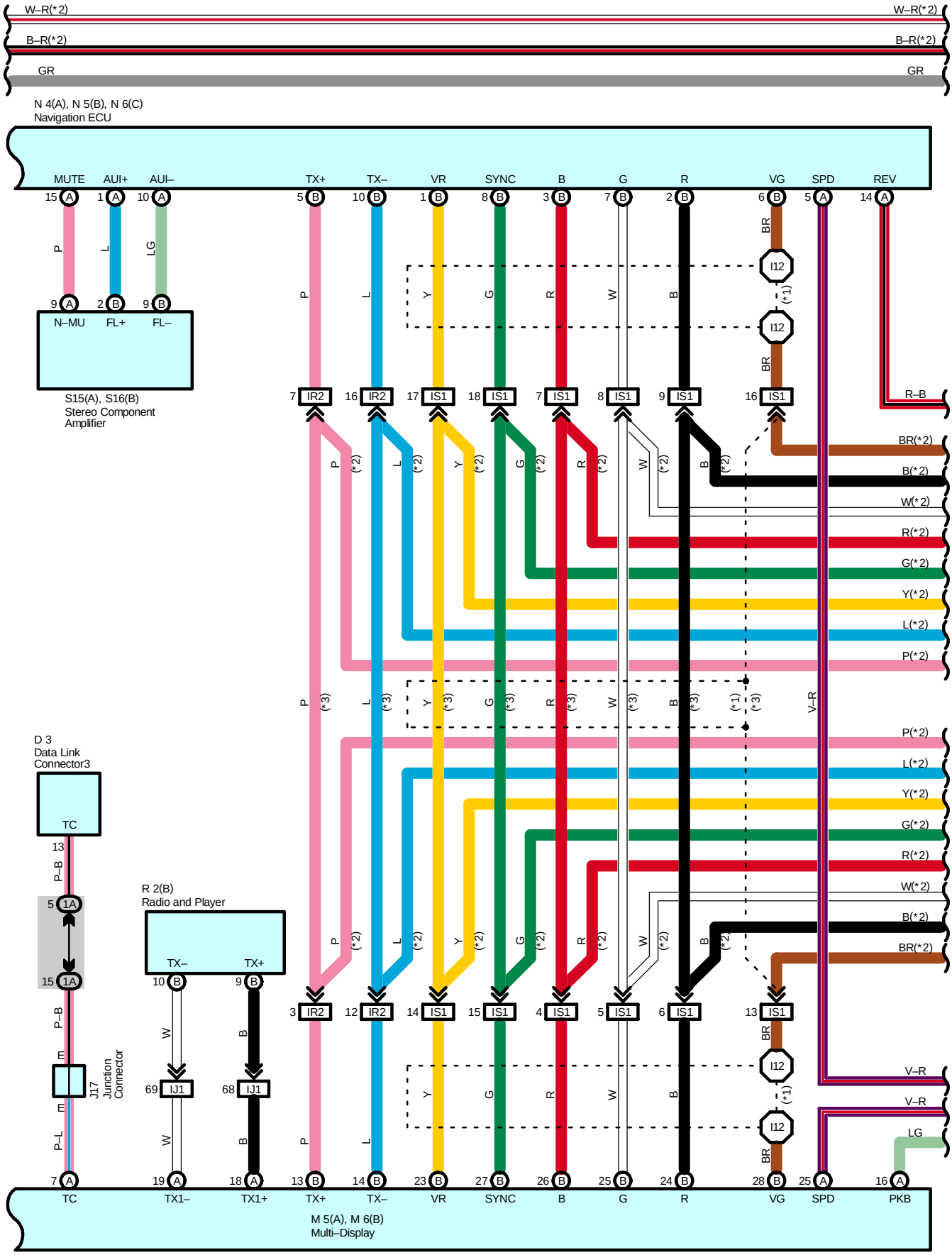
W–R(*2)
B–R(*2)
GR
N 4(A), N 5(B), N 6(C)
Navigation ECU
MUTE
AUI+
AUI–
TX+
TX–
VR
SYNC
B
G
R
VG
SPD
REV
N–MU
FL+
FL–
S15(A), S16(B)
Stereo Component
Amplifier
IR2
IS1
I12
R–B
BR(*2)
B(*2)
W(*2)
R(*2)
G(*2)
Y(*2)
L(*2)
P(*2)
V–R
LG
D 3
Data Link
Connector3
TC
J17
Junction
Connector
R 2(B)
Radio and Player
IJ1
TX1–
TX1+
PKB
M 5(A), M 6(B)
Multi–Display

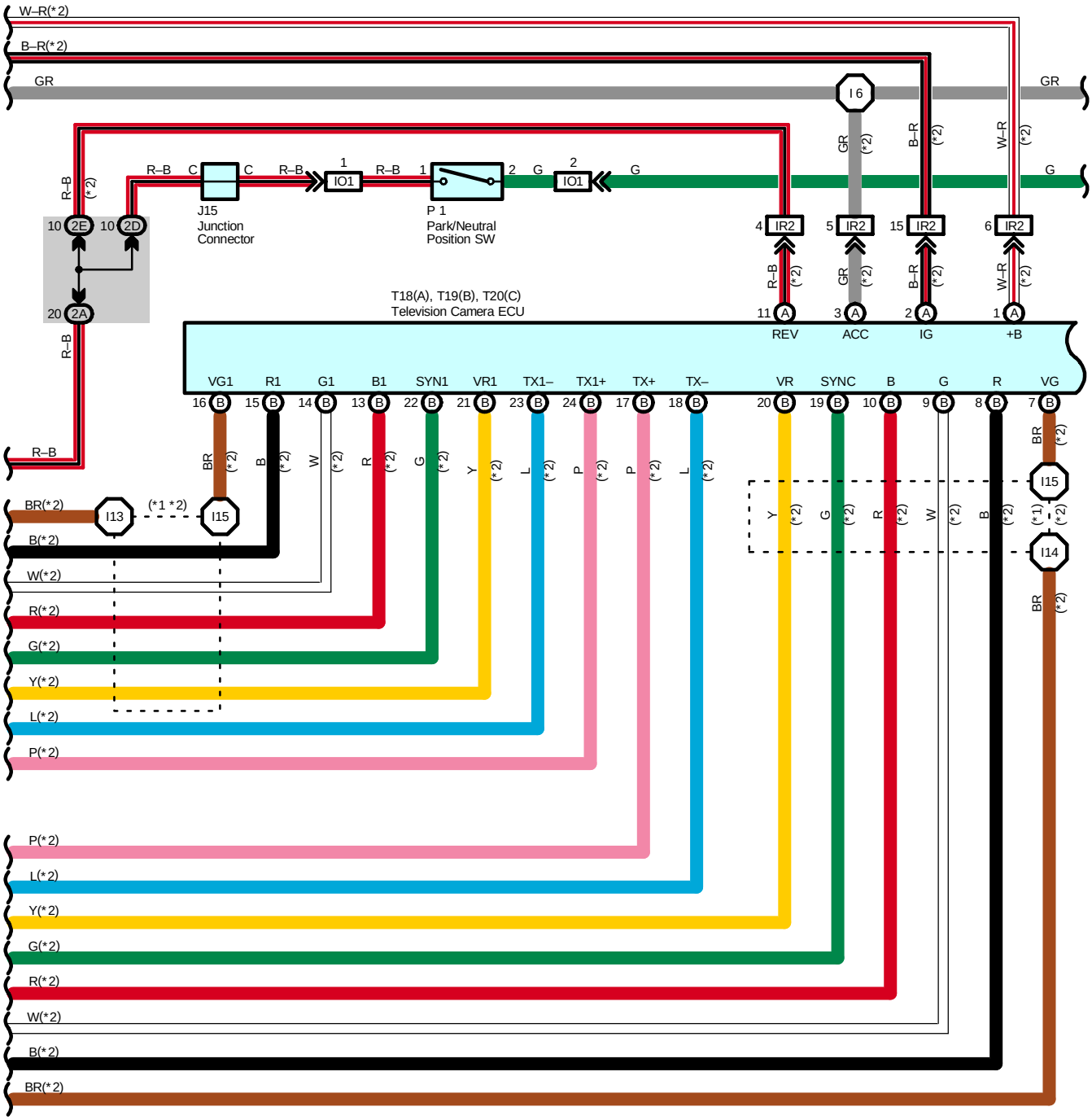
W–R(*2)
B–R(*2)
GR
I6
J15
Junction
Connector
IO1
P 1
Park/Neutral
Position SW
IR2
T18(A), T19(B), T20(C)
Television Camera ECU
REV
ACC
IG
+B
VG1
R1
G1
B1
SYN1
VR1
TX1–
TX1+
TX+
TX–
VR
SYNC
B
G
R
VG
I13
I15
I14
BR(*2)
B(*2)
W(*2)
R(*2)
G(*2)
Y(*2)
L(*2)
P(*2)
(*1 *2)
* 1 : Shielded
* 2 : w/ LEXUS Parking Assist
* 3 : w/o LEXUS Parking Assist

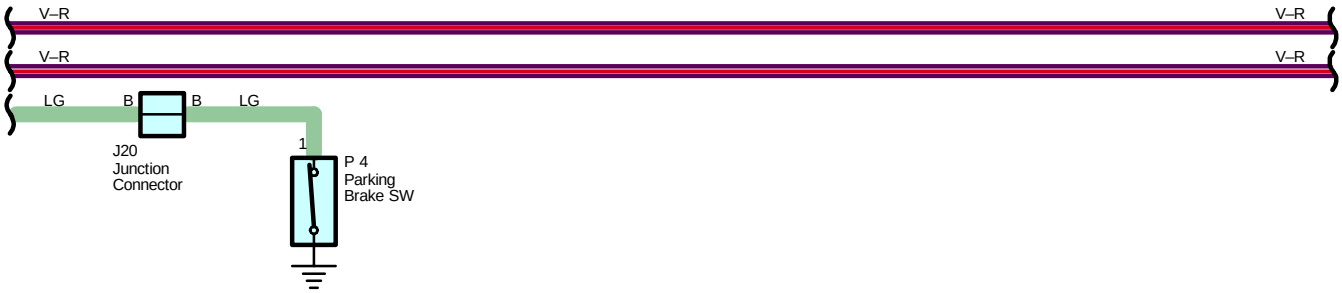
V–R
LG
J20
Junction
Connector
P 4
Parking
Brake SW

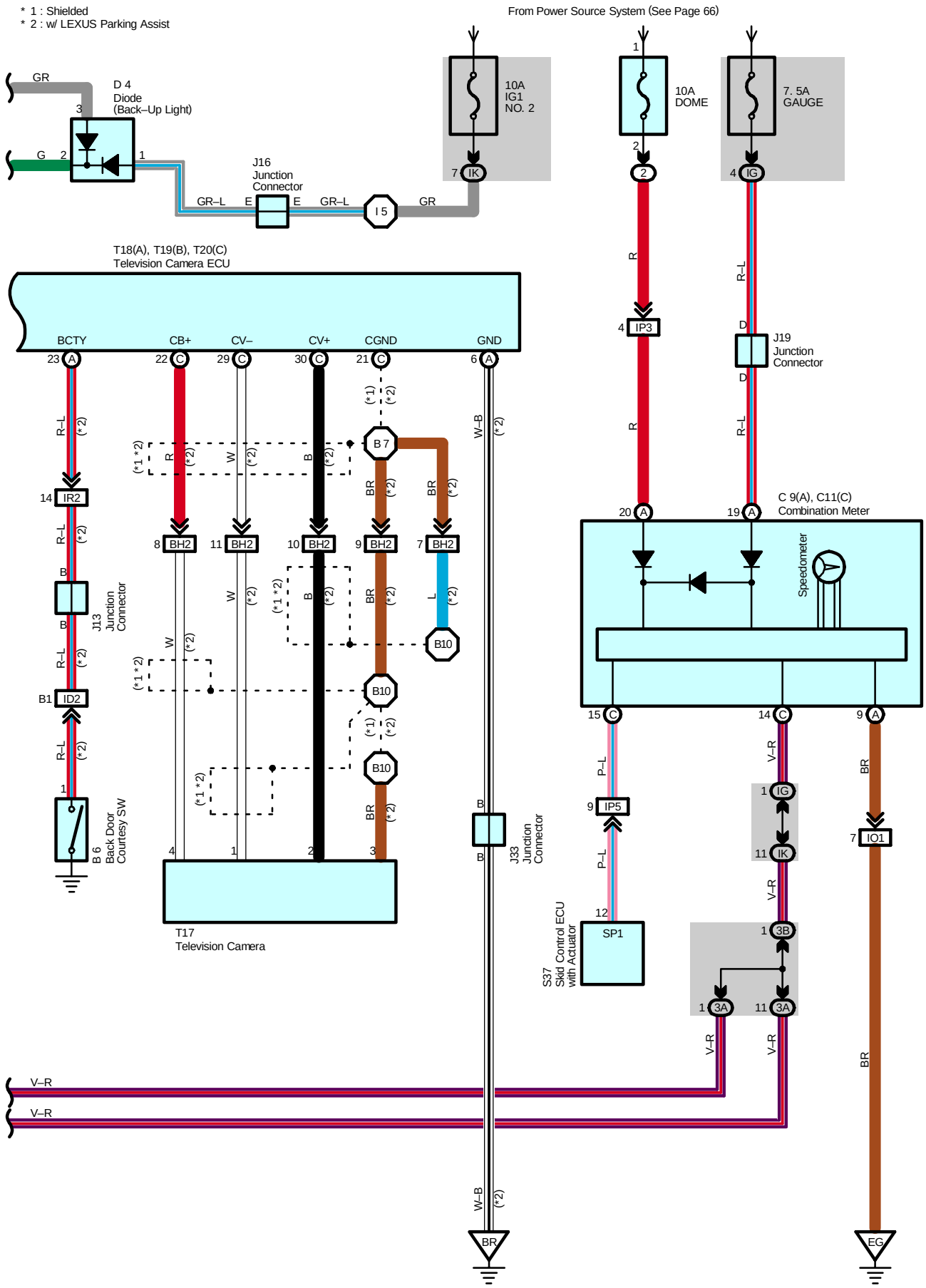
* 1 : Shielded
* 2 : w/ LEXUS Parking Assist
From Power Source System (See Page 66)
D 4
Diode
(Back–Up Light)
J16
Junction
Connector
10A
IG1
NO. 2
10A
DOME
7. 5A
GAUGE
T18(A), T19(B), T20(C)
Television Camera ECU
BCTY
CB+
CV–
CV+
CGND
GND
J19
Junction
Connector
C 9(A), C11(C)
Combination Meter
Speedometer
J13
Junction
Connector
B 6
Back Door
Courtesy SW
T17
Television Camera
J33
Junction
Connector
S37
Skid Control ECU
with Actuator

System Outline

The LEXUS navigation system displays the operating status and instructions for the radio and player. Additionally, the navigation system precisely measures the current vehicle position, displays the map obtained from the map database on the screen, and informs the route to the destination shown on the map using voice guidance.

Service Hints

N4 (A), N6 (C) Navigation ECU

(A)18–Ground : Approx. 12 volts with the ignition SW at ON or ACC position
(A) 9–Ground : Always approx. 12 volts
(A)17, (C) 7–Ground: Always continuity

T18 (A) Television Camera ECU

(A) 1–Ground : Always approx. 12 volts
(A) 3–Ground : Approx. 12 volts with the ignition SW at ON or ACC position
(A) 6–Ground : Always continuity
(A) 2–Ground : Approx. 12 volts with the ignition SW at ON position

○ : Parts Location

Code		See Page	Code		See Page	Code		See Page
A15	C	38	J16		40	O2		44
B6		42	J17		40	P1		37
C9	A	38	J19		40	P4		40
C11	C	38	J20		40	R2	B	41
D3		39	J22		40	S15	A	41
D4		39	J33		43	S16	B	41
F9		43	M5	A	40	S37		37
G3		39	M6	B	40	T17		45
J13		40	N4	A	40	T18	A	41
J14		40	N5	B	40	T19	B	41
J15		40	N6	C	40	T20	C	41

▭ : Relay Blocks

Code	See Page	Relay Blocks (Relay Block Location)
2	22	Engine Room R/B (Engine Compartment Left)

▭ : Junction Block and Wire Harness Connector

Code	See Page	Junction Block and Wire Harness (Connector Location)
IB	26	Engine Room Main Wire and Driver Side J/B (Lower Finish Panel)
IG	27	Instrument Panel Wire and Driver Side J/B (Lower Finish Panel)
IJ		
IK		
IL		
1A	30	Instrument Panel Wire and J/B No.1 (Instrument Panel Reinforcement Left)
1B		
1C		
1D		
2A	32	Instrument Panel Wire and J/B No.2 (Instrument Panel Reinforcement Center)
2D		
2E		
3A	34	Instrument Panel Wire and J/B No.3 (Instrument Panel Reinforcement Right)
3B		

: Connector Joining Wire Harness and Wire Harness

Code	See Page	Joining Wire Harness and Wire Harness (Connector Location)
IB4	50	Instrument Panel Wire and Engine Room Main Wire (Left Kick Panel)
IC2	50	Front Door LH Wire and Instrument Panel Wire (Left Kick Panel)
ID2	50	Instrument Panel Wire and Floor No.2 Wire (Left Kick Panel)
IF1	52	Roof Wire and Instrument Panel Wire (Upper the Driver Side J/B)
IH1	52	Instrument Panel Wire and Instrument Panel Wire (Near the J/B No.1)
IJ1	52	Instrument Panel Wire and Instrument Panel No.2 Wire (Instrument Panel Brace LH)
IN2	54	Instrument Panel Wire and Instrument Panel Wire (Under the Instrument Panel Brace RH)
IO1	54	Engine Wire and Instrument Panel Wire (Right Side of the Blower Unit)
IP3	54	Instrument Panel Wire and Engine Room Main Wire (Right Kick Panel)
IP5		
IR2	56	Instrument Panel Wire and Floor Wire (Right Kick Panel)
IS1	56	Instrument Panel Wire and Floor Wire (Under the Front Passenger's Seat)
BH2	60	Back Door No.1 Wire and Floor Wire (Right Quarter Panel Inner)

: Ground Points

Code	See Page	Ground Points Location
EG	48	Rear Bank of Left Cylinder Head
IJ	50	Near the Right Side of Steering Column
IK	50	Instrument Panel Brace LH
BR	58	Right Quarter Panel Inner

: Splice Points

Code	See Page	Wire Harness with Splice Points	Code	See Page	Wire Harness with Splice Points
I5	52	Instrument Panel Wire	I15	52	Floor Wire
I6			B7	60	
I12			B8	60	Roof Wire
I13	52	Floor Wire	B10	60	Back Door No.1 Wire
I14					

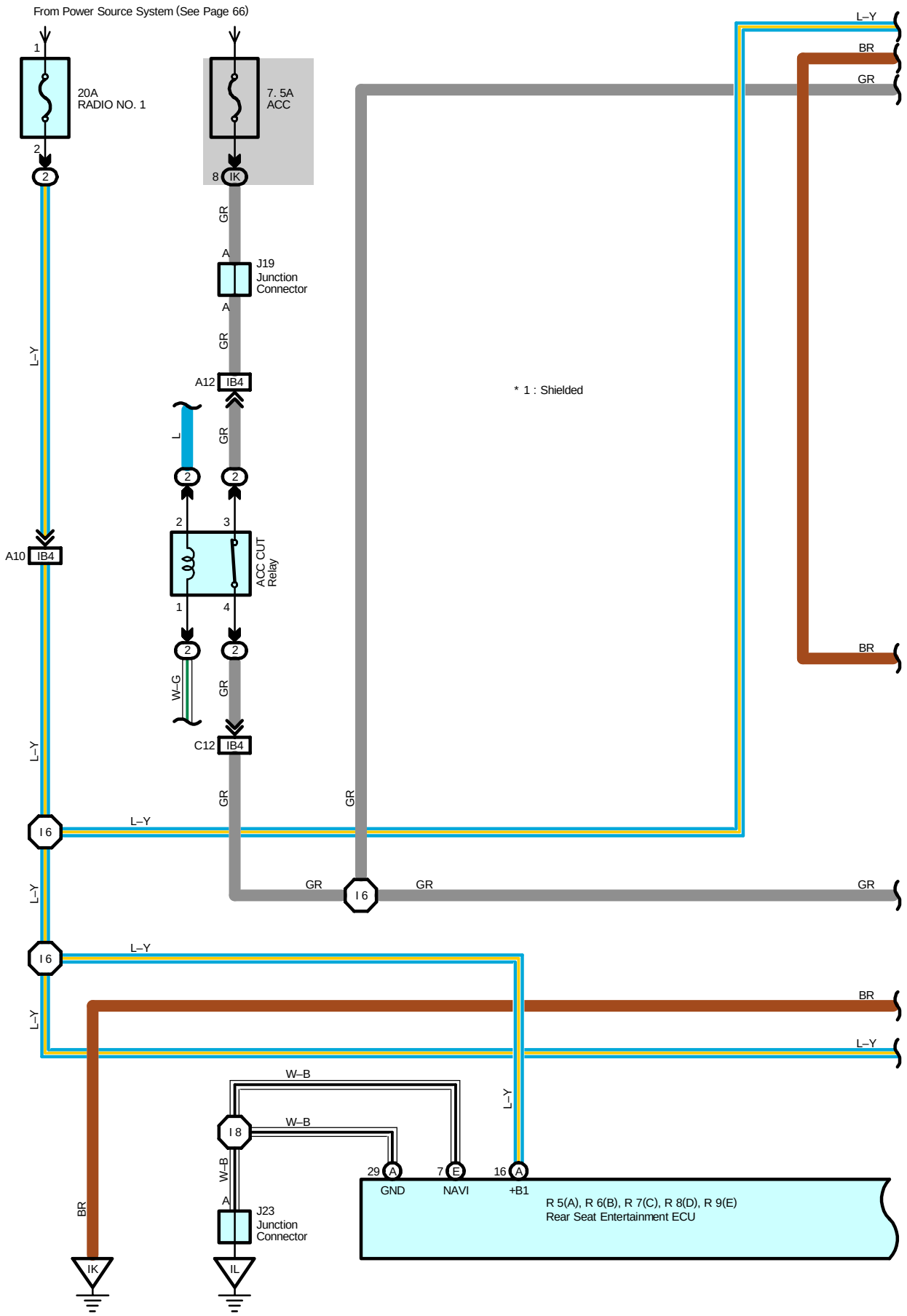
From Power Source System (See Page 66)
20A
RADIO NO. 1
7. 5A
ACC
J19
Junction
Connector
A12 IB4
A10 IB4
C12 IB4
ACC CUT
Relay
* 1 : Shielded
L–Y
BR
GR
W–G
W–B
I 6
I 8
J23
Junction
Connector
IK
IL
GND
NAVI
+B1
R 5(A), R 6(B), R 7(C), R 8(D), R 9(E)
Rear Seat Entertainment ECU

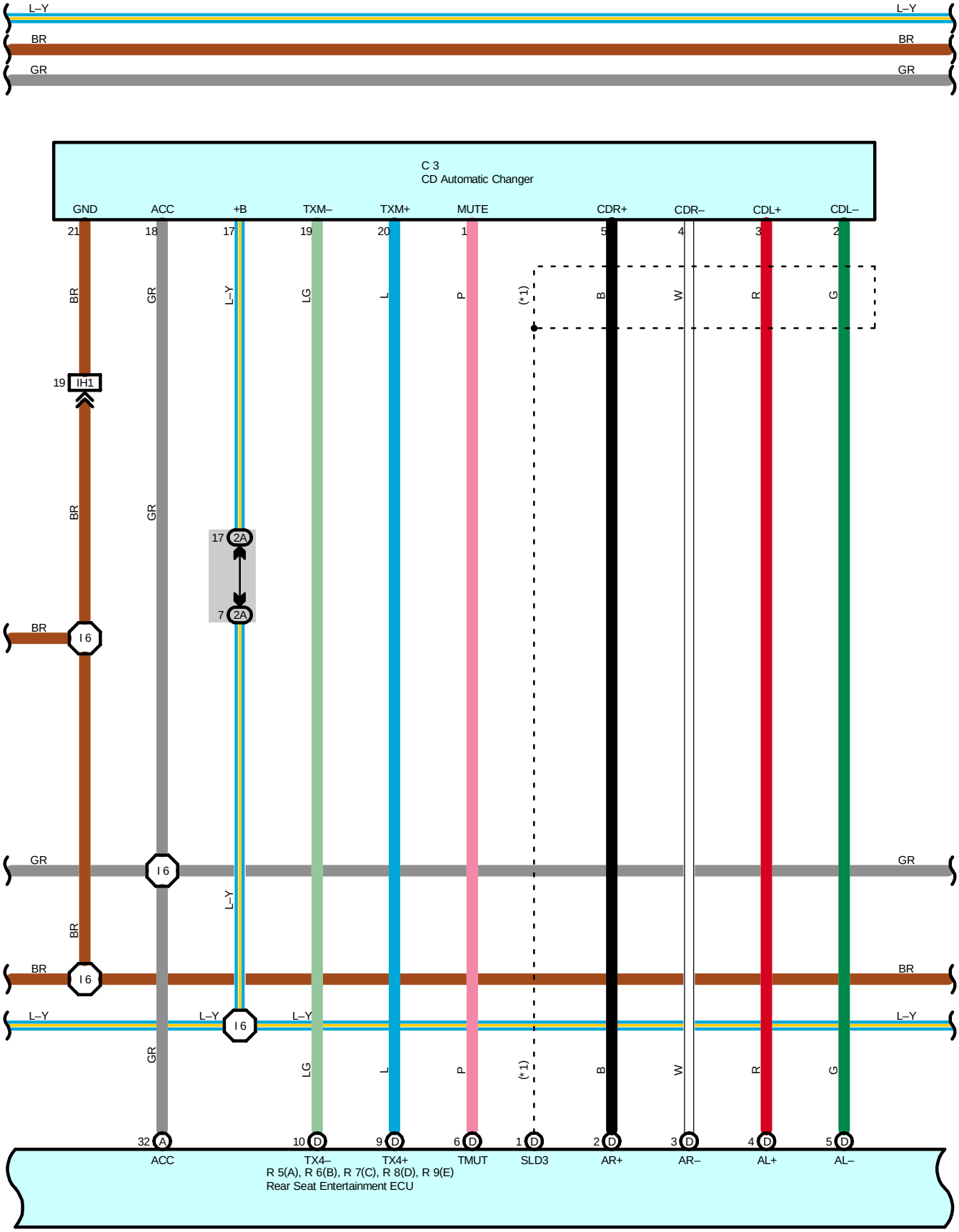
L–Y
BR
GR
C 3
CD Automatic Changer
GND
ACC
+B
TXM–
TXM+
MUTE
CDR+
CDR–
CDL+
CDL–
21
18
17
19
20
1
5
4
3
2
BR
GR
L–Y
LG
L
P
(*1)
B
W
R
G
19
IH1
17
2A
7
2A
I 6
32
A
10
D
9
D
6
D
1
D
2
D
3
D
4
D
5
D
ACC
TX4–
TX4+
TMUT
SLD3
AR+
AR–
AL+
AL–
R 5(A), R 6(B), R 7(C), R 8(D), R 9(E)
Rear Seat Entertainment ECU

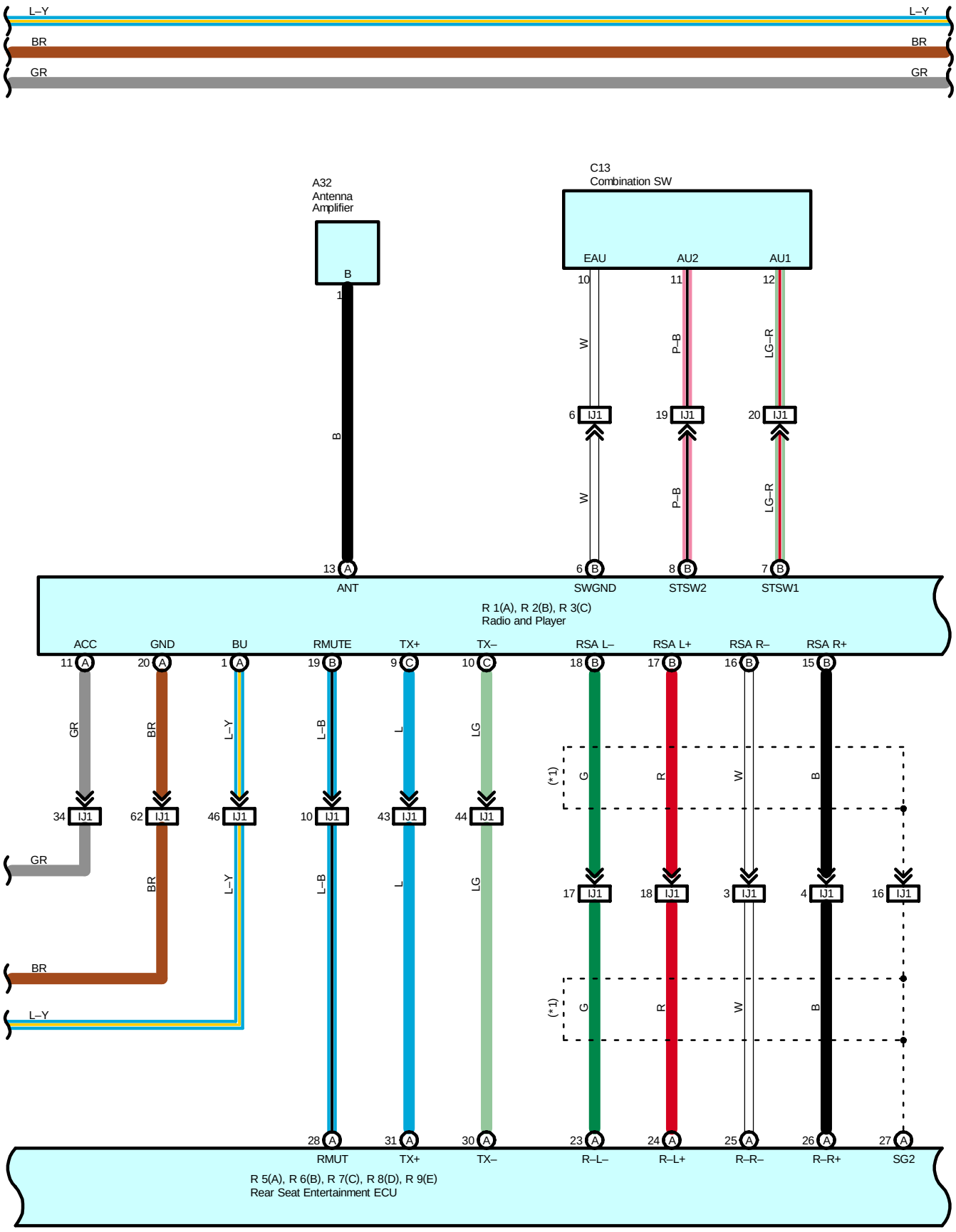
L–Y
BR
GR
A32
Antenna
Amplifier
B
1
B
13 A
ANT
C13
Combination SW
EAU
AU2
AU1
10
11
12
W
P–B
LG–R
6 IJ1
19 IJ1
20 IJ1
W
P–B
LG–R
6 B
8 B
7 B
SWGND
STSW2
STSW1
R 1(A), R 2(B), R 3(C)
Radio and Player
ACC
GND
BU
RMUTE
TX+
TX–
RSA L–
RSA L+
RSA R–
RSA R+
11 A
20 A
1 A
19 B
9 C
10 C
18 B
17 B
16 B
15 B
GR
BR
L–Y
L–B
L
LG
(*1)
G
R
W
B
34 IJ1
62 IJ1
46 IJ1
10 IJ1
43 IJ1
44 IJ1
GR
BR
L–Y
L–B
L
LG
17 IJ1
18 IJ1
3 IJ1
4 IJ1
16 IJ1
BR
L–Y
(*1)
G
R
W
B
28 A
31 A
30 A
23 A
24 A
25 A
26 A
27 A
RMUT
TX+
TX–
R–L–
R–L+
R–R–
R–R+
SG2
R 5(A), R 6(B), R 7(C), R 8(D), R 9(E)
Rear Seat Entertainment ECU

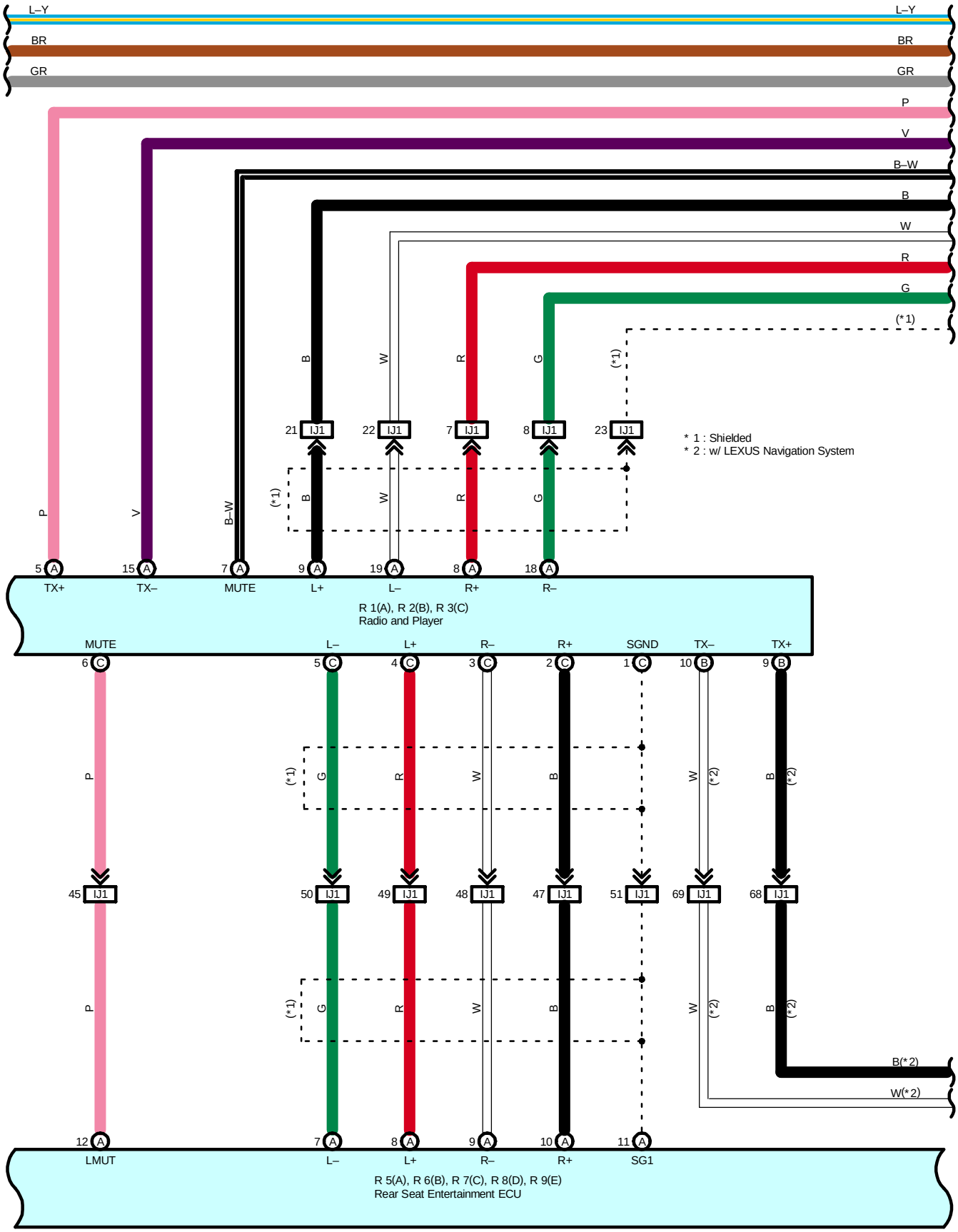
L–Y
BR
GR
P
V
B–W
B
W
R
G
(*1)
21 IJ1
22 IJ1
7 IJ1
8 IJ1
23 IJ1
* 1 : Shielded
* 2 : w/ LEXUS Navigation System
5 A TX+
15 A TX–
7 A MUTE
9 A L+
19 A L–
8 A R+
18 A R–
R 1(A), R 2(B), R 3(C)
Radio and Player
MUTE
L–
L+
R–
R+
SGND
TX–
TX+
6 C
5 C
4 C
3 C
2 C
1 C
10 B
9 B
45 IJ1
50 IJ1
49 IJ1
48 IJ1
47 IJ1
51 IJ1
69 IJ1
68 IJ1
B(*2)
W(*2)
12 A LMUT
7 A L–
8 A L+
9 A R–
10 A R+
11 A SG1
R 5(A), R 6(B), R 7(C), R 8(D), R 9(E)
Rear Seat Entertainment ECU

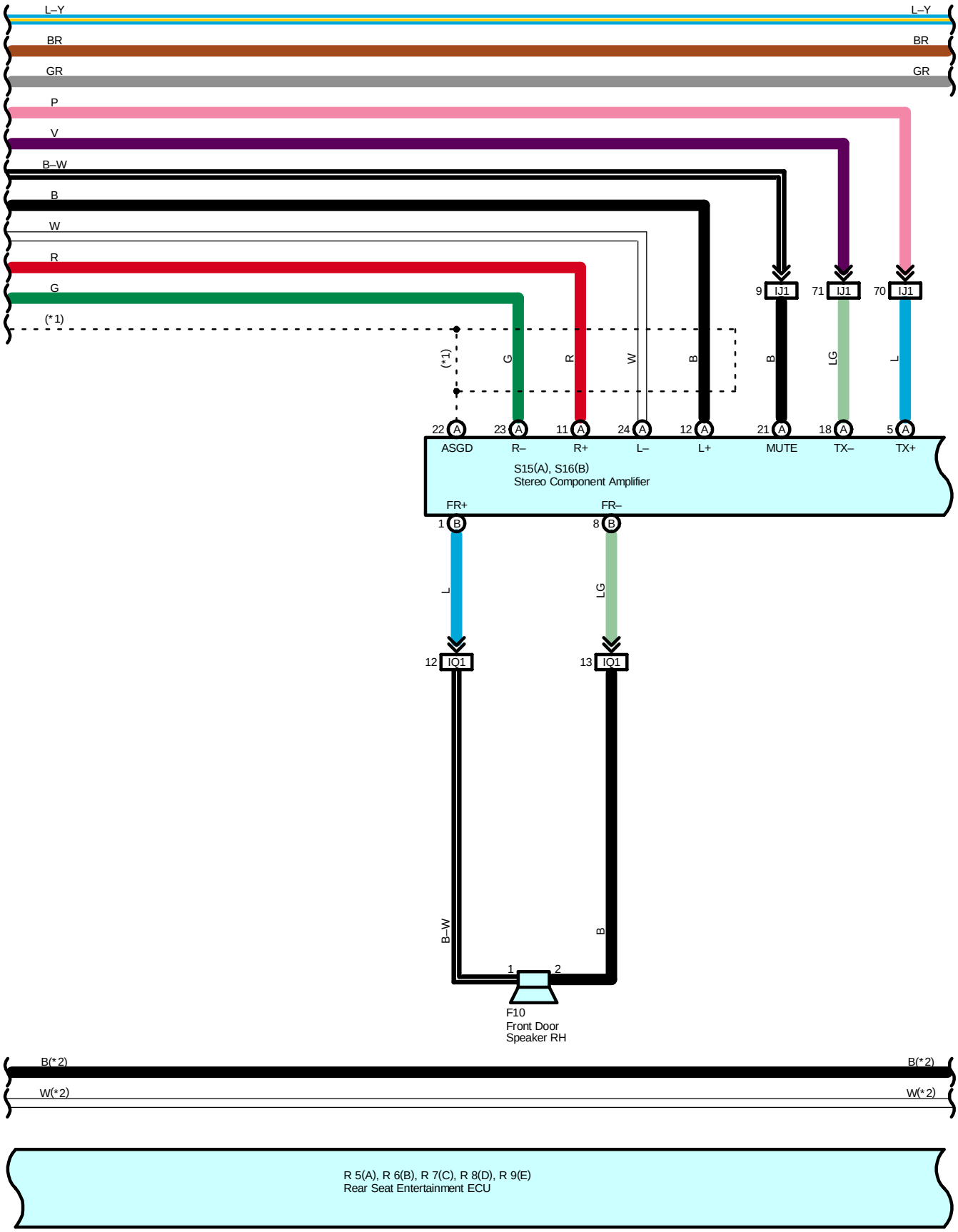
L–Y
BR
GR
P
V
B–W
B
W
R
G
(*1)
9 IJ1
71 IJ1
70 IJ1
22 A ASGD
23 A R–
11 A R+
24 A L–
12 A L+
21 A MUTE
18 A TX–
5 A TX+
S15(A), S16(B)
Stereo Component Amplifier
FR+
FR–
1 B
8 B
12 IQ1
13 IQ1
1
2
F10
Front Door
Speaker RH
B(*2)
W(*2)
R 5(A), R 6(B), R 7(C), R 8(D), R 9(E)
Rear Seat Entertainment ECU

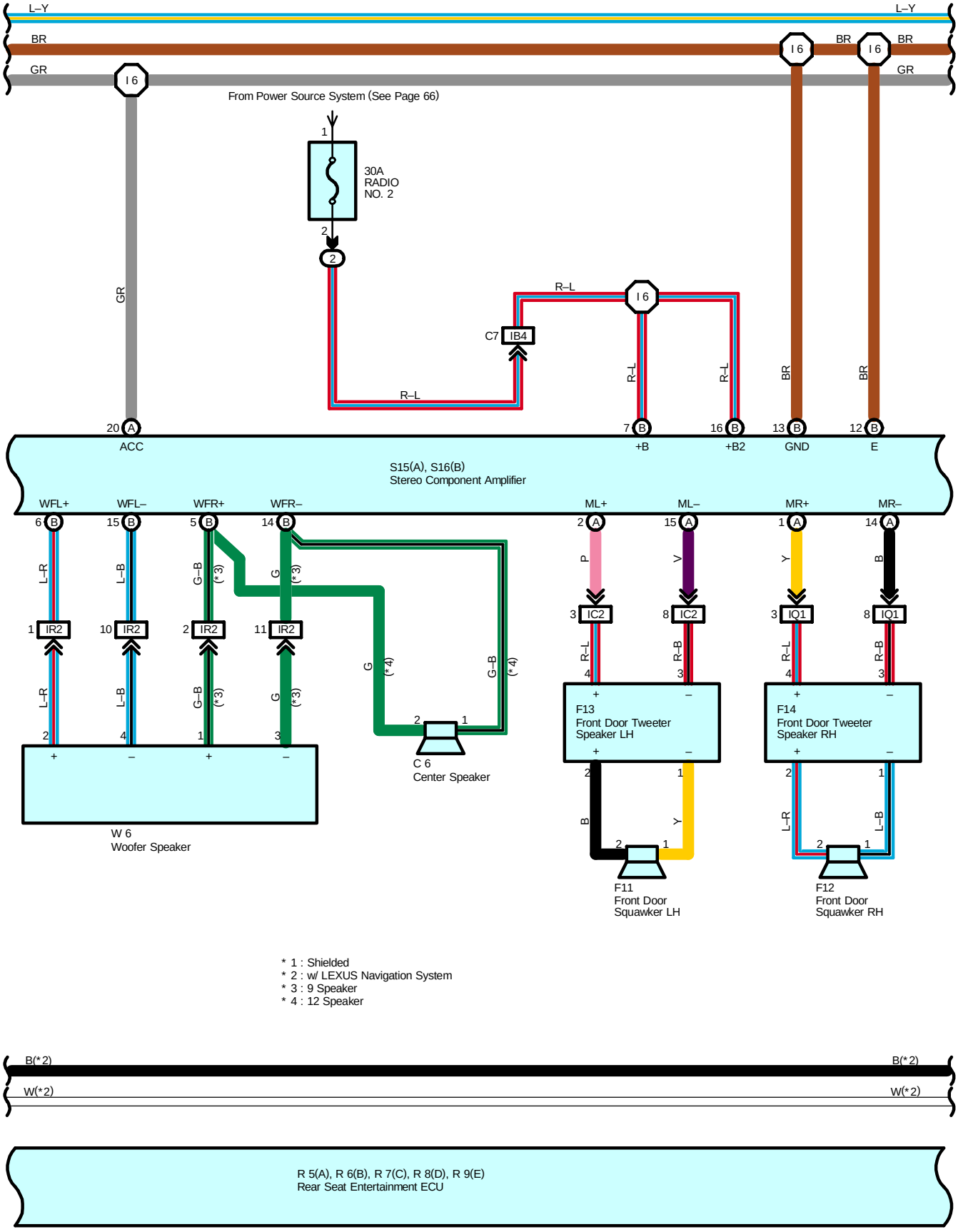
L–Y
BR
GR
I 6
From Power Source System (See Page 66)
30A
RADIO
NO. 2
R–L
C7
IB4
20 A
ACC
7 B
+B
16 B
+B2
13 B
GND
12 B
E
S15(A), S16(B)
Stereo Component Amplifier
WFL+
WFL–
WFR+
WFR–
ML+
ML–
MR+
MR–
IR2
IC2
IQ1
F13
Front Door Tweeter
Speaker LH
F14
Front Door Tweeter
Speaker RH
C 6
Center Speaker
W 6
Woofer Speaker
F11
Front Door
Squawker LH
F12
Front Door
Squawker RH
* 1 : Shielded
* 2 : w/ LEXUS Navigation System
* 3 : 9 Speaker
* 4 : 12 Speaker
B(*2)
W(*2)
R 5(A), R 6(B), R 7(C), R 8(D), R 9(E)
Rear Seat Entertainment ECU

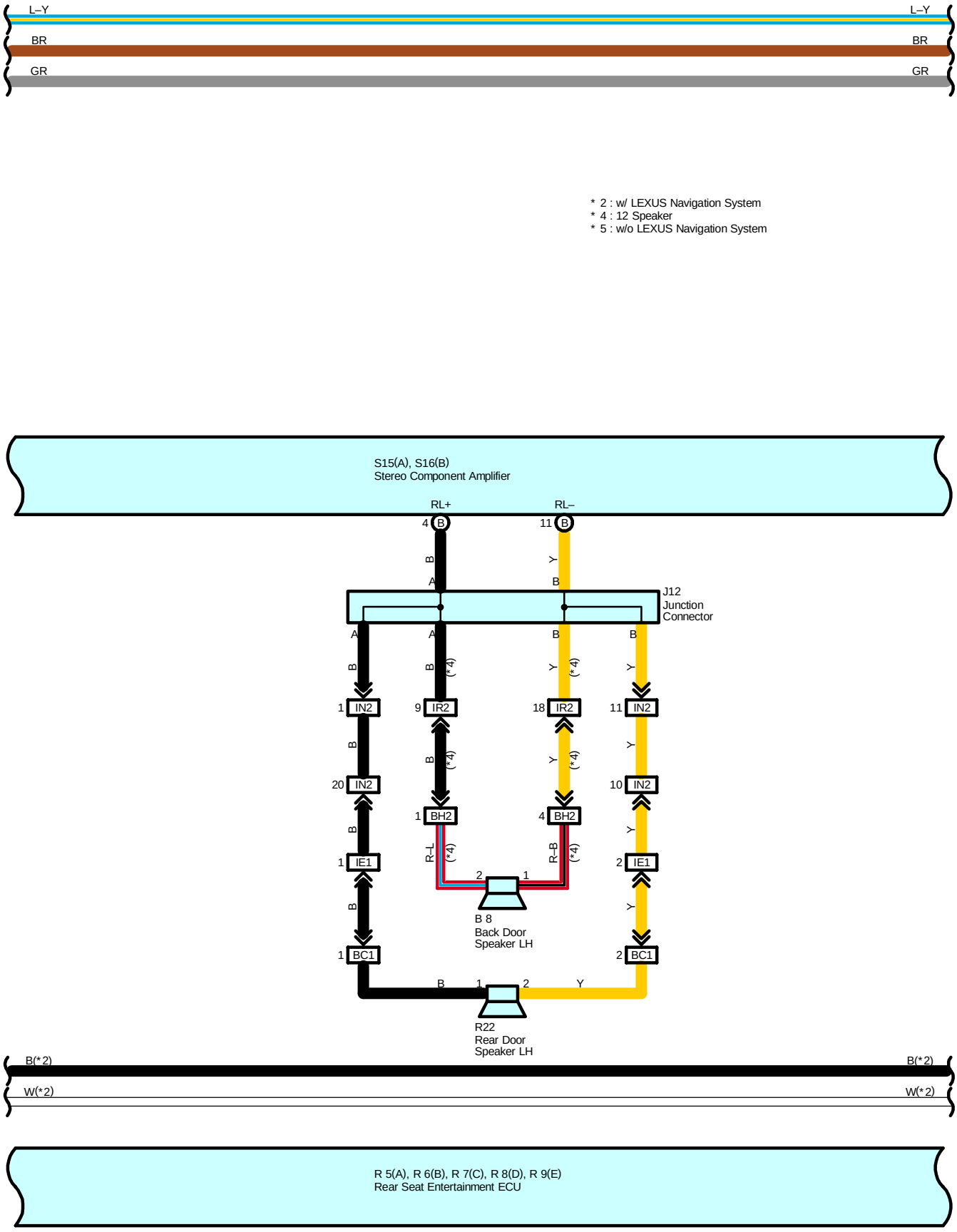
L–Y
L–Y
BR
BR
GR
GR
* 2 : w/ LEXUS Navigation System
* 4 : 12 Speaker
* 5 : w/o LEXUS Navigation System
S15(A), S16(B)
Stereo Component Amplifier
RL+
RL–
4 B
11 B
B
Y
A
B
J12
Junction
Connector
A
A
B
B
B
B
Y
Y
(*4)
(*4)
(*4)
(*4)
1 IN2
9 IR2
18 IR2
11 IN2
B
B
Y
Y
20 IN2
10 IN2
1 BH2
4 BH2
B
Y
R–L
R–B
(*4)
(*4)
1 IE1
2 IE1
2
1
B
Y
B 8
Back Door
Speaker LH
1 BC1
2 BC1
B
1
2
Y
R22
Rear Door
Speaker LH
B(*2)
B(*2)
W(*2)
W(*2)
R 5(A), R 6(B), R 7(C), R 8(D), R 9(E)
Rear Seat Entertainment ECU

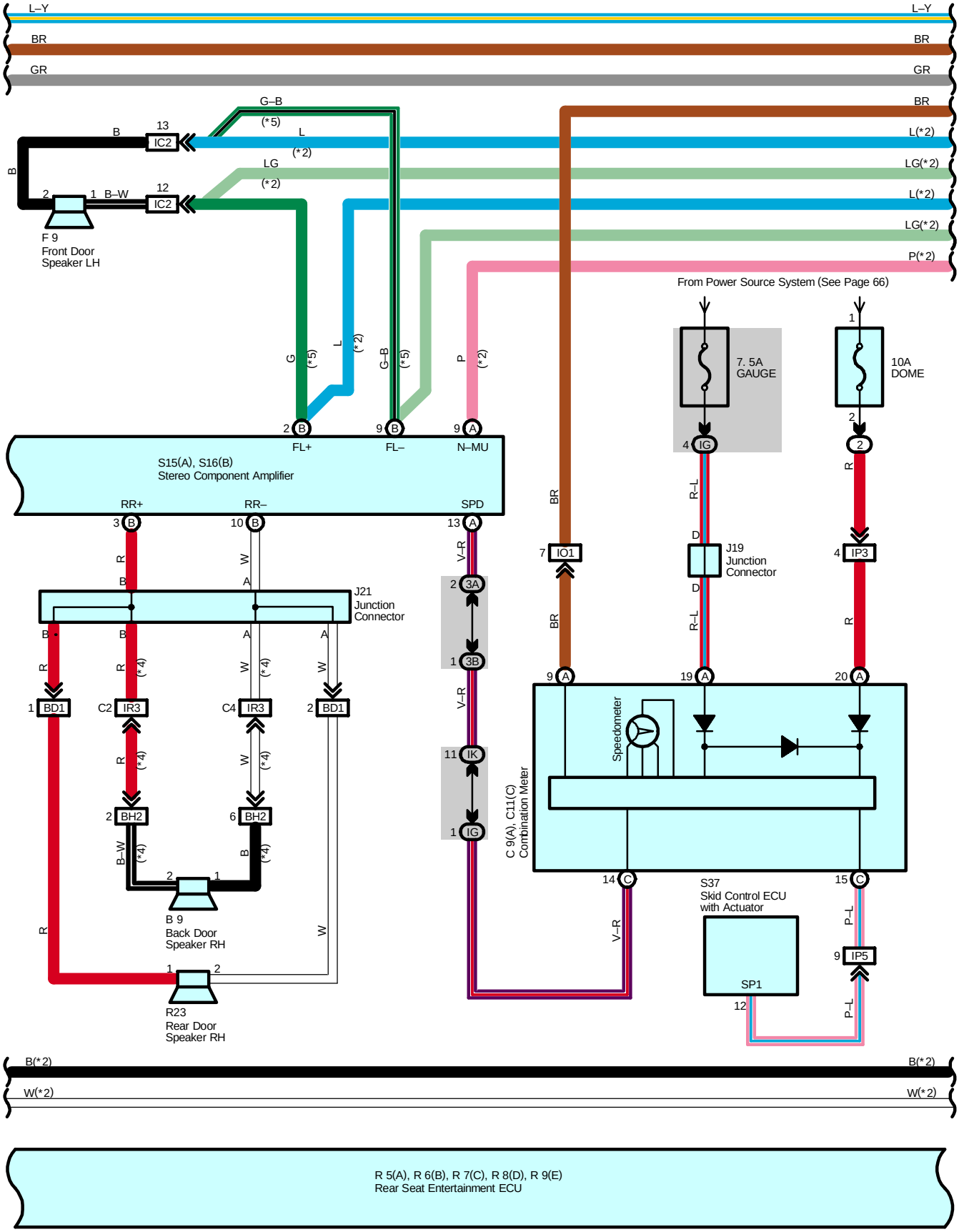
L–Y
BR
GR
G–B
(*5)
L
(*2)
LG
(*2)
B
13
IC2
12
IC2
2
1
B–W
F 9
Front Door
Speaker LH
L(*2)
LG(*2)
P(*2)
From Power Source System (See Page 66)
7. 5A
GAUGE
10A
DOME
S15(A), S16(B)
Stereo Component Amplifier
FL+
FL–
N–MU
RR+
RR–
SPD
J21
Junction
Connector
BD1
IR3
BH2
B 9
Back Door
Speaker RH
R23
Rear Door
Speaker RH
3A
3B
IK
IG
IO1
J19
Junction
Connector
IP3
IP5
Speedometer
C 9(A), C11(C)
Combination Meter
S37
Skid Control ECU
with Actuator
SP1
B(*2)
W(*2)
R 5(A), R 6(B), R 7(C), R 8(D), R 9(E)
Rear Seat Entertainment ECU

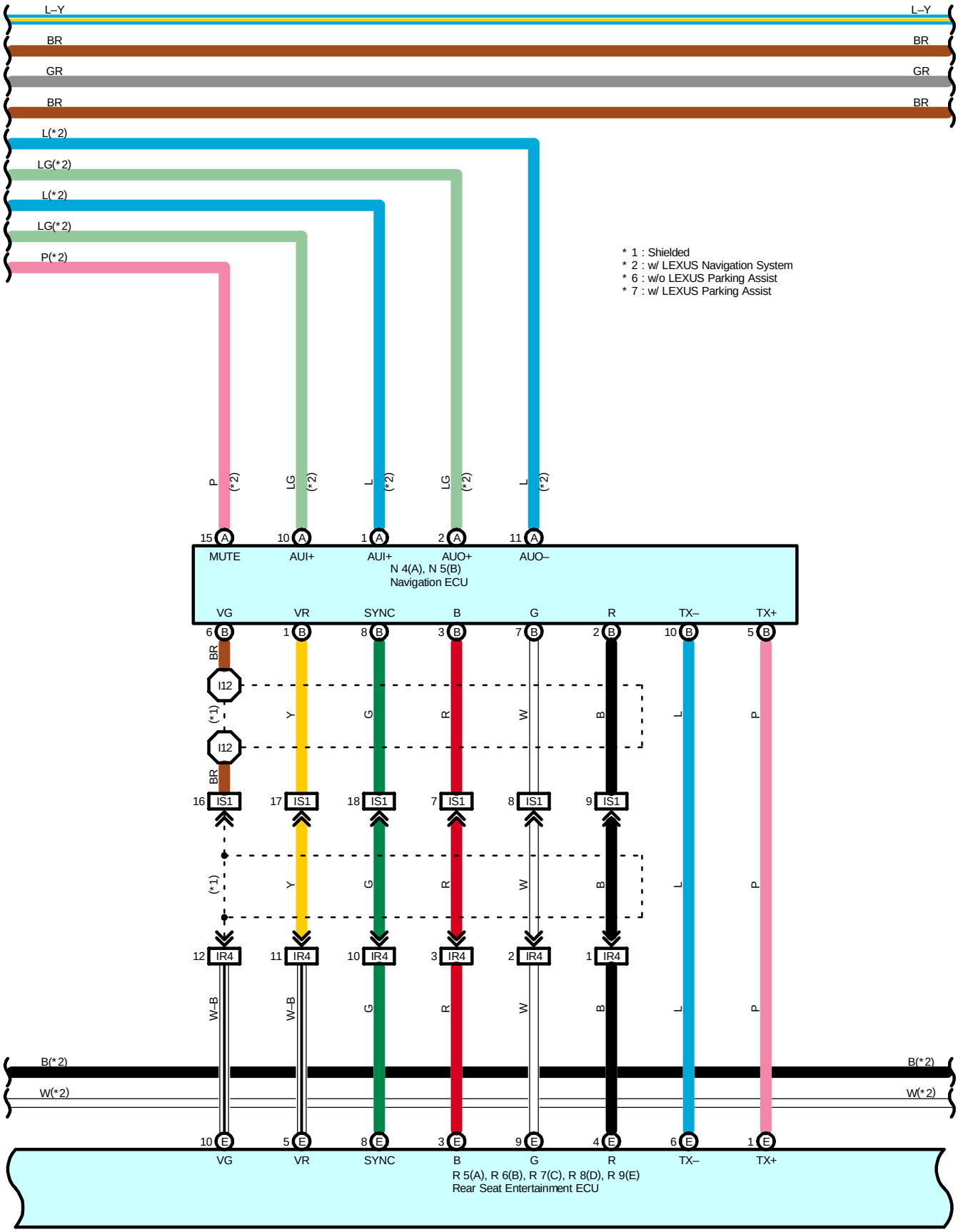
L–Y
BR
GR
BR
L(*2)
LG(*2)
L(*2)
LG(*2)
P(*2)
* 1 : Shielded
* 2 : w/ LEXUS Navigation System
* 6 : w/o LEXUS Parking Assist
* 7 : w/ LEXUS Parking Assist
15 A MUTE
10 A AUI+
1 A AUI+
2 A AUO+
11 A AUO–
N 4(A), N 5(B)
Navigation ECU
VG
VR
SYNC
B
G
R
TX–
TX+
I12
IS1
IR4
W–B
B(*2)
W(*2)
10 E VG
5 E VR
8 E SYNC
3 E B
9 E G
4 E R
6 E TX–
1 E TX+
R 5(A), R 6(B), R 7(C), R 8(D), R 9(E)
Rear Seat Entertainment ECU

L–Y
BR
GR
BR
L–Y
BR
GR
BR

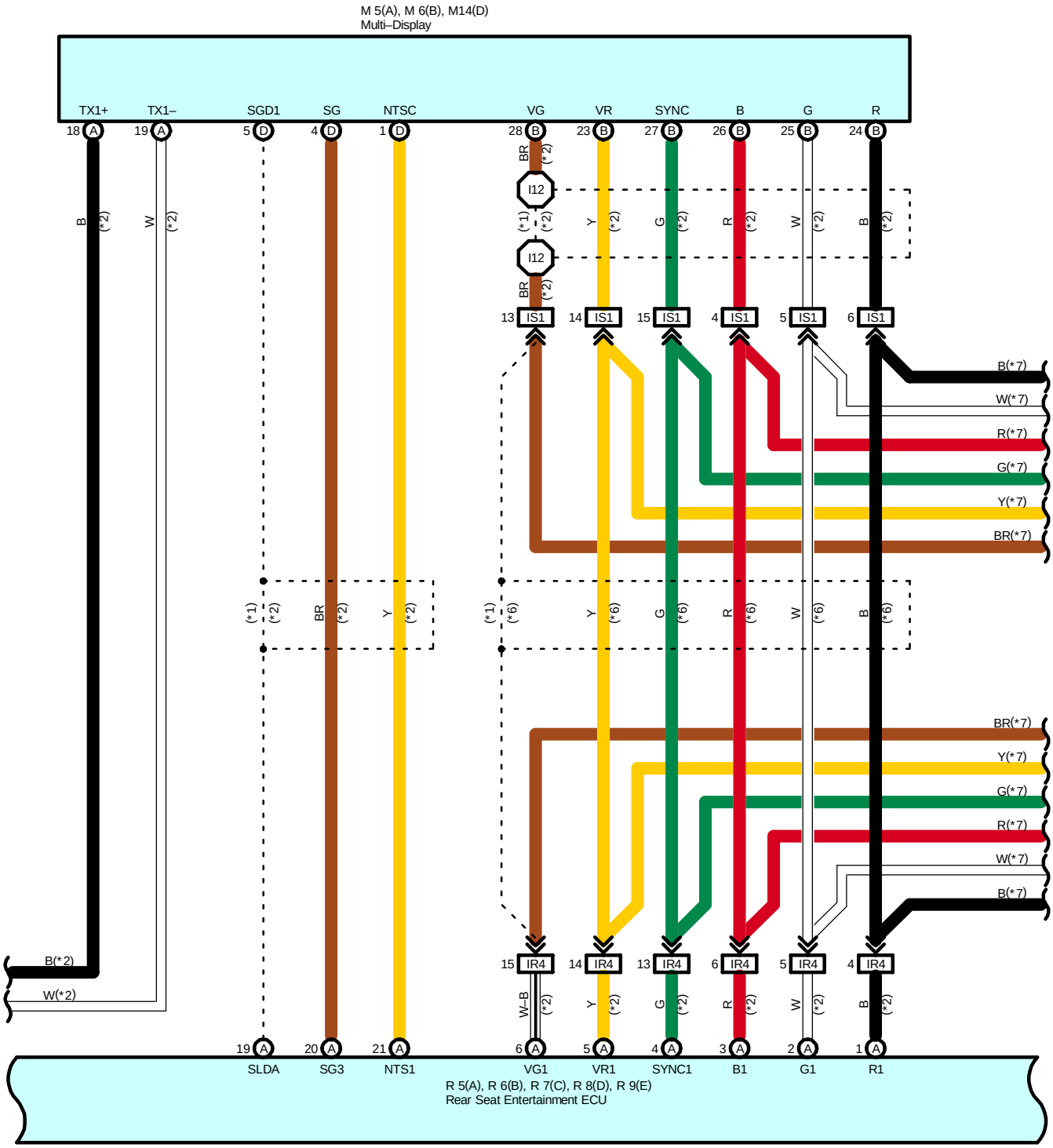
M 5(A), M 6(B), M14(D)
Multi–Display
TX1+
TX1–
SGD1
SG
NTSC
VG
VR
SYNC
B
G
R
18 A
19 A
5 D
4 D
1 D
28 B
23 B
27 B
26 B
25 B
24 B
I12
I12
13 IS1
14 IS1
15 IS1
4 IS1
5 IS1
6 IS1
B(*7)
W(*7)
R(*7)
G(*7)
Y(*7)
BR(*7)
BR(*7)
Y(*7)
G(*7)
R(*7)
W(*7)
B(*7)
B(*2)
W(*2)
15 IR4
14 IR4
13 IR4
6 IR4
5 IR4
4 IR4
19 A
20 A
21 A
6 A
5 A
4 A
3 A
2 A
1 A
SLDA
SG3
NTS1
VG1
VR1
SYNC1
B1
G1
R1
R 5(A), R 6(B), R 7(C), R 8(D), R 9(E)
Rear Seat Entertainment ECU

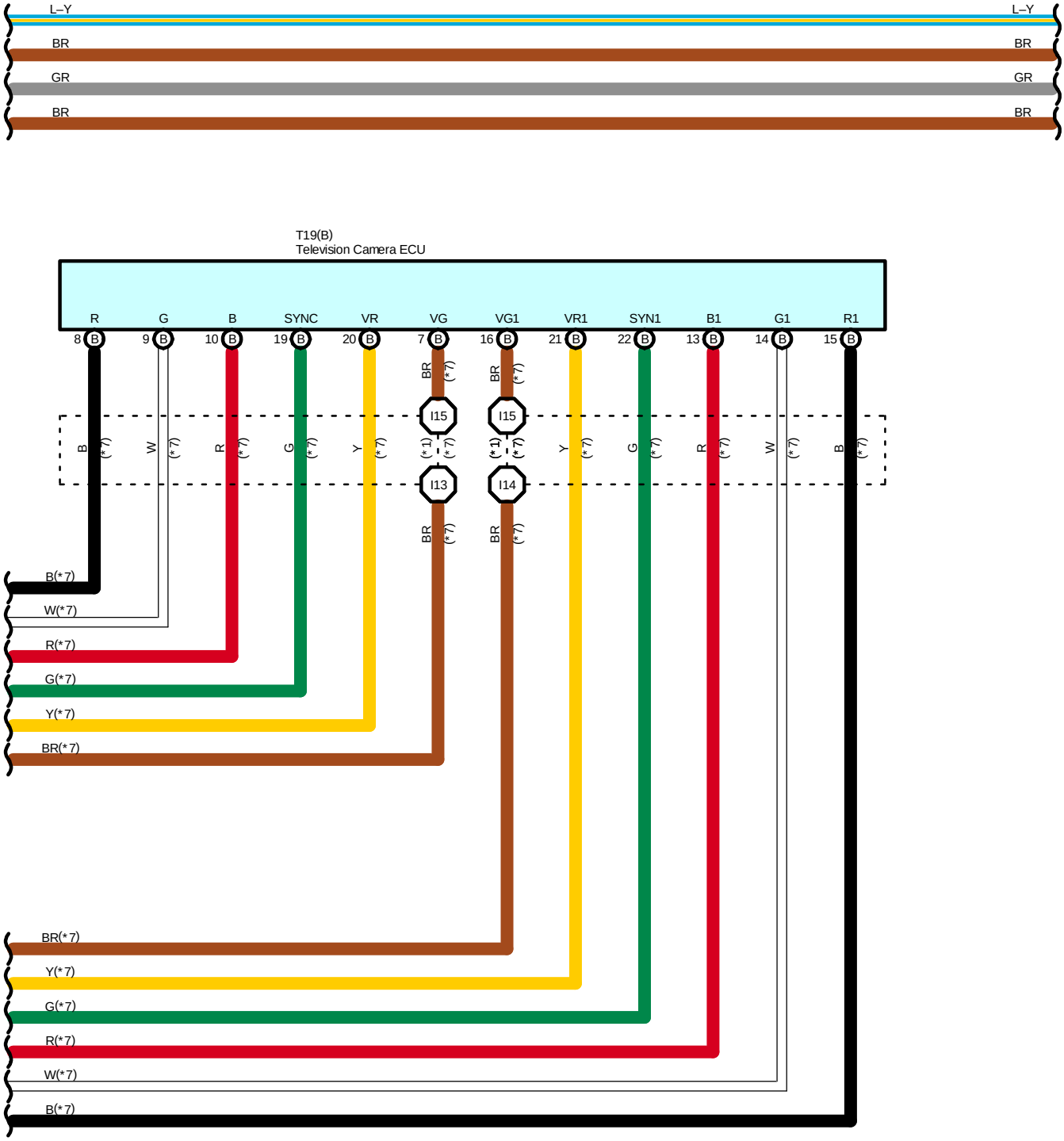

R 5(A), R 6(B), R 7(C), R 8(D), R 9(E)
Rear Seat Entertainment ECU

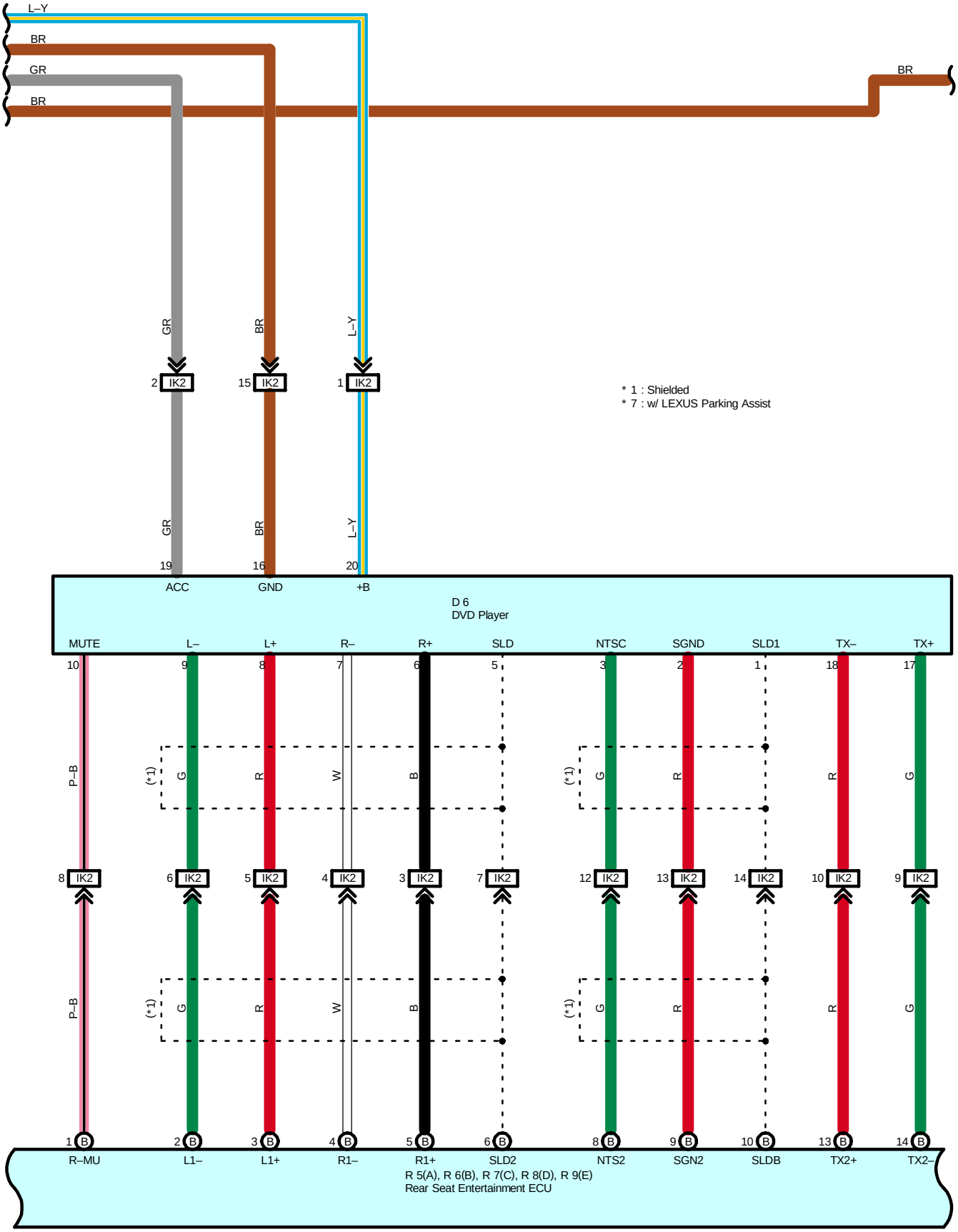
L–Y
BR
GR
BR
BR
GR
BR
L–Y
2 IK2
15 IK2
1 IK2
* 1 : Shielded
* 7 : w/ LEXUS Parking Assist
GR
BR
L–Y
19
16
20
ACC
GND
+B
D 6
DVD Player
MUTE
L–
L+
R–
R+
SLD
NTSC
SGND
SLD1
TX–
TX+
10
9
8
7
6
5
3
2
1
18
17
P–B
(*1)
G
R
W
B
(*1)
G
R
R
G
8 IK2
6 IK2
5 IK2
4 IK2
3 IK2
7 IK2
12 IK2
13 IK2
14 IK2
10 IK2
9 IK2
P–B
(*1)
G
R
W
B
(*1)
G
R
R
G
1 B
2 B
3 B
4 B
5 B
6 B
8 B
9 B
10 B
13 B
14 B
R–MU
L1–
L1+
R1–
R1+
SLD2
NTS2
SGN2
SLDB
TX2+
TX2–
R 5(A), R 6(B), R 7(C), R 8(D), R 9(E)
Rear Seat Entertainment ECU

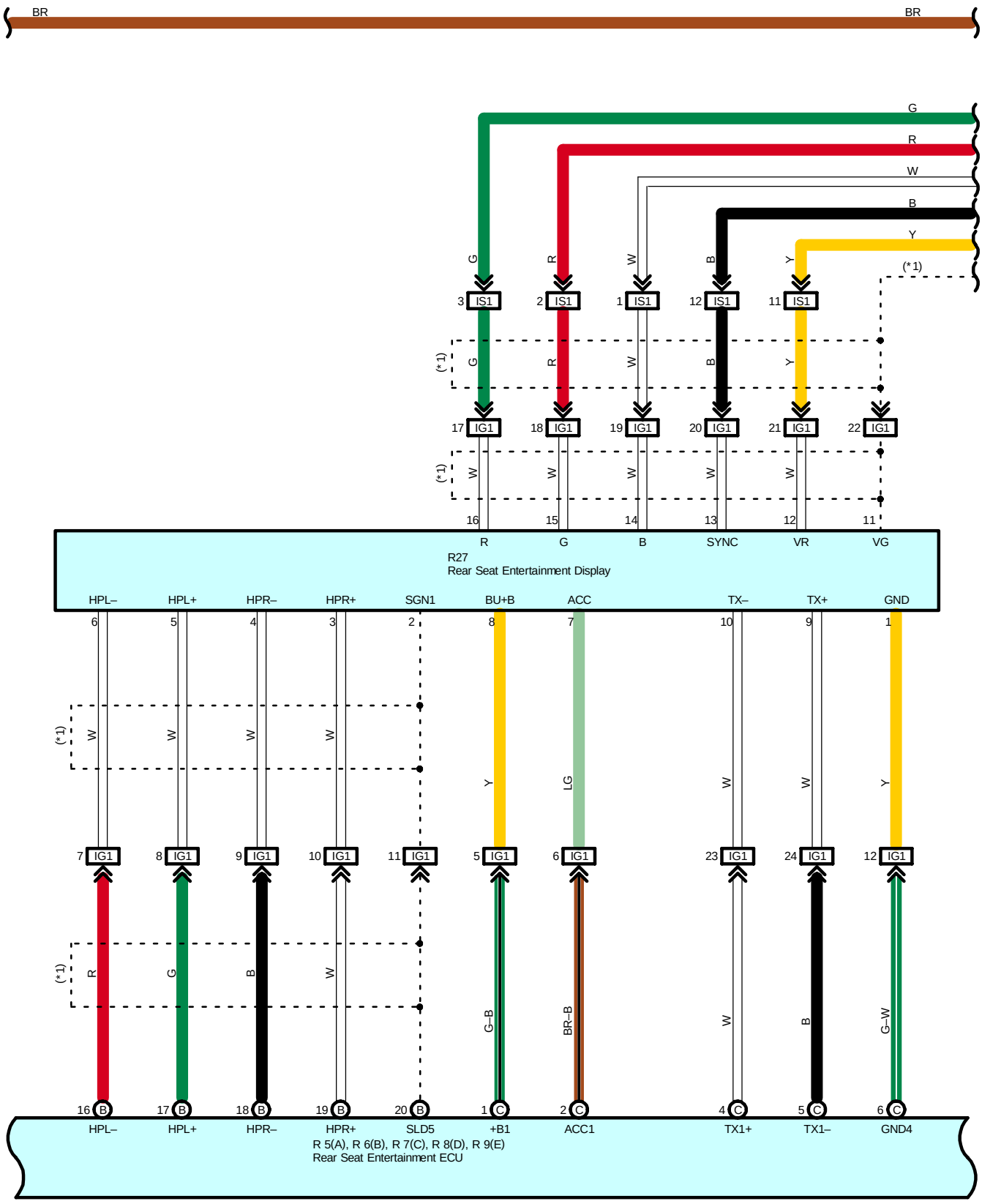
BR
BR
G
R
W
B
Y
(*1)
3 IS1
2 IS1
1 IS1
12 IS1
11 IS1
17 IG1
18 IG1
19 IG1
20 IG1
21 IG1
22 IG1
16 R
15 G
14 B
13 SYNC
12 VR
11 VG
R27
Rear Seat Entertainment Display
HPL–
HPL+
HPR–
HPR+
SGN1
BU+B
ACC
TX–
TX+
GND
6
5
4
3
2
8
7
10
9
1
7 IG1
8 IG1
9 IG1
10 IG1
11 IG1
5 IG1
6 IG1
23 IG1
24 IG1
12 IG1
16 B
17 B
18 B
19 B
20 B
1 C
2 C
4 C
5 C
6 C
HPL–
HPL+
HPR–
HPR+
SLD5
+B1
ACC1
TX1+
TX1–
GND4
R 5(A), R 6(B), R 7(C), R 8(D), R 9(E)
Rear Seat Entertainment ECU

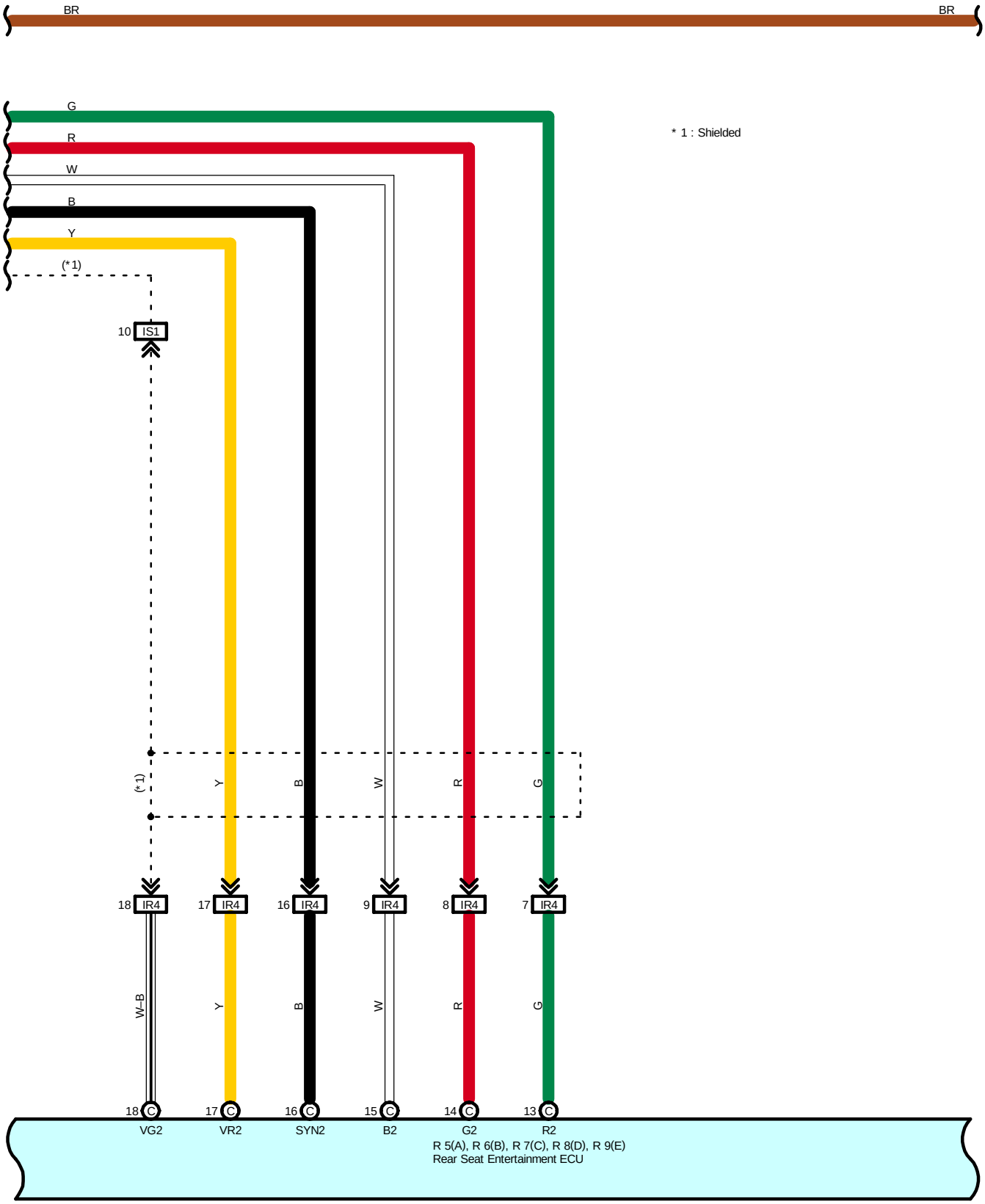
BR
BR
G
R
W
B
Y
(*1)
* 1 : Shielded
10 IS1
(*1)
Y
B
W
R
G
18 IR4
17 IR4
16 IR4
9 IR4
8 IR4
7 IR4
W–B
Y
B
W
R
G
18 C
17 C
16 C
15 C
14 C
13 C
VG2
VR2
SYN2
B2
G2
R2
R 5(A), R 6(B), R 7(C), R 8(D), R 9(E)
Rear Seat Entertainment ECU

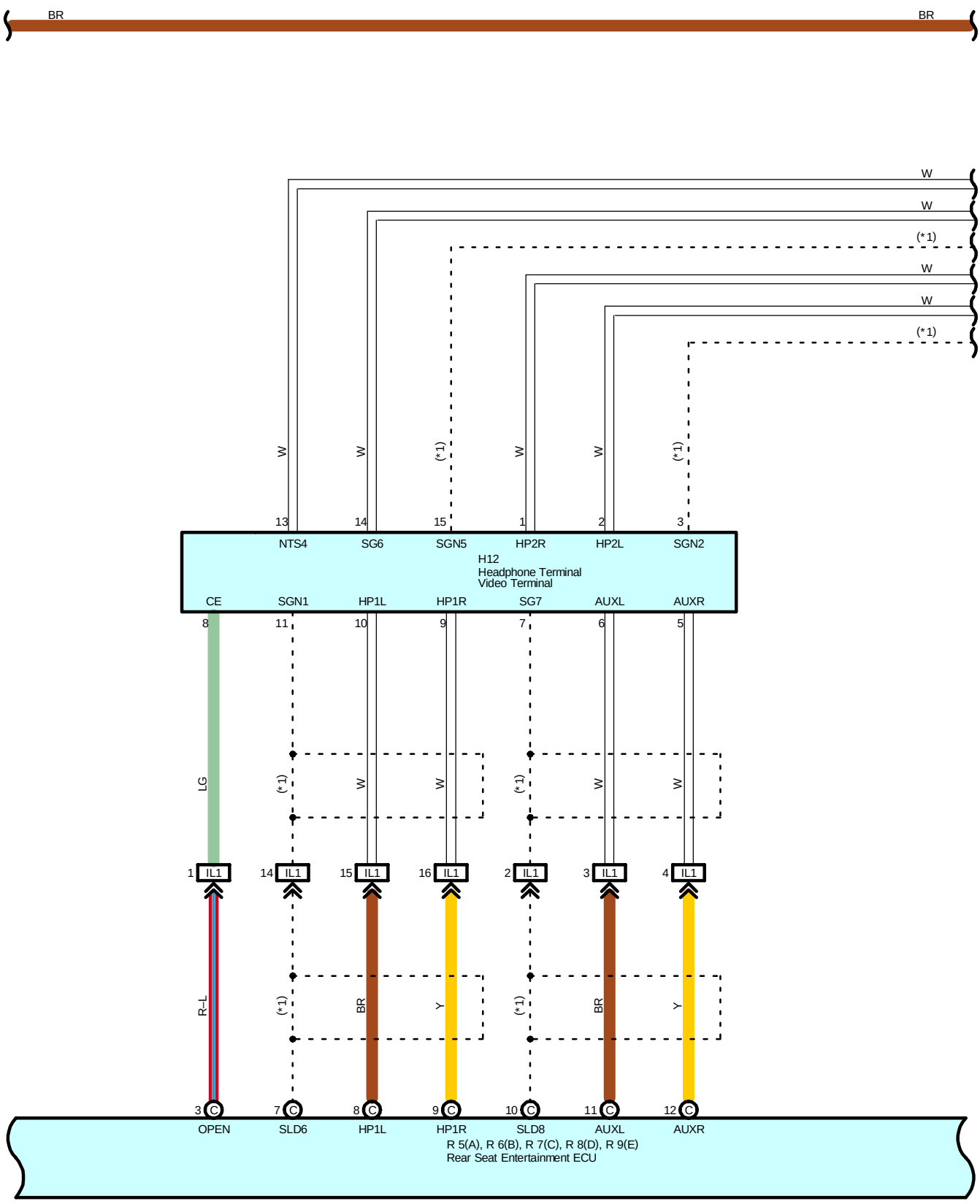
BR
BR
W
W
(*1)
W
W
(*1)
W
W
(*1)
W
W
(*1)
13
14
15
1
2
3
NTS4
SG6
SGN5
HP2R
HP2L
SGN2
H12
Headphone Terminal
Video Terminal
CE
SGN1
HP1L
HP1R
SG7
AUXL
AUXR
8
11
10
9
7
6
5
LG
(*1)
W
W
(*1)
W
W
1
IL1
14
IL1
15
IL1
16
IL1
2
IL1
3
IL1
4
IL1
R–L
(*1)
BR
Y
(*1)
BR
Y
3
C
7
C
8
C
9
C
10
C
11
C
12
C
OPEN
SLD6
HP1L
HP1R
SLD8
AUXL
AUXR
R 5(A), R 6(B), R 7(C), R 8(D), R 9(E)
Rear Seat Entertainment ECU

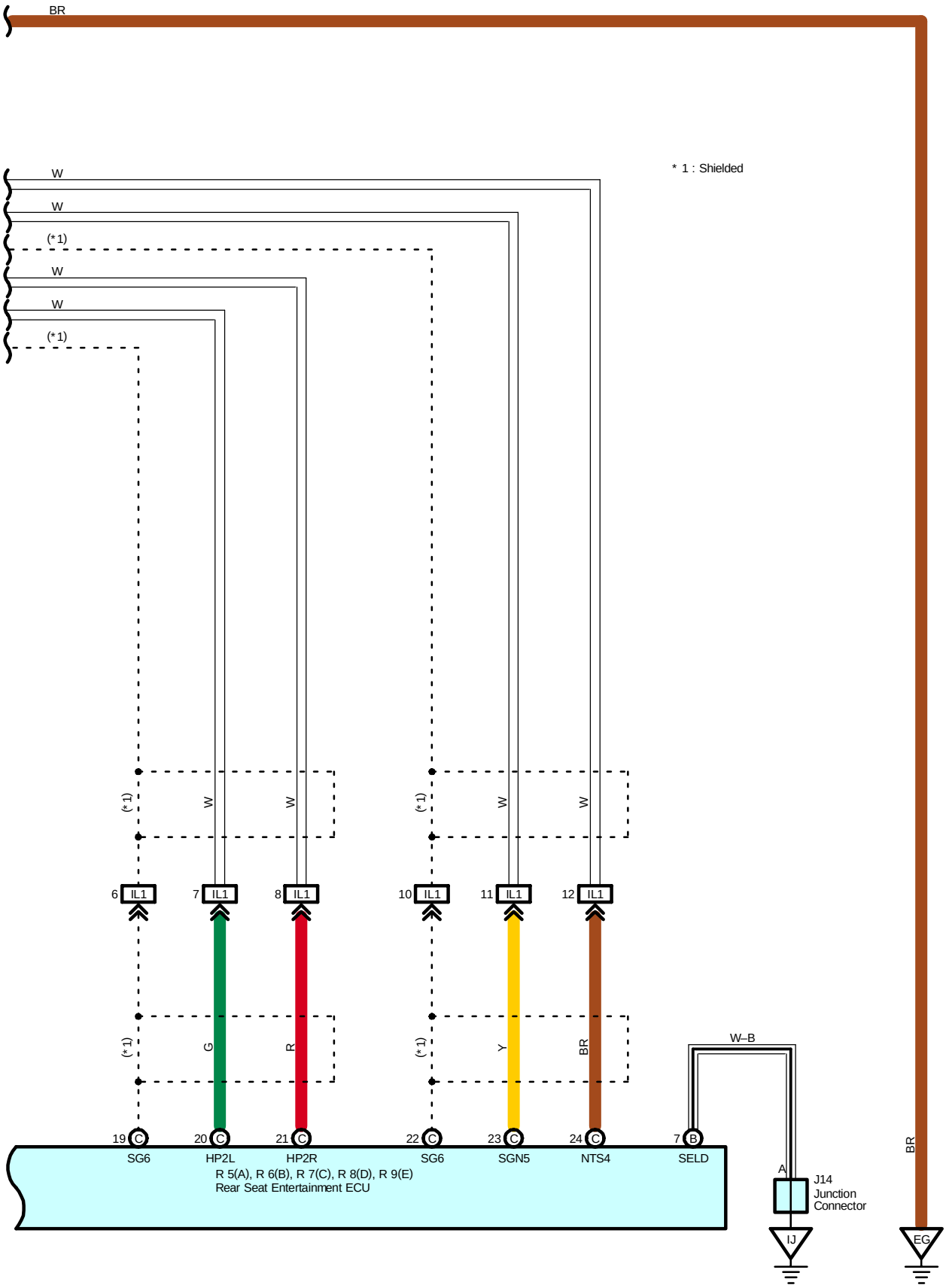
BR
* 1 : Shielded
W
W
(*1)
W
W
(*1)
(*1)
W
W
(*1)
W
W
6 IL1
7 IL1
8 IL1
10 IL1
11 IL1
12 IL1
(*1)
G
R
(*1)
Y
BR
W–B
19 C
20 C
21 C
22 C
23 C
24 C
7 B
SG6
HP2L
HP2R
SG6
SGN5
NTS4
SELD
R 5(A), R 6(B), R 7(C), R 8(D), R 9(E)
Rear Seat Entertainment ECU
A
J14
Junction
Connector
IJ
BR
EG

Service Hints

R5 (A), R6 (B), R9 (E) Rear Seat Entertainment ECU
(A)29, (B) 7, (E) 7–Ground : Always continuity
(A)16–Ground : Always approx. 12 volts
(A)32–Ground : Approx. 12 volts with the ignition SW at ACC or ON position

C3 CD Automatic Changer
21–Ground : Always continuity
17–Ground : Always approx. 12 volts
18–Ground : Approx. 12 volts with the ignition SW at ACC or ON position

R1 (A) Radio and Player
(A)20–Ground : Always continuity
(A) 1–Ground : Always approx. 12 volts
(A)11–Ground : Approx. 12 volts with the ignition SW at ACC or ON position

S15 (A), S16 (B) Stereo Component Amplifier
(B)12, (B) 13–Ground: Always continuity
(B) 7, (B) 16–Ground : Always approx. 12 volts
(A)20–Ground : Approx. 12 volts with the ignition SW at ACC or ON position

D6 DVD Player
16–Ground : Always continuity
20–Ground : Always approx. 12 volts
19–Ground : Approx. 12 volts with the ignition SW at ACC or ON position

: Parts Location

Code		See Page	Code		See Page	Code		See Page
A32		38	F14		43	R3	C	41
B8		42	H12		39	R5	A	41
B9		42	J12		40	R6	B	41
C3		38	J14		40	R7	C	41
C6		38	J19		40	R8	D	41
C9	A	38	J21		40	R9	E	41
C11	C	38	J23		40	R22		44
C13		38	M5	A	40	R23		44
D6		39	M6	B	40	R27		44
F9		43	M14	D	40	S15	A	41
F10		43	N4	A	40	S16	B	41
F11		43	N5	B	40	S37		37
F12		43	R1	A	41	T19	B	41
F13		43	R2	B	41	W6		45

: Relay Blocks

Code	See Page	Relay Blocks (Relay Block Location)
2	22	Engine Room R/B (Engine Compartment Left)

: Junction Block and Wire Harness Connector

Code	See Page	Junction Block and Wire Harness (Connector Location)
IG	27	Instrument Panel Wire and Driver Side J/B (Lower Finish Panel)
IK		
2A	32	Instrument Panel Wire and J/B No.2 (Instrument Panel Reinforcement Center)
3A	34	Instrument Panel Wire and J/B No.3 (Instrument Panel Reinforcement Right)
3B		

: **Connector Joining Wire Harness and Wire Harness**

Code	See Page	Joining Wire Harness and Wire Harness (Connector Location)
IB4	50	Instrument Panel Wire and Engine Room Main Wire (Left Kick Panel)
IC2	50	Front Door LH Wire and Instrument Panel Wire (Left Kick Panel)
IE1	52	Instrument Panel Wire and Instrument Panel Wire (Left Kick Panel)
IG1	52	Radio Installation Sub Wire and Instrument Panel Wire (Upper the Driver Side J/B)
IH1	52	Instrument Panel Wire and Instrument Panel Wire (Near the J/B No.1)
IJ1	52	Instrument Panel Wire and Instrument Panel No.2 Wire (Instrument Panel Brace LH)
IK2	52	Console Box Wire and Instrument Panel Wire (Under the Instrument Panel Brace LH)
IL1	52	Radio Installation Sub Wire and Instrument Panel Wire (Under the Instrument Panel Brace LH)
IN2	54	Instrument Panel Wire and Instrument Panel Wire (Under the Instrument Panel Brace RH)
IO1	54	Engine Wire and Instrument Panel Wire (Right Side of the Blower Unit)
IP3	54	Instrument Panel Wire and Engine Room Main Wire (Right Kick Panel)
IP5		
IQ1	56	Front Door RH Wire and Instrument Panel Wire (Right Kick Panel)
IR2	56	Instrument Panel Wire and Floor Wire (Right Kick Panel)
IR3		
IR4		
IS1	56	Instrument Panel Wire and Floor Wire (Under the Front Passenger's Seat)
BC1	58	Rear Door LH Wire and Instrument Panel Wire (Center Pillar LH)
BD1	58	Rear Door RH Wire and Instrument Panel Wire (Center Pillar RH)
BH2	60	Back Door No.1 Wire and Floor Wire (Right Quarter Panel Inner)

: **Ground Points**

Code	See Page	Ground Points Location
EG	48	Rear Bank of Left Cylinder Head
IJ	50	Near the Right Side of Steering Column
IK	50	Instrument Panel Brace LH
IL	50	Right Kick Panel

: **Splice Points**

Code	See Page	Wire Harness with Splice Points	Code	See Page	Wire Harness with Splice Points
I6	52	Instrument Panel Wire	I13	52	Floor Wire
I8			I14		
I12			I15		

Audio System without RSES

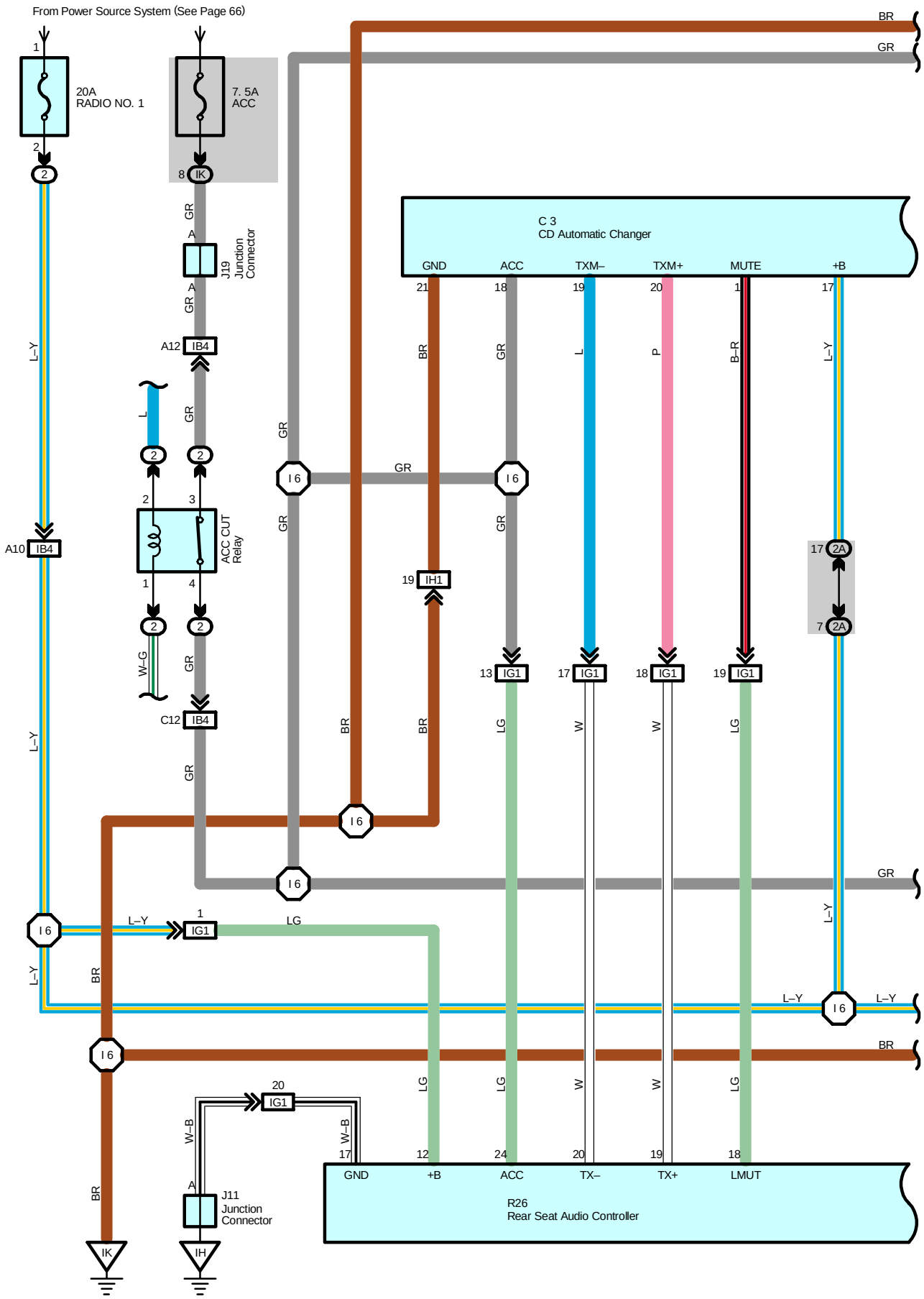

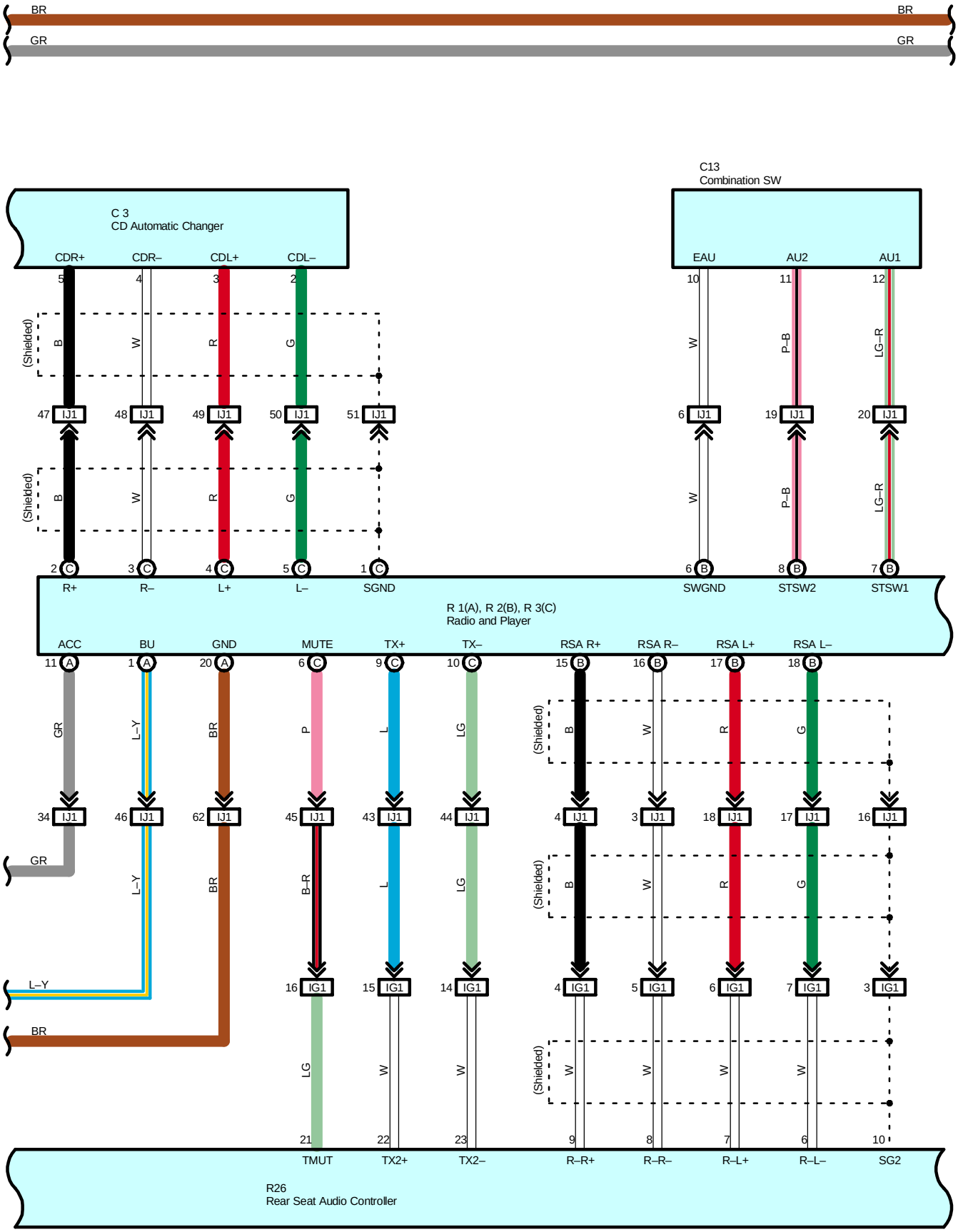
BR
GR
C 3
CD Automatic Changer
CDR+
CDR–
CDL+
CDL–
C13
Combination SW
EAU
AU2
AU1
(Shielded)
IJ1
R+
R–
L+
L–
SGND
SWGND
STSW2
STSW1
R 1(A), R 2(B), R 3(C)
Radio and Player
ACC
BU
GND
MUTE
TX+
TX–
RSA R+
RSA R–
RSA L+
RSA L–
IG1
TMUT
TX2+
TX2–
R–R+
R–R–
R–L+
R–L–
SG2
R26
Rear Seat Audio Controller

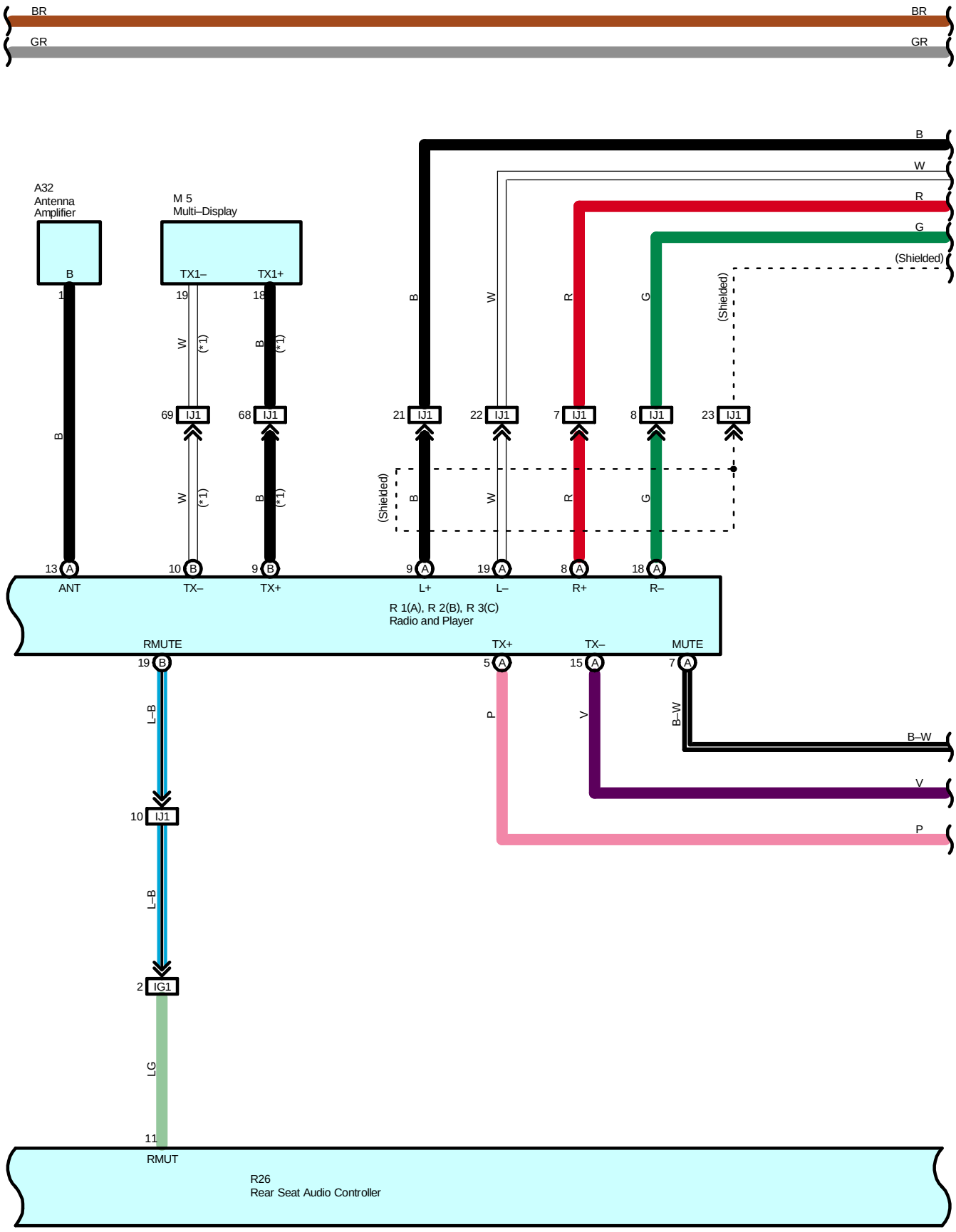
BR
GR
A32
Antenna
Amplifier
M 5
Multi–Display
TX1–
TX1+
(*1)
IJ1
IG1
(Shielded)
ANT
TX–
TX+
L+
L–
R+
R–
R 1(A), R 2(B), R 3(C)
Radio and Player
RMUTE
MUTE
B–W
RMUT
R26
Rear Seat Audio Controller

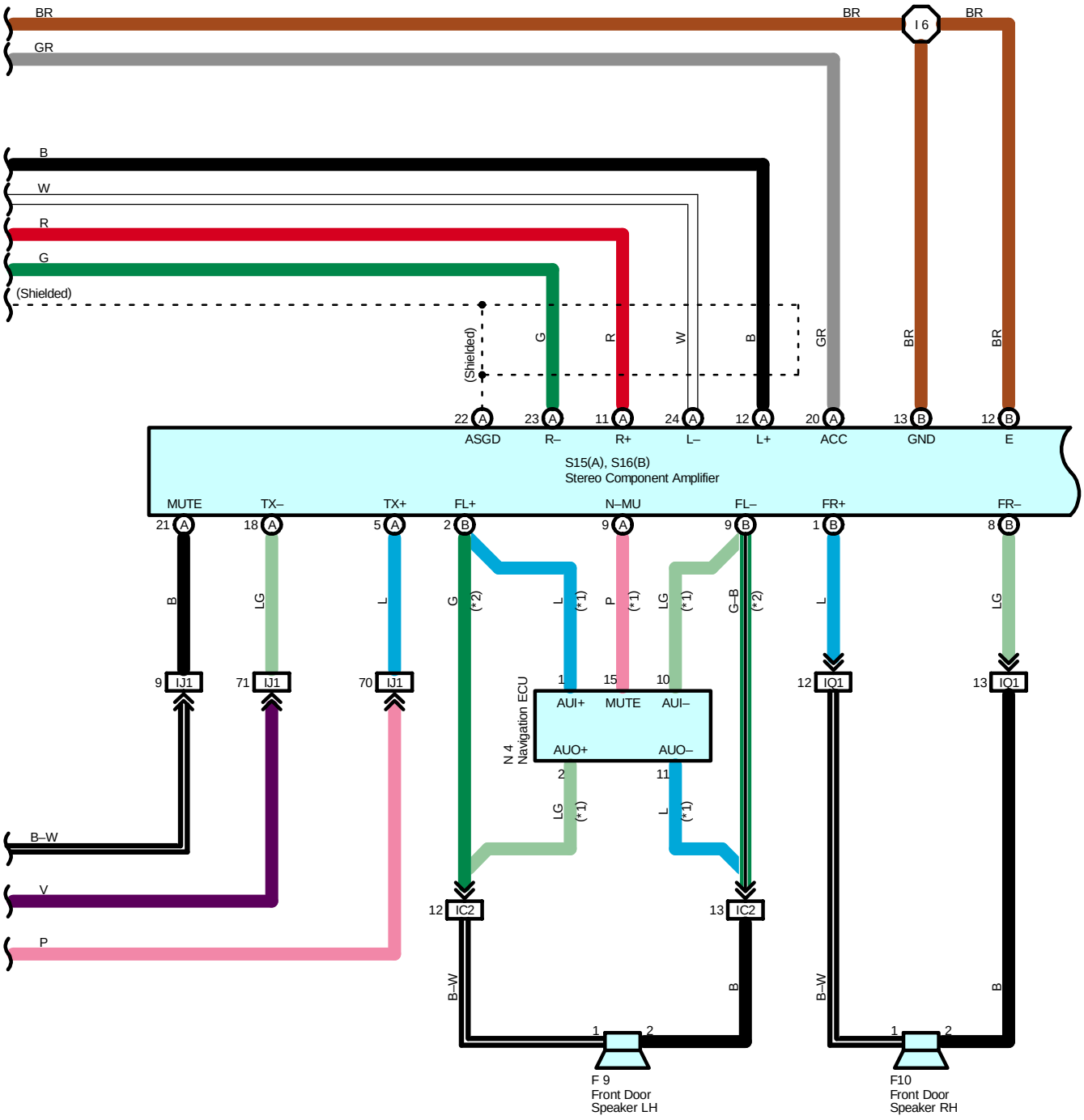
BR
GR
I 6
B
W
R
G
(Shielded)
22 A ASGD
23 A R–
11 A R+
24 A L–
12 A L+
20 A ACC
13 B GND
12 B E
S15(A), S16(B)
Stereo Component Amplifier
MUTE
TX–
TX+
FL+
N–MU
FL–
FR+
FR–
21 A
18 A
5 A
2 B
9 A
9 B
1 B
8 B
9 IJ1
71 IJ1
70 IJ1
12 IQ1
13 IQ1
N 4
Navigation ECU
AUI+
MUTE
AUI–
AUO+
AUO–
B–W
V
P
12 IC2
13 IC2
F 9
Front Door
Speaker LH
F10
Front Door
Speaker RH
* 1 : w/ LEXUS Navigation System
* 2 : w/o LEXUS Navigation System

R26
Rear Seat Audio Controller

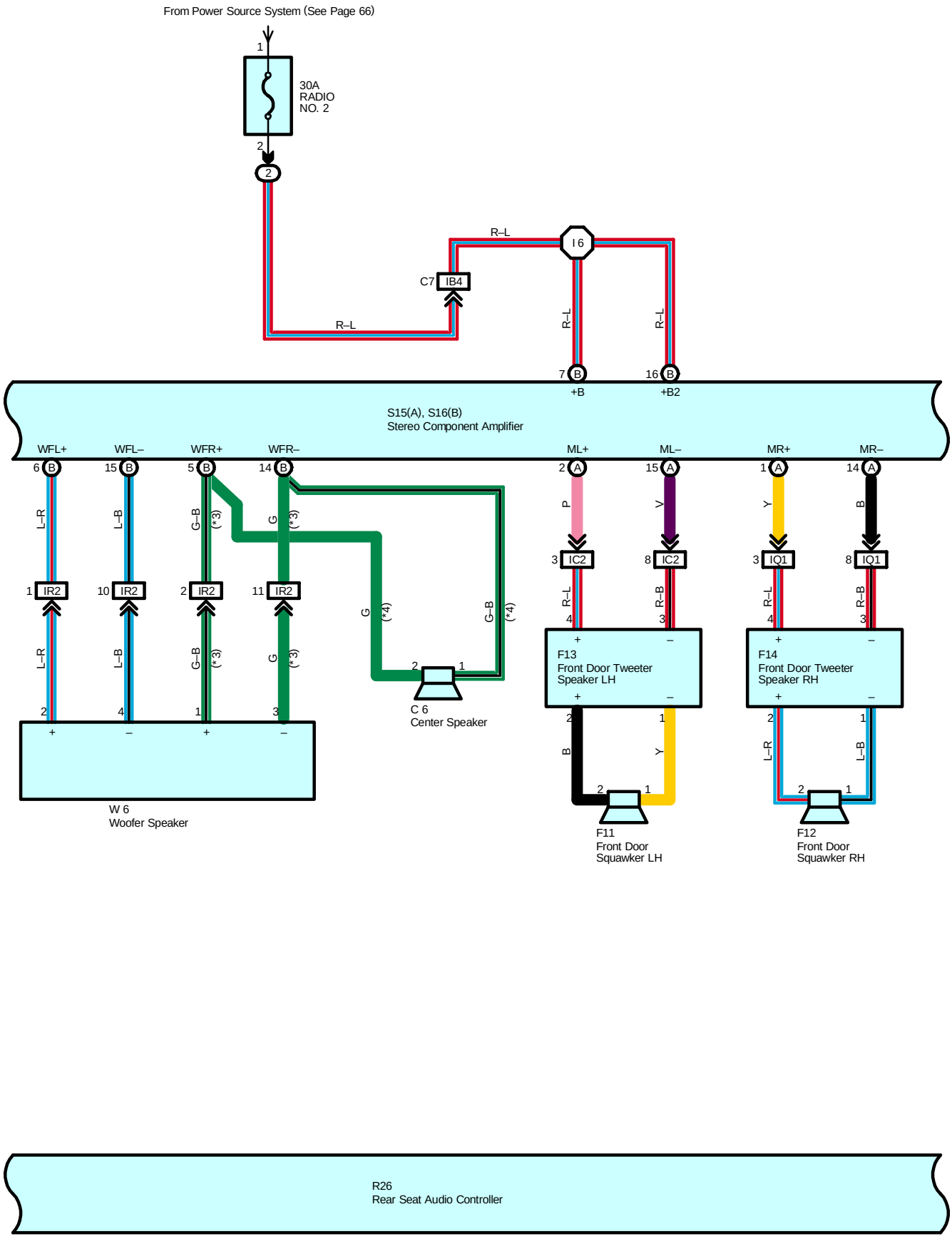
From Power Source System (See Page 66)
30A
RADIO
NO. 2
R–L
I 6
C7
IB4
R–L
R–L
R–L
+B
+B2
S15(A), S16(B)
Stereo Component Amplifier
WFL+
WFL–
WFR+
WFR–
ML+
ML–
MR+
MR–
L–R
L–B
G–B
G
P
V
Y
B
IR2
IC2
IQ1
R–L
R–B
(*3)
(*4)
F13
Front Door Tweeter
Speaker LH
F14
Front Door Tweeter
Speaker RH
C 6
Center Speaker
W 6
Woofer Speaker
F11
Front Door
Squawker LH
F12
Front Door
Squawker RH

R26
Rear Seat Audio Controller

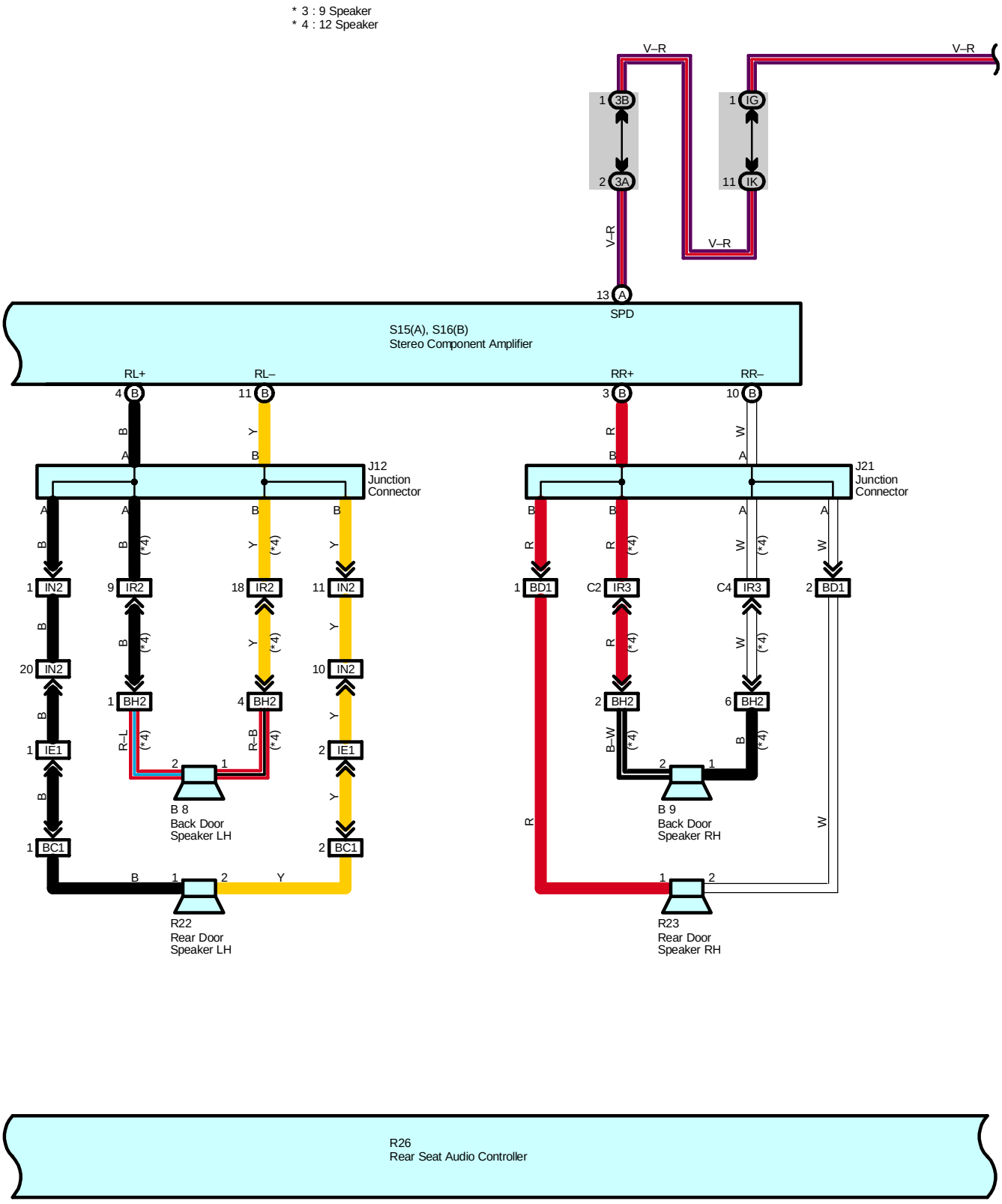
* 3 : 9 Speaker
* 4 : 12 Speaker
V–R
V–R
1 3B
2 3A
1 IG
11 IK
V–R
V–R
13 A
SPD
S15(A), S16(B)
Stereo Component Amplifier
RL+
RL–
RR+
RR–
4 B
11 B
3 B
10 B
J12
Junction
Connector
J21
Junction
Connector
1 IN2
9 IR2
18 IR2
11 IN2
20 IN2
10 IN2
1 BH2
4 BH2
1 IE1
2 IE1
1 BC1
2 BC1
1 BD1
C2 IR3
C4 IR3
2 BD1
2 BH2
6 BH2
B 8
Back Door
Speaker LH
B 9
Back Door
Speaker RH
R22
Rear Door
Speaker LH
R23
Rear Door
Speaker RH
R26
Rear Seat Audio Controller

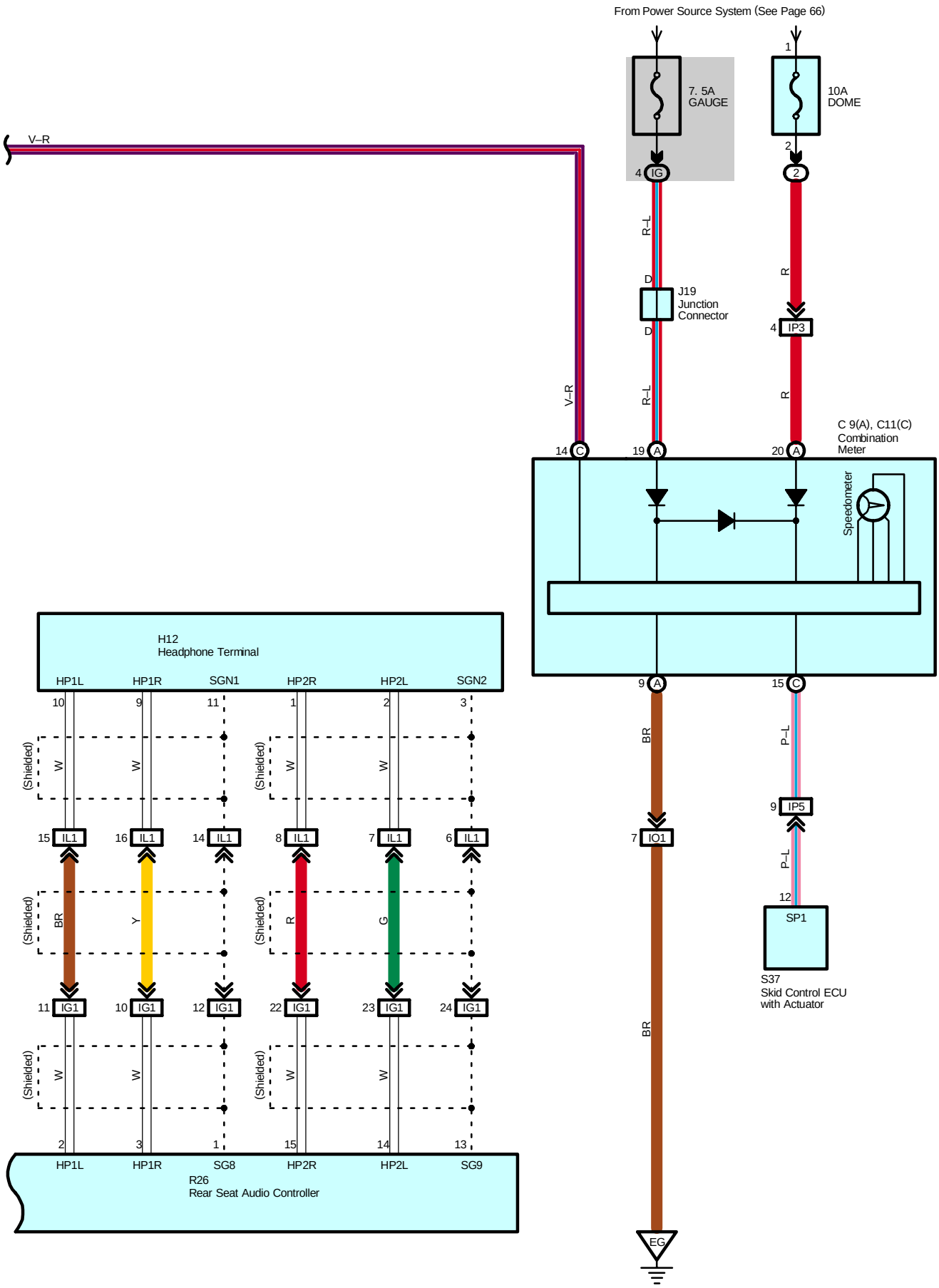
From Power Source System (See Page 66)
7. 5A
GAUGE
10A
DOME
V–R
4 IG
1
2
2
R–L
R
D
J19
Junction
Connector
D
4 IP3
V–R
R–L
R
C 9(A), C11(C)
Combination
Meter
14 C
19 A
20 A
Speedometer
H12
Headphone Terminal
HP1L
HP1R
SGN1
HP2R
HP2L
SGN2
10
9
11
1
2
3
(Shielded)
W
W
W
W
15 IL1
16 IL1
14 IL1
8 IL1
7 IL1
6 IL1
BR
Y
R
G
11 IG1
10 IG1
12 IG1
22 IG1
23 IG1
24 IG1
2
3
1
15
14
13
HP1L
HP1R
SG8
HP2R
HP2L
SG9
R26
Rear Seat Audio Controller
9 A
15 C
BR
P–L
9 IP5
7 IO1
P–L
12
SP1
S37
Skid Control ECU
with Actuator
BR
EG

Service Hints

R26 Rear Seat Audio Controller

17–Ground : Always continuity
12–Ground : Always approx. 12 volts
24–Ground : Approx. 12 volts with the ignition SW at ACC or ON position

C3 CD Automatic Changer

21–Ground : Always continuity
17–Ground : Always approx. 12 volts
18–Ground : Approx. 12 volts with the ignition SW at ACC or ON position

R1 (A) Radio and Player

(A)20–Ground : Always continuity
(A) 1–Ground : Always approx. 12 volts
(A)11–Ground : Approx. 12 volts with the ignition SW at ACC or ON position

S15 (A), S16 (B) Stereo Component Amplifier

(B)12, (B) 13–Ground: Always continuity
(B) 7, (B) 16–Ground : Always approx. 12 volts
(A)20–Ground : Approx. 12 volts with the ignition SW at ACC or ON position

: Parts Location

Code		See Page	Code		See Page	Code		See Page
A32		38	F12		43	R2	B	41
B8		42	F13		43	R3	C	41
B9		42	F14		43	R22		44
C3		38	H12		39	R23		44
C6		38	J11		40	R26		44
C9	A	38	J12		40	S15	A	41
C11	C	38	J19		40	S16	B	41
C13		38	J21		40	S37		37
F9		43	M5		40	W6		45
F10		43	N4		40			
F11		43	R1	A	41			

: Relay Blocks

Code	See Page	Relay Blocks (Relay Block Location)
2	22	Engine Room R/B (Engine Compartment Left)

: Junction Block and Wire Harness Connector

Code	See Page	Junction Block and Wire Harness (Connector Location)
IG	27	Instrument Panel Wire and Driver Side J/B (Lower Finish Panel)
IK		
2A	32	Instrument Panel Wire and J/B No.2 (Instrument Panel Reinforcement Center)
3A	34	Instrument Panel Wire and J/B No.3 (Instrument Panel Reinforcement Right)
3B		

: Connector Joining Wire Harness and Wire Harness

Code	See Page	Joining Wire Harness and Wire Harness (Connector Location)
IB4	50	Instrument Panel Wire and Engine Room Main Wire (Left Kick Panel)
IC2	50	Front Door LH Wire and Instrument Panel Wire (Left Kick Panel)
IE1	52	Instrument Panel Wire and Instrument Panel Wire (Left Kick Panel)
IG1	52	Radio Installation Sub Wire and Instrument Panel Wire (Upper the Driver Side J/B)
IH1	52	Instrument Panel Wire and Instrument Panel Wire (Near the J/B No.1)
IJ1	52	Instrument Panel Wire and Instrument Panel No.2 Wire (Instrument Panel Brace LH)
IL1	52	Radio Installation Sub Wire and Instrument Panel Wire (Under the Instrument Panel Brace LH)
IN2	54	Instrument Panel Wire and Instrument Panel Wire (Under the Instrument Panel Brace RH)
IO1	54	Engine Wire and Instrument Panel Wire (Right Side of the Blower Unit)
IP3	54	Instrument Panel Wire and Engine Room Main Wire (Right Kick Panel)
IP5		
IQ1	56	Front Door RH Wire and Instrument Panel Wire (Right Kick Panel)
IR2	56	Instrument Panel Wire and Floor Wire (Right Kick Panel)
IR3		
BC1	58	Rear Door LH Wire and Instrument Panel Wire (Center Pillar LH)
BD1	58	Rear Door RH Wire and Instrument Panel Wire (Center Pillar RH)
BH2	60	Back Door No.1 Wire and Floor Wire (Right Quarter Panel Inner)

: Ground Points

Code	See Page	Ground Points Location
EG	48	Rear Bank of Left Cylinder Head
IH	50	Left Kick Panel
IK	50	Instrument Panel Brace LH

: Splice Points

Code	See Page	Wire Harness with Splice Points	Code	See Page	Wire Harness with Splice Points
I6	52	Instrument Panel Wire			

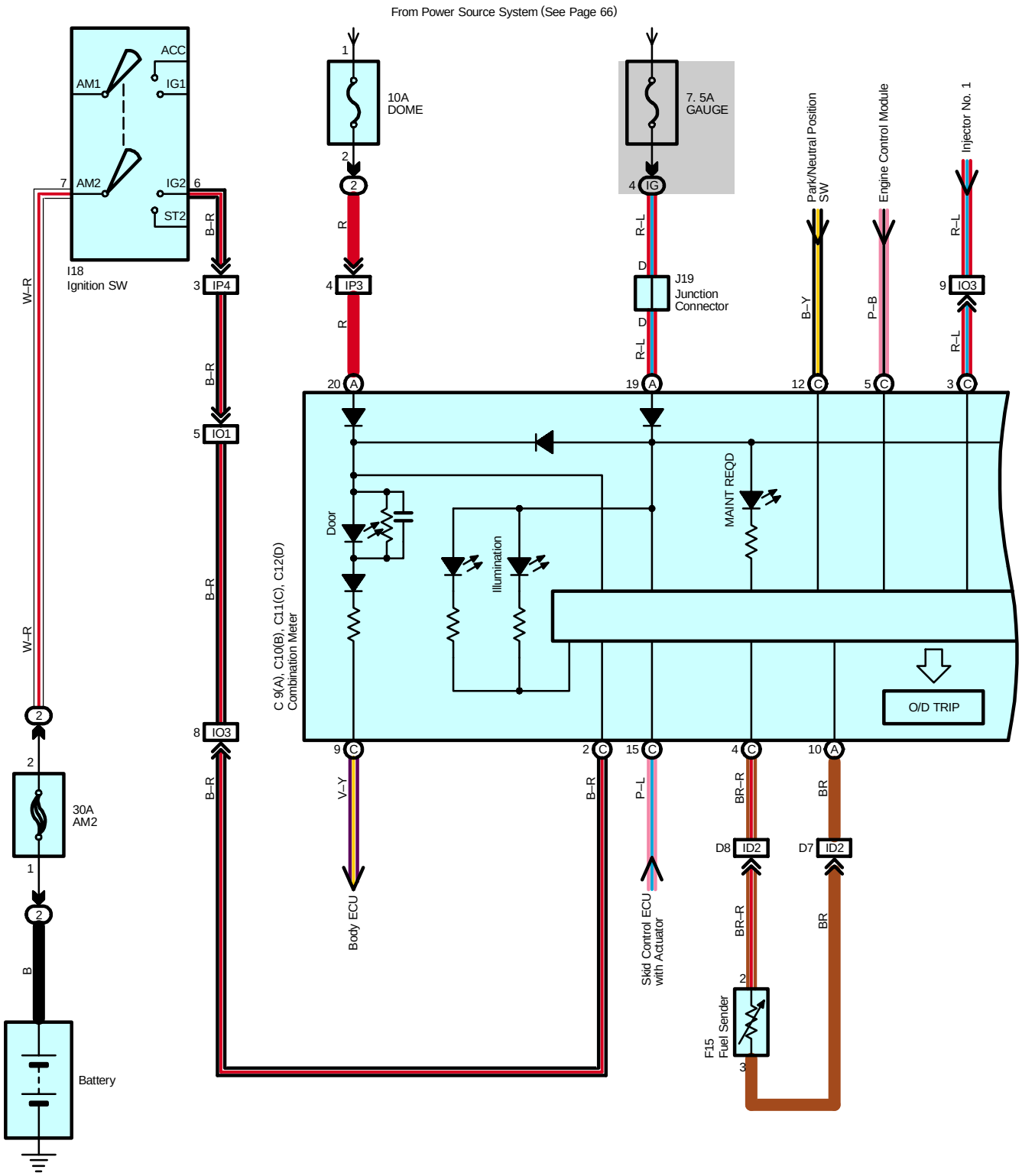
From Power Source System (See Page 66)
ACC
AM1
IG1
AM2
IG2
ST2
I18
Ignition SW
10A
DOME
7. 5A
GAUGE
IG
J19
Junction
Connector
Park/Neutral Position
SW
Engine Control Module
Injector No. 1
IP4
IP3
IO1
IO3
ID2
D8
D7
F15
Fuel Sender
C 9(A), C10(B), C11(C), C12(D)
Combination Meter
Door
Illumination
MAINT REQD
O/D TRIP
Body ECU
Skid Control ECU
with Actuator
30A
AM2
Battery
W–R
B–R
R
R–L
B–Y
P–B
V–Y
P–L
BR–R
BR
B

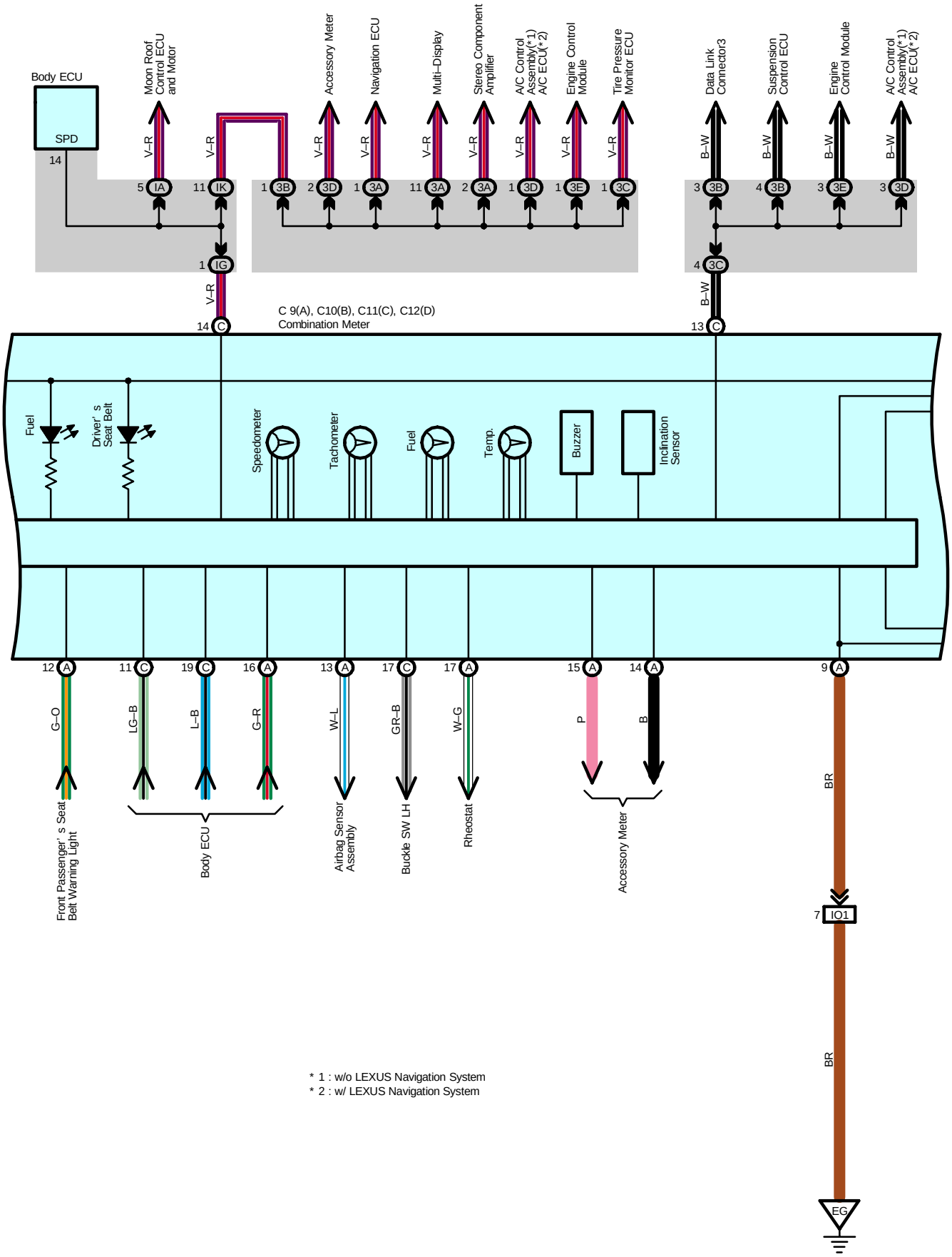
Body ECU
SPD
14
Moon Roof Control ECU and Motor
Accessory Meter
Navigation ECU
Multi-Display
Stereo Component Amplifier
A/C Control Assembly(*1) A/C ECU(*2)
Engine Control Module
Tire Pressure Monitor ECU
Data Link Connector3
Suspension Control ECU
Engine Control Module
A/C Control Assembly(*1) A/C ECU(*2)
V-R
B-W
5 IA
11 IK
1 3B
2 3D
1 3A
11 3A
2 3A
1 3D
1 3E
1 3C
3 3B
4 3B
3 3E
3 3D
1 IG
4 3C
14 C
13 C
C 9(A), C10(B), C11(C), C12(D)
Combination Meter
Fuel
Driver' s Seat Belt
Speedometer
Tachometer
Fuel
Temp.
Buzzer
Inclination Sensor
12 A
11 C
19 C
16 A
13 A
17 C
17 A
15 A
14 A
9 A
G-O
LG-B
L-B
G-R
W-L
GR-B
W-G
P
B
BR
Front Passenger' s Seat Belt Warning Light
Body ECU
Airbag Sensor Assembly
Buckle SW LH
Rheostat
Accessory Meter
7 IO1
BR
EG
* 1 : w/o LEXUS Navigation System
* 2 : w/ LEXUS Navigation System

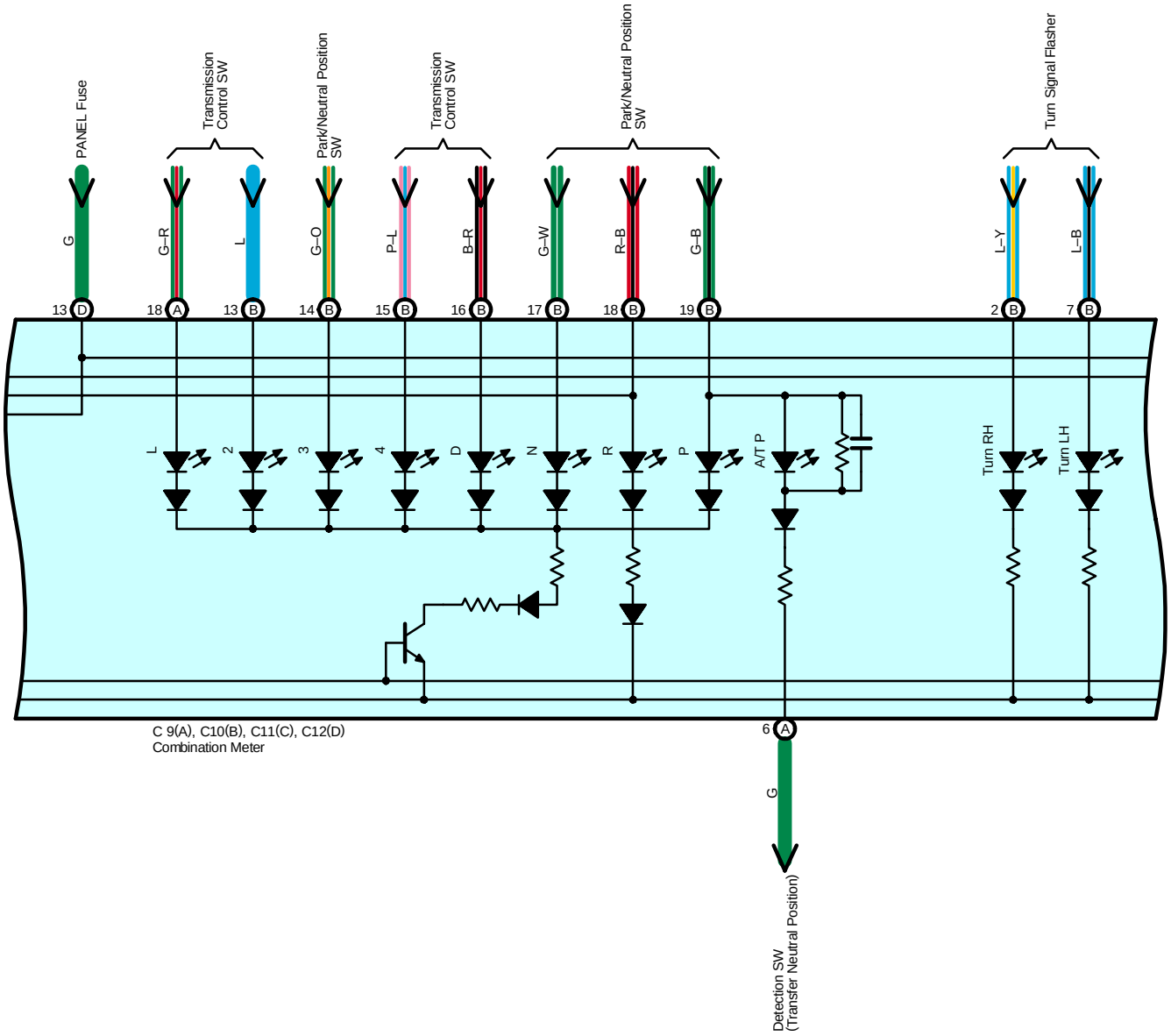
PANEL Fuse
Transmission Control SW
Park/Neutral Position SW
Transmission Control SW
Park/Neutral Position SW
Turn Signal Flasher
G
G–R
L
G–O
P–L
B–R
G–W
R–B
G–B
L–Y
L–B
13 D
18 A
13 B
14 B
15 B
16 B
17 B
18 B
19 B
2 B
7 B
L
2
3
4
D
N
R
P
A/T P
Turn RH
Turn LH
C 9(A), C10(B), C11(C), C12(D)
Combination Meter
6 A
G
Detection SW
(Transfer Neutral Position)

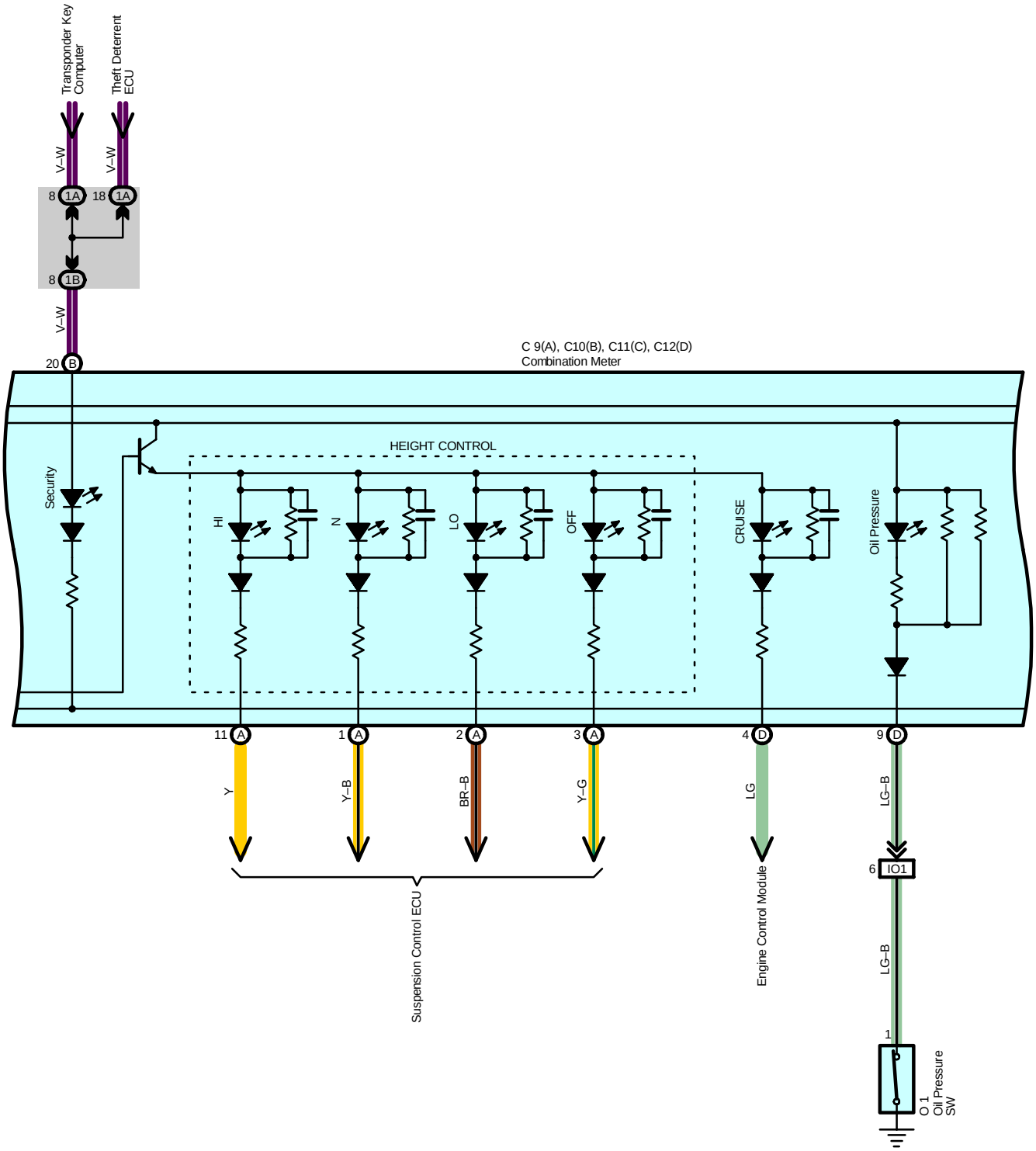
Transponder Key Computer
Theft Deterrent ECU
V–W
V–W
8 1A
18 1A
8 1B
V–W
20 B
C 9(A), C10(B), C11(C), C12(D)
Combination Meter
HEIGHT CONTROL
Security
HI
N
LO
OFF
CRUISE
Oil Pressure
11 A
1 A
2 A
3 A
4 D
9 D
Y
Y–B
BR–B
Y–G
LG
LG–B
6 IO1
LG–B
1
O 1
Oil Pressure SW
Suspension Control ECU
Engine Control Module

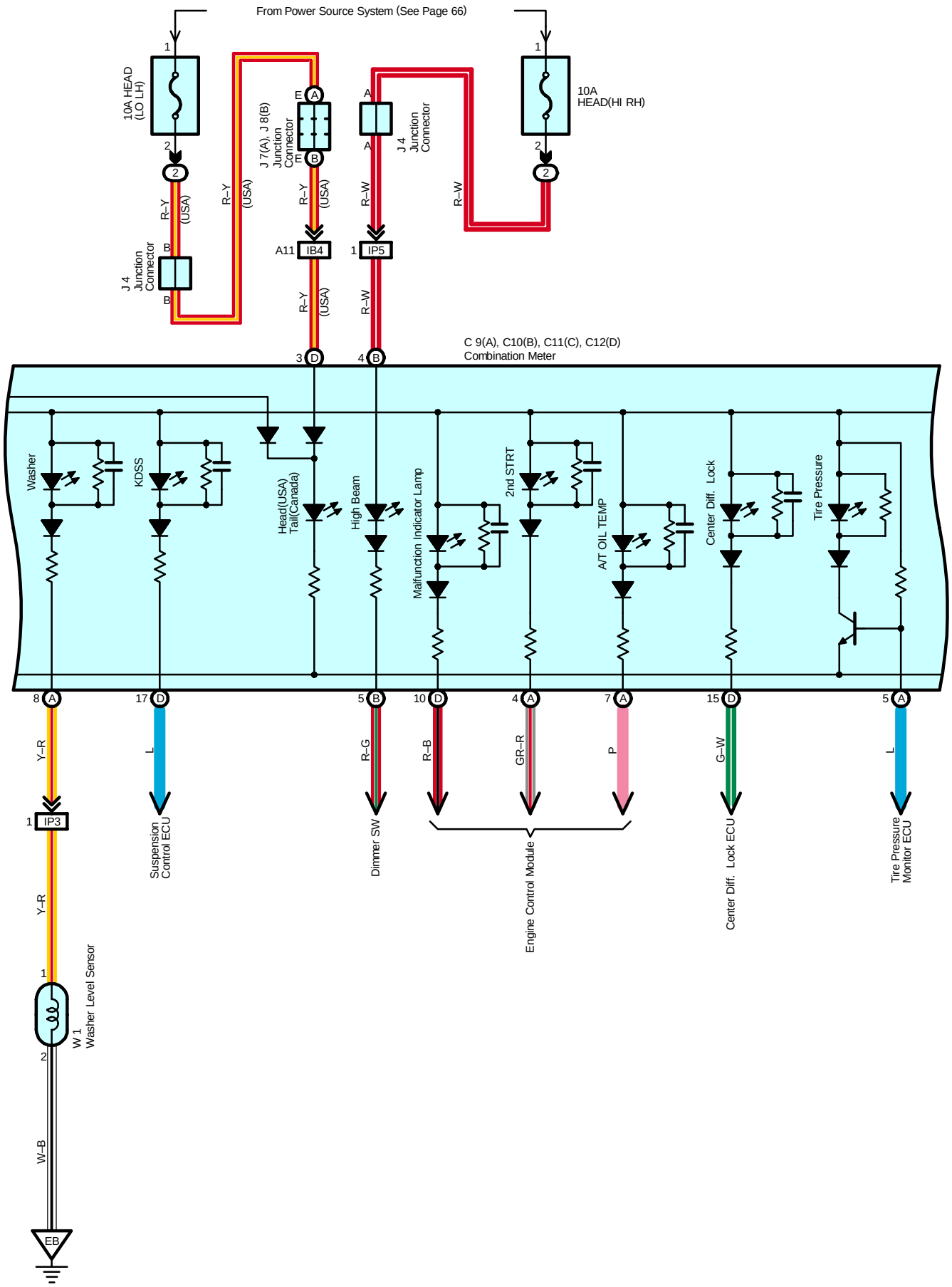
From Power Source System (See Page 66)
10A HEAD (LO LH)
10A HEAD(HI RH)
J 7(A), J 8(B) Junction Connector
J 4 Junction Connector
J 4 Junction Connector
R–Y (USA)
R–W
A11 IB4
1 IP5
C 9(A), C10(B), C11(C), C12(D) Combination Meter
Washer
KDSS
Head(USA) Tail(Canada)
High Beam
Malfunction Indicator Lamp
2nd STRT
A/T OIL TEMP
Center Diff. Lock
Tire Pressure
Y–R
L
R–G
R–B
GR–R
P
G–W
1 IP3
Suspension Control ECU
Dimmer SW
Engine Control Module
Center Diff. Lock ECU
Tire Pressure Monitor ECU
W 1 Washer Level Sensor
W–B
EB

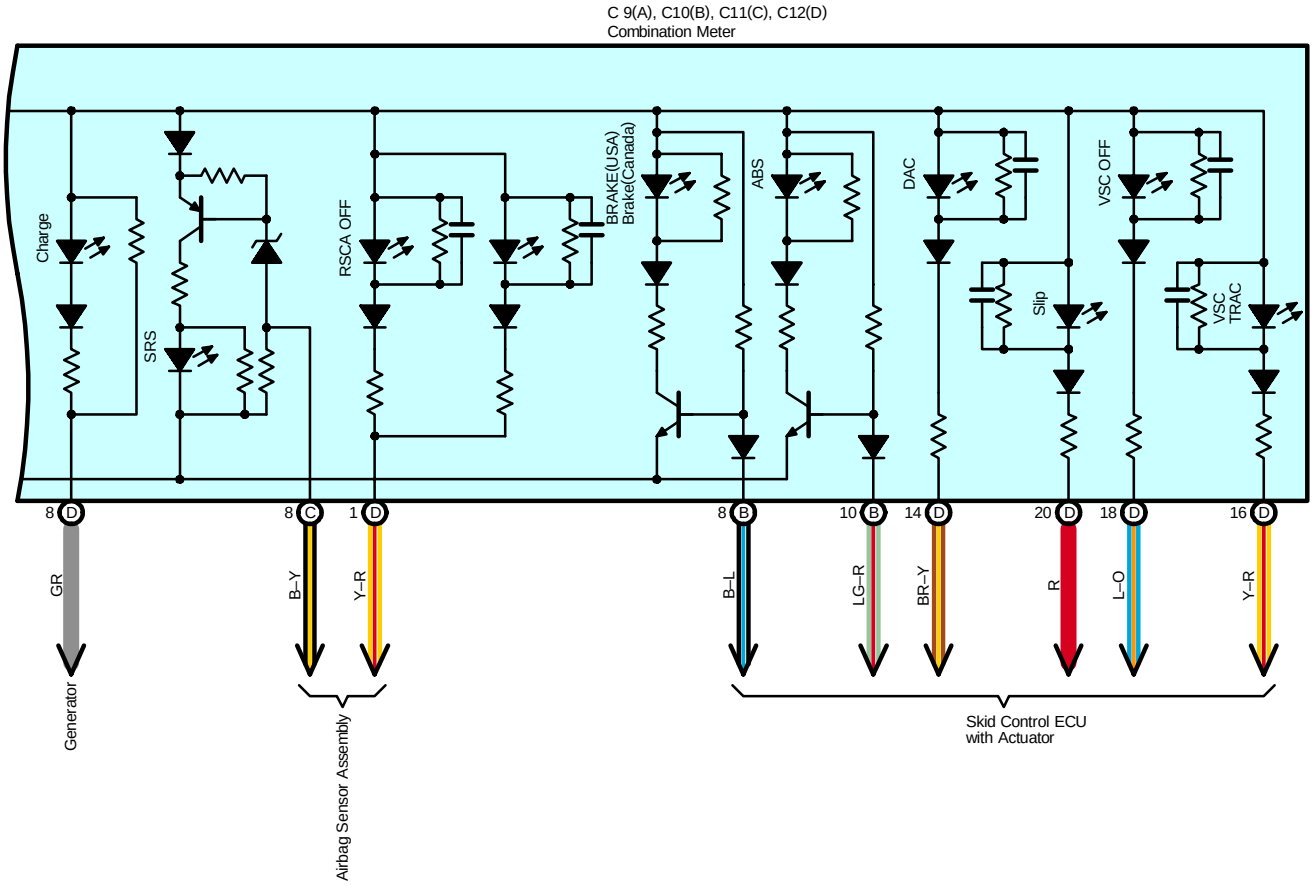
C 9(A), C10(B), C11(C), C12(D)
Combination Meter
Charge
SRS
RSCA OFF
BRAKE(USA)
Brake(Canada)
ABS
DAC
Slip
VSC OFF
VSC
TRAC
8 D
8 C
1 D
8 B
10 B
14 D
20 D
18 D
16 D
GR
B–Y
Y–R
B–L
LG–R
BR–Y
R
L–O
Y–R
Generator
Airbag Sensor Assembly
Skid Control ECU
with Actuator

Combination Meter

Service Hints

C9 (A), C12 (D) Combination Meter
(A)19–Ground : Approx. 12 volts with the ignition SW at ON position
(A) 9–Ground : Always continuity
(A)20–Ground : Always approx. 12 volts

: Parts Location

Code		See Page	Code		See Page	Code		See Page
C9	A	38	F15		43	J8	B	40
C10	B	38	I18		39	J19		40
C11	C	38	J4		37	O1		37
C12	D	38	J7	A	40	W1		37

: Relay Blocks

Code	See Page	Relay Blocks (Relay Block Location)
2	22	Engine Room R/B (Engine Compartment Left)

: Junction Block and Wire Harness Connector

Code	See Page	Junction Block and Wire Harness (Connector Location)
IA	26	Roof Wire and Driver Side J/B (Lower Finish Panel)
IG	27	Instrument Panel Wire and Driver Side J/B (Lower Finish Panel)
IK		
1A	30	Instrument Panel Wire and J/B No.1 (Instrument Panel Reinforcement Left)
1B		
3A	34	Instrument Panel Wire and J/B No.3 (Instrument Panel Reinforcement Right)
3B		
3C		
3D		
3E		

: Connector Joining Wire Harness and Wire Harness

Code	See Page	Joining Wire Harness and Wire Harness (Connector Location)
IB4	50	Instrument Panel Wire and Engine Room Main Wire (Left Kick Panel)
ID2	50	Instrument Panel Wire and Floor No.2 Wire (Left Kick Panel)
IO1	54	Engine Wire and Instrument Panel Wire (Right Side of the Blower Unit)
IO3		
IP3	54	Instrument Panel Wire and Engine Room Main Wire (Right Kick Panel)
IP4		
IP5		

: Ground Points

Code	See Page	Ground Points Location
EB	48	Front Left Fender
EG	48	Rear Bank of Left Cylinder Head

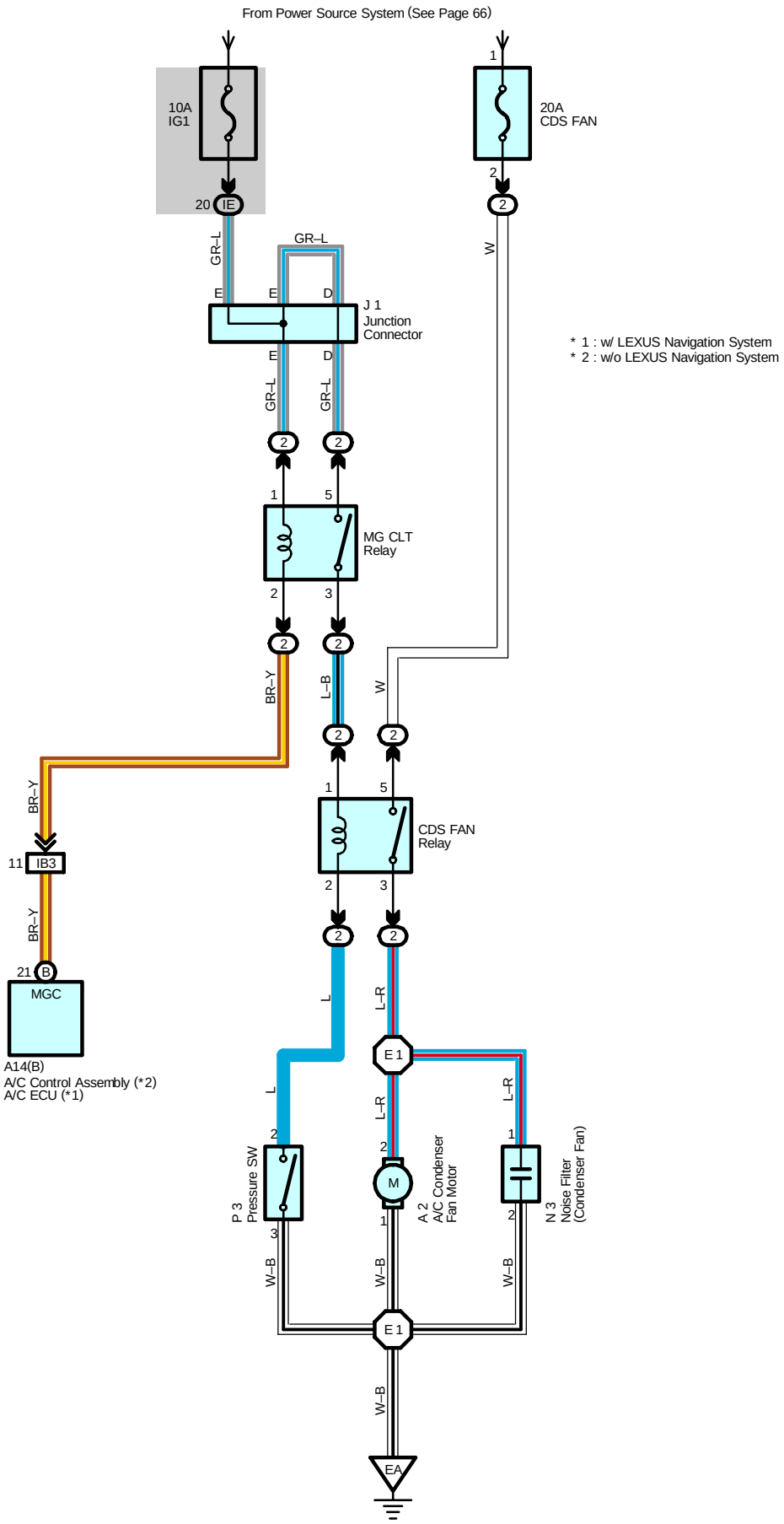
From Power Source System (See Page 66)
10A
IG1
20
IE
20A
CDS FAN
1
2
GR–L
GR–L
W
E
E
D
J 1
Junction
Connector
* 1 : w/ LEXUS Navigation System
* 2 : w/o LEXUS Navigation System
MG CLT
Relay
BR–Y
L–B
W
CDS FAN
Relay
BR–Y
11
IB3
BR–Y
21
B
MGC
A14(B)
A/C Control Assembly (*2)
A/C ECU (*1)
L
L–R
E 1
P 3
Pressure SW
A 2
A/C Condenser
Fan Motor
N 3
Noise Filter
(Condenser Fan)
W–B
EA

Service Hints

P3 Pressure SW

3–2 : Close above approx. 15.5 kgf/cm^2 (224 psi, 1520 kpa)
Open below approx. 12.5 kgf/cm^2 (181 psi, 1225 kpa)

: Parts Location

Code		See Page	Code	See Page	Code	See Page
A2		36	J1	37	P3	37
A14	B	38	N3	37		

: Relay Blocks

Code	See Page	Relay Blocks (Relay Block Location)
2	22	Engine Room R/B (Engine Compartment Left)

: Junction Block and Wire Harness Connector

Code	See Page	Junction Block and Wire Harness (Connector Location)
IE	26	Engine Room Main Wire and Driver Side J/B (Lower Finish Panel)

: Connector Joining Wire Harness and Wire Harness

Code	See Page	Joining Wire Harness and Wire Harness (Connector Location)
IB3	50	Instrument Panel Wire and Engine Room Main Wire (Left Kick Panel)

: Ground Points

Code	See Page	Ground Points Location
EA	48	Front Right Fender

: Splice Points

Code	See Page	Wire Harness with Splice Points	Code	See Page	Wire Harness with Splice Points
E1	48	Engine Room Main Wire			

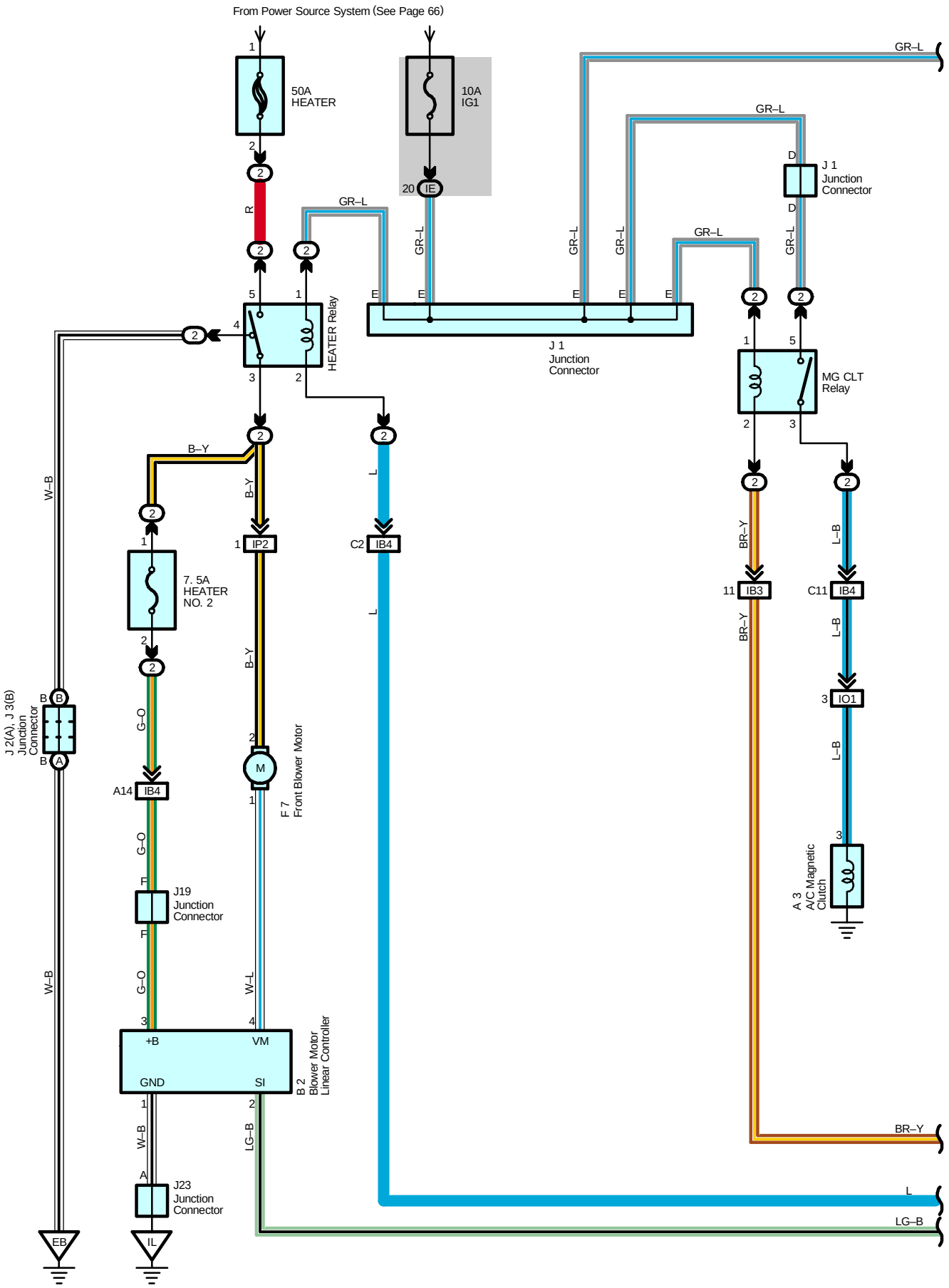
From Power Source System (See Page 66)
50A
HEATER
10A
IG1
20 IE
GR–L
J 1
Junction
Connector
HEATER Relay
J 1
Junction
Connector
MG CLT
Relay
B–Y
7. 5A
HEATER
NO. 2
IP2
C2 IB4
BR–Y
IB3
C11 IB4
L–B
IO1
A 3
A/C Magnetic
Clutch
J 2(A), J 3(B)
Junction
Connector
A14 IB4
F 7
Front Blower Motor
J19
Junction
Connector
B 2
Blower Motor
Linear Controller
+B
VM
GND
SI
J23
Junction
Connector
W–B
W–L
LG–B
L
BR–Y
EB
IL

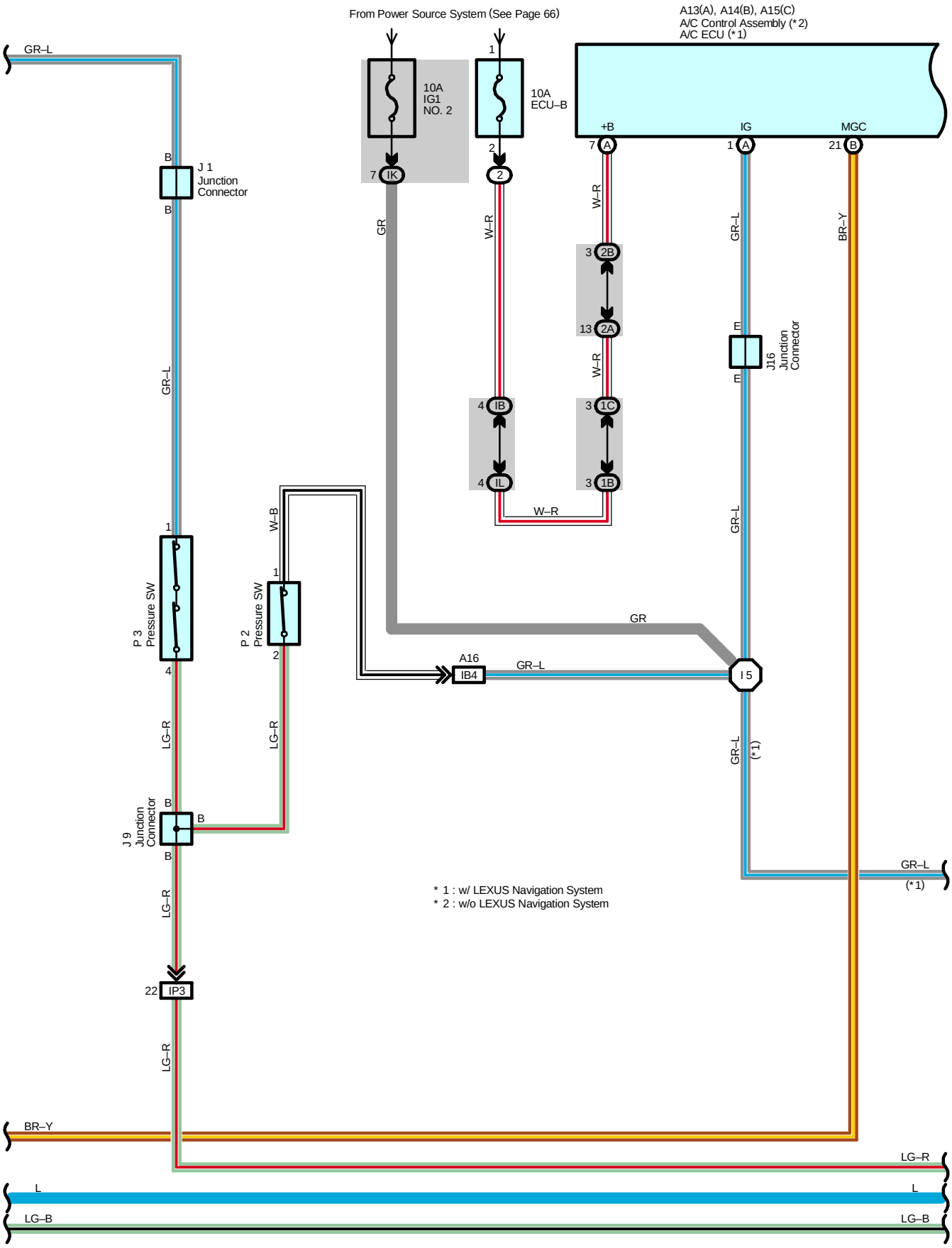
From Power Source System (See Page 66)
A13(A), A14(B), A15(C)
A/C Control Assembly (*2)
A/C ECU (*1)
10A
IG1
NO. 2
10A
ECU–B
+B
IG
MGC
J 1
Junction
Connector
J16
Junction
Connector
P 3
Pressure SW
P 2
Pressure SW
J 9
Junction
Connector
A16
IB4
I 5
IP3
GR–L
GR
W–R
W–B
LG–R
BR–Y
LG–B
L
(*1)
* 1 : w/ LEXUS Navigation System
* 2 : w/o LEXUS Navigation System

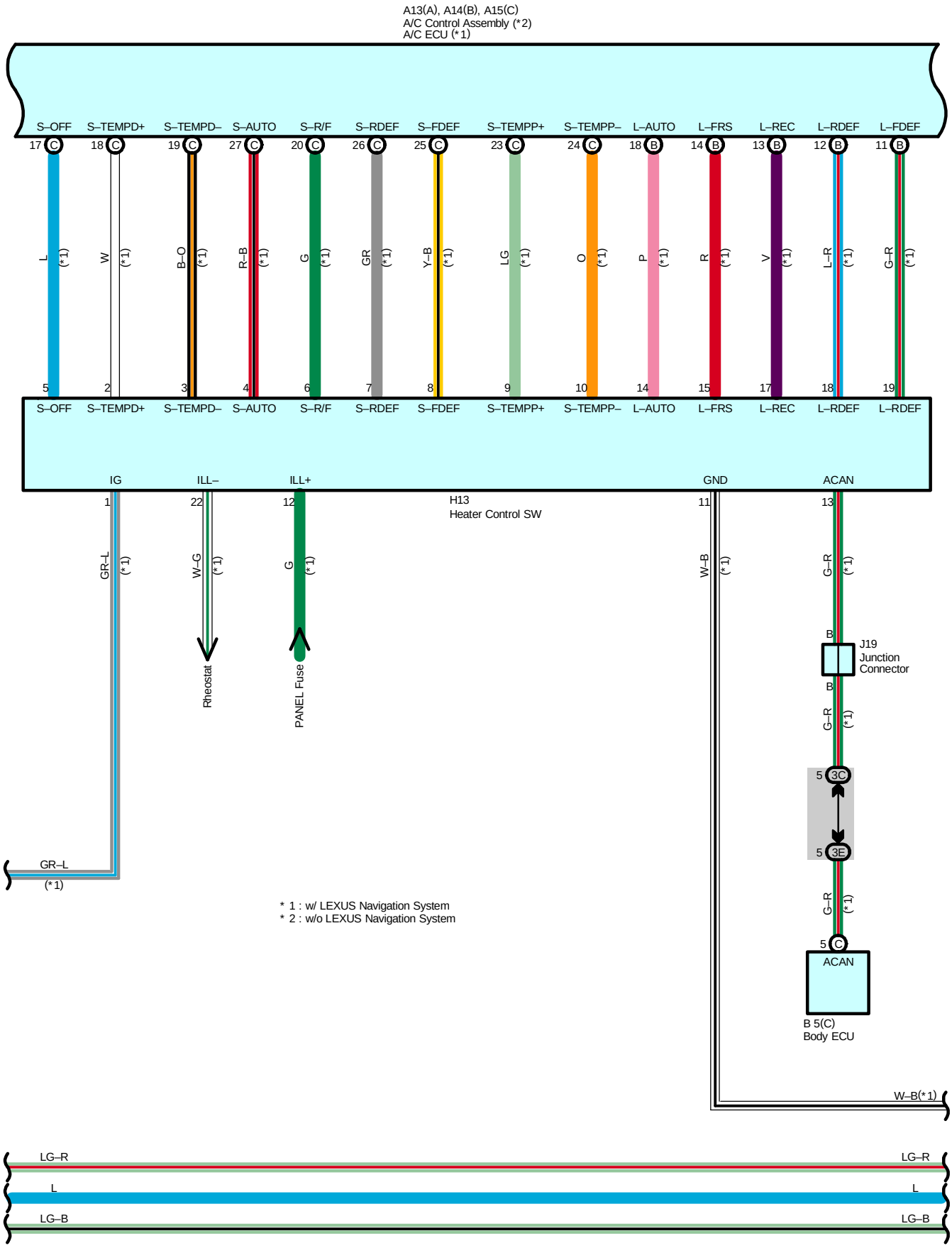
A13(A), A14(B), A15(C)
A/C Control Assembly (*2)
A/C ECU (*1)
S–OFF
S–TEMPD+
S–TEMPD–
S–AUTO
S–R/F
S–RDEF
S–FDEF
S–TEMPP+
S–TEMPP–
L–AUTO
L–FRS
L–REC
L–RDEF
L–FDEF
IG
ILL–
ILL+
GND
ACAN
H13
Heater Control SW
Rheostat
PANEL Fuse
J19
Junction
Connector
ACAN
B 5(C)
Body ECU
GR–L
W–B(*1)
LG–R
L
LG–B
* 1 : w/ LEXUS Navigation System
* 2 : w/o LEXUS Navigation System

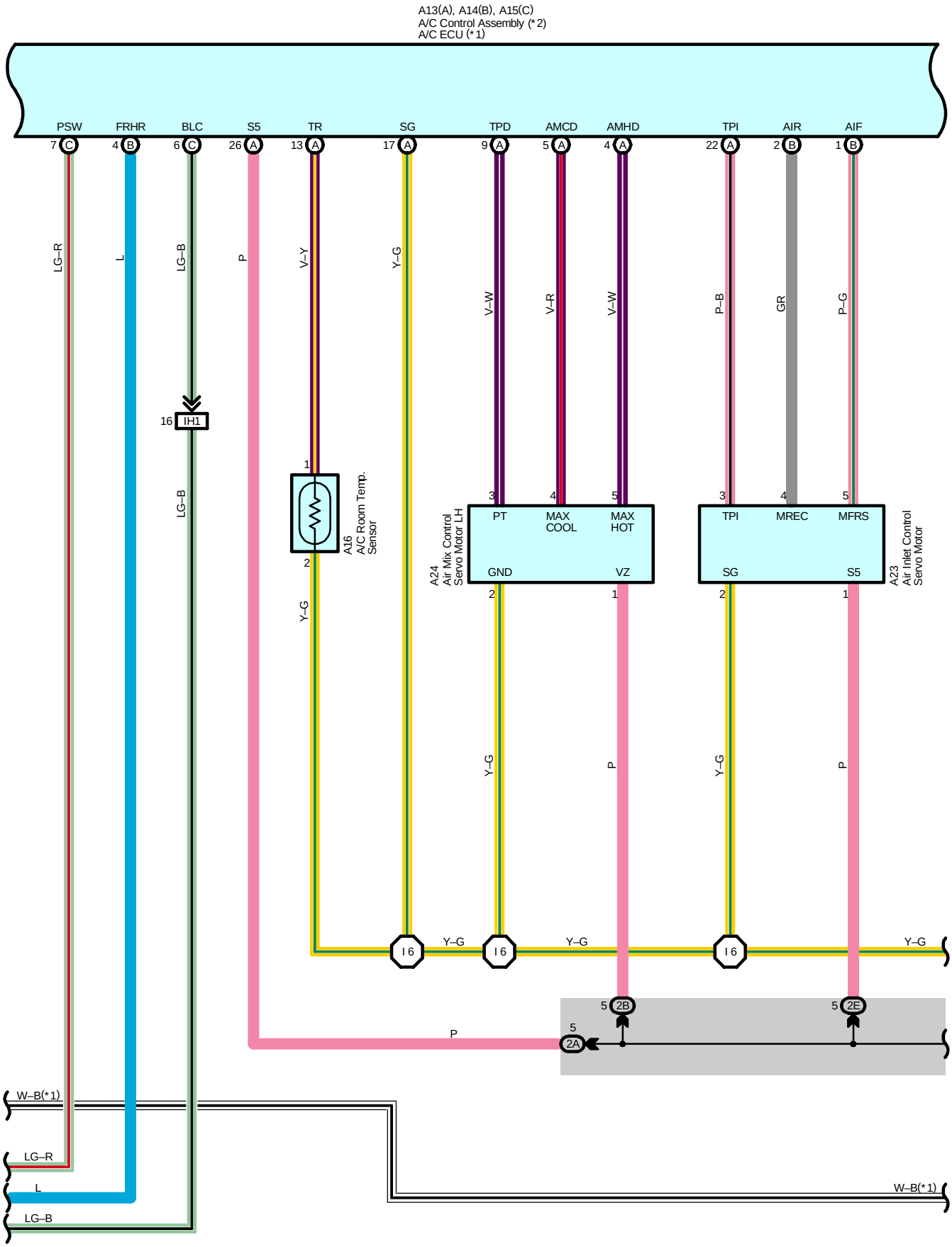
A13(A), A14(B), A15(C)
A/C Control Assembly (*2)
A/C ECU (*1)
PSW
FRHR
BLC
S5
TR
SG
TPD
AMCD
AMHD
TPI
AIR
AIF
7 C
4 B
6 C
26 A
13 A
17 A
9 A
5 A
4 A
22 A
2 B
1 B
LG–R
L
LG–B
P
V–Y
Y–G
V–W
V–R
V–W
P–B
GR
P–G
16 IH1
LG–B
1
2
A16
A/C Room Temp. Sensor
Y–G
A24
Air Mix Control Servo Motor LH
3 PT
4 MAX COOL
5 MAX HOT
GND 2
VZ 1
A23
Air Inlet Control Servo Motor
3 TPI
4 MREC
5 MFRS
SG 2
S5 1
Y–G
P
Y–G
P
I 6
Y–G
I 6
Y–G
I 6
Y–G
5 2B
5 2E
5 2A
P
W–B(*1)
LG–R
L
LG–B
W–B(*1)

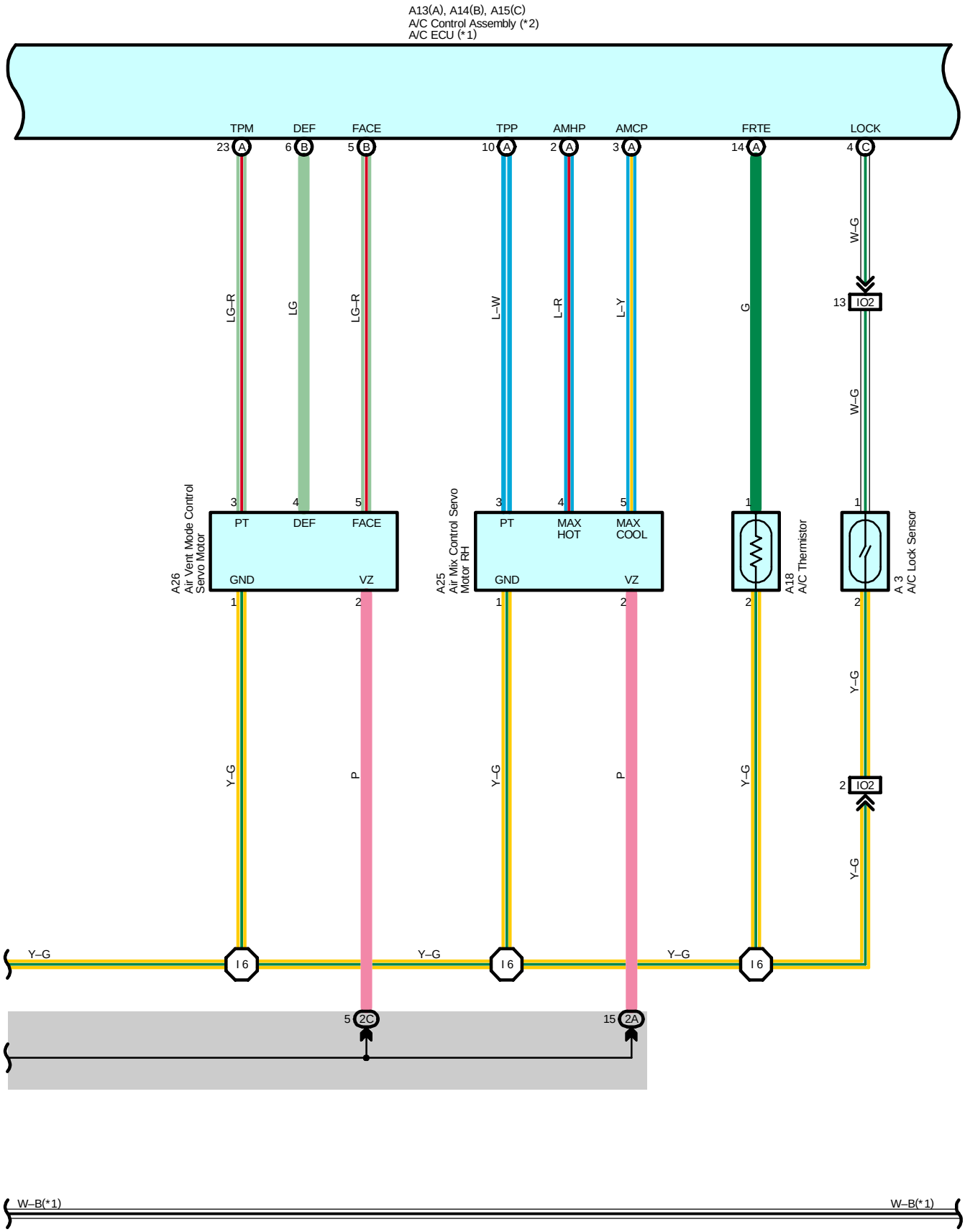
A13(A), A14(B), A15(C)
A/C Control Assembly (*2)
A/C ECU (*1)
TPM
DEF
FACE
TPP
AMHP
AMCP
FRTE
LOCK
23 A
6 B
5 B
10 A
2 A
3 A
14 A
4 C
LG–R
LG
LG–R
L–W
L–R
L–Y
G
W–G
13 IO2
W–G
A26
Air Vent Mode Control
Servo Motor
3
4
5
PT
DEF
FACE
GND
VZ
1
2
A25
Air Mix Control Servo
Motor RH
3
4
5
PT
MAX
HOT
MAX
COOL
GND
VZ
1
2
1
2
A18
A/C Thermistor
1
2
A 3
A/C Lock Sensor
Y–G
P
Y–G
P
Y–G
Y–G
2 IO2
Y–G
Y–G
I 6
Y–G
I 6
Y–G
I 6
5 2C
15 2A
W–B(*1)
W–B(*1)

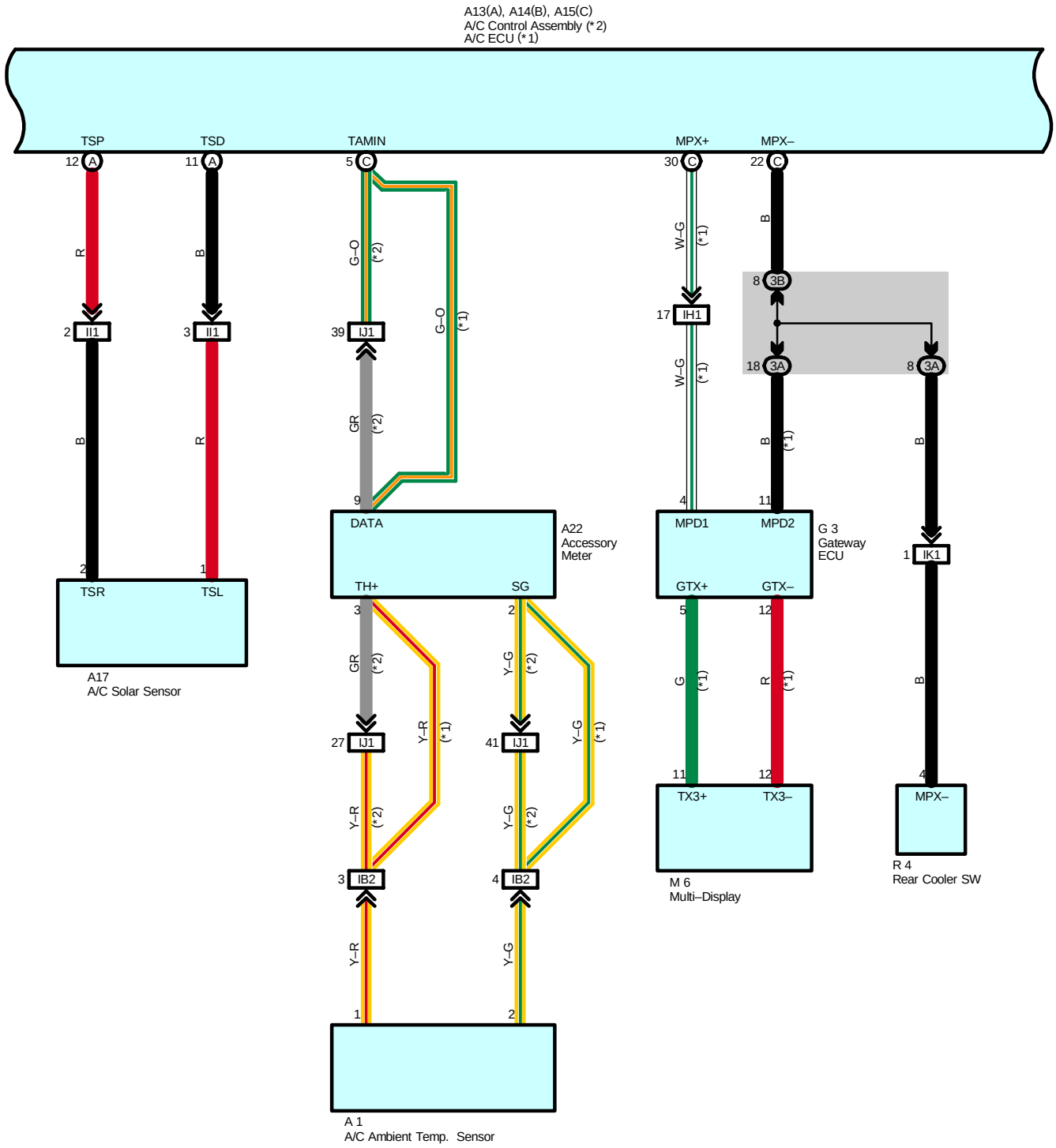

* 1 : w/ LEXUS Navigation System
* 2 : w/o LEXUS Navigation System

W–B(*1) W–B(*1)

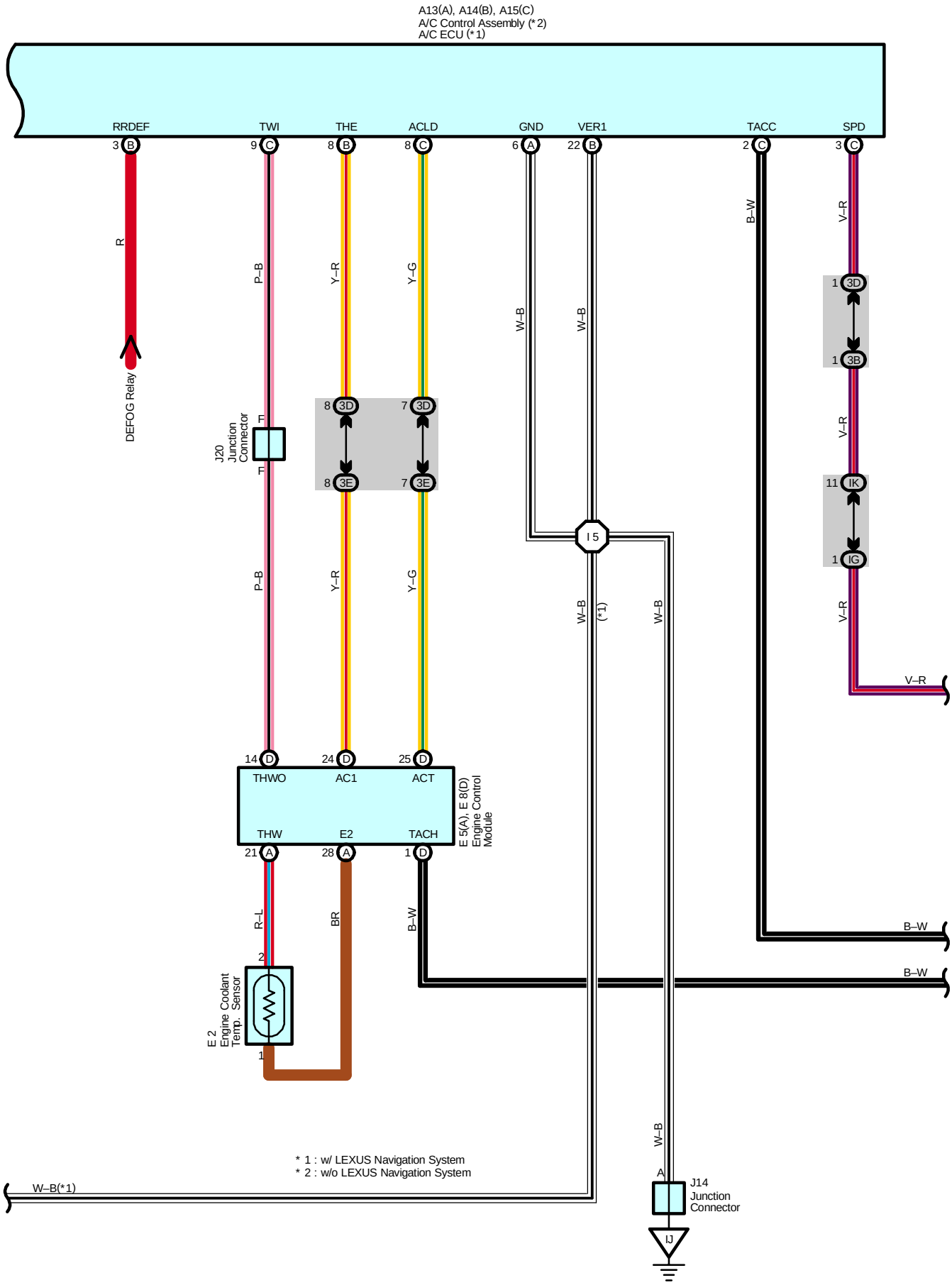
A13(A), A14(B), A15(C)
A/C Control Assembly (*2)
A/C ECU (*1)
RRDEF
TWI
THE
ACLD
GND
VER1
TACC
SPD
DEFOG Relay
J20 Junction Connector
THWO
AC1
ACT
THW
E2
TACH
E 5(A), E 8(D) Engine Control Module
E 2 Engine Coolant Temp. Sensor
I 5
J14 Junction Connector
* 1 : w/ LEXUS Navigation System
* 2 : w/o LEXUS Navigation System
W–B(*1)

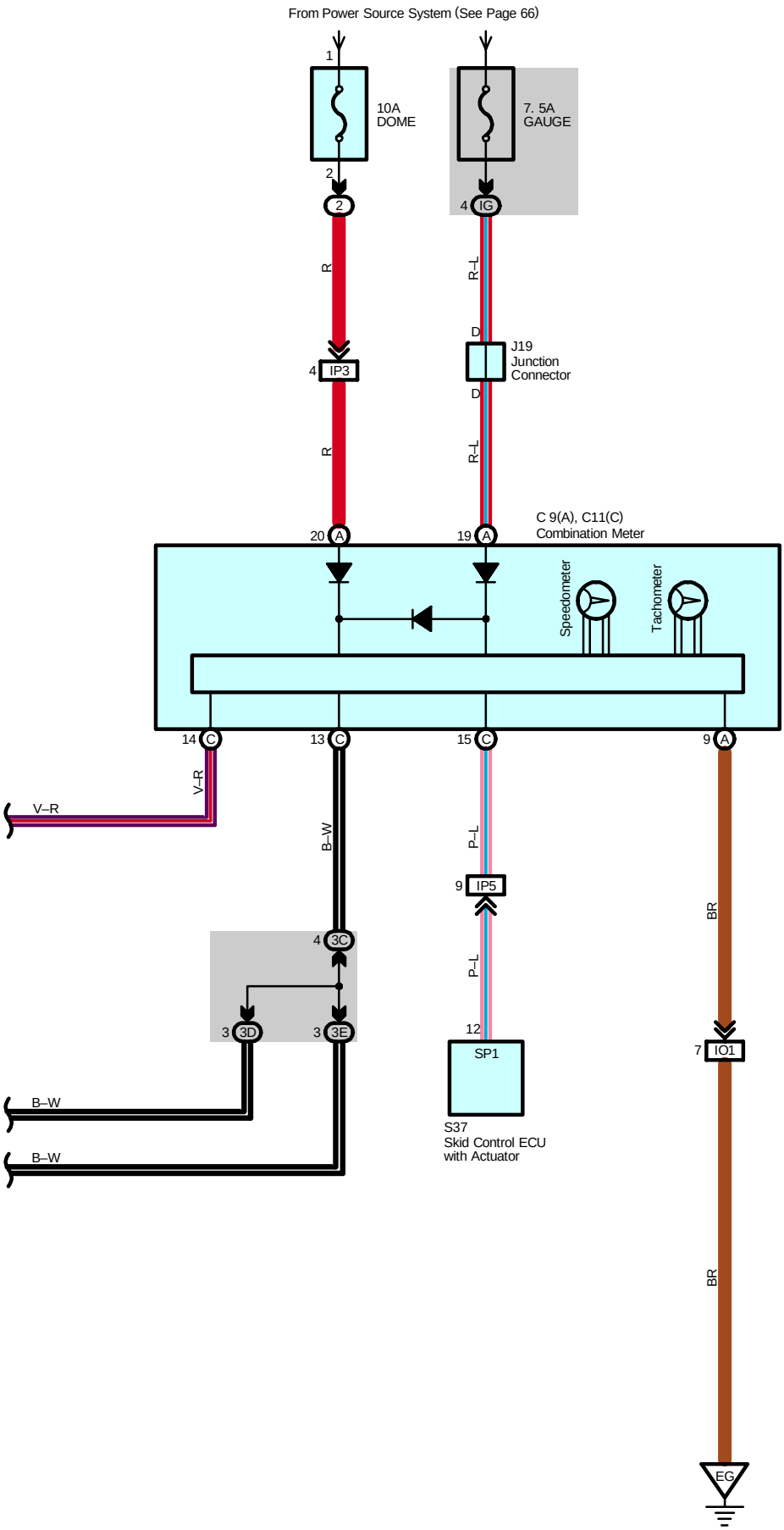
From Power Source System (See Page 66)
1
10A
DOME
2
2
R
4
IP3
R
20
A
7. 5A
GAUGE
4
IG
R–L
D
J19
Junction
Connector
D
R–L
19
A
C 9(A), C11(C)
Combination Meter
Speedometer
Tachometer
14
C
13
C
15
C
9
A
V–R
V–R
B–W
P–L
9
IP5
P–L
BR
4
3C
3
3D
3
3E
12
SP1
7
IO1
B–W
B–W
S37
Skid Control ECU
with Actuator
BR
EG

System Outline

1. Heater Blower Operation

Manual operation

When the blower speed is set to a certain level using the blower control SW, the A/C control assembly (w/o LEXUS navigation system), A/C ECU (w/ LEXUS navigation system) sends the signals to the blower control to control the blower motor speed.

Auto operation

When the auto SW is pushed, the A/C control assembly (w/o LEXUS navigation system), A/C ECU (w/ LEXUS navigation system) sends the signals from various sensors and temperature SW to the blower control to automatically control the blower motor speed.

2. Air Inlet Control Servo Motor Control

When the FRESH/RECIRC select SW is set to RECIRC, the motor in the air inlet control servo motor starts rotating to move the damper toward the RECIRC side. Since the damper position is detected by the TERMINAL TPI of the A/C control assembly (w/o LEXUS navigation system), A/C ECU (w/ LEXUS navigation system), the motor is continuously rotated until the damper reaches its stop position. When the FRESH/RECIRC select SW is set to FRESH, the motor in the air inlet control servo motor starts rotating to move the damper toward the FRESH side. Since the damper position is detected by the TERMINAL TPI of the A/C control assembly (w/o LEXUS navigation system), A/C ECU (w/ LEXUS navigation system), the motor is continuously rotated until the damper reaches its stop position.

3. Air Vent Mode Control Servo Motor Control

When the mode select SW is pushed, the A/C control assembly (w/o LEXUS navigation system), A/C ECU (w/ LEXUS navigation system) activates the air vent mode control servo motor. This causes the servo motor to rotate to the position (FACE, BI–LEVEL, FOOT, FOOT/DEF, DEF) selected using the mode select SW, and moves the damper.

4. Air Mix Control Servo Motor Control

When the temperature control SW on the driver's side is pressed, the A/C control assembly (w/o LEXUS navigation system), A/C ECU (w/ LEXUS navigation system) sends a signal to the air mix control servo motor on the driver's side. This signal drives the motor to reach the temperature set by the temperature control SW on the driver's side, and moves the damper. Passenger's side is operated as same as the driver's side.

5. Air Conditioning Operation

The A/C control assembly (w/o LEXUS navigation system), A/C ECU (w/ LEXUS navigation system) receives various signals, I.E., the engine RPM from the engine control module, out side air temperature signal from the A/C ambient temp. sensor and coolant temperature from the engine control module, etc.

When the engine is started and the A/C SW (A/C control assembly (w/o LEXUS navigation system), A/C ECU (w/ LEXUS navigation system)) is on, a signal is input to the A/C control assembly (w/o LEXUS navigation system), A/C ECU (w/ LEXUS navigation system).

As a result, the ground circuit in A/C control assembly (w/o LEXUS navigation system), A/C ECU (w/ LEXUS navigation system) is closed and current flows from IG1 fuse to TERMINAL 1 of the MG CLT relay to TERMINAL 2 to TERMINAL MGC of the A/C control assembly (w/o LEXUS navigation system), A/C ECU (w/ LEXUS navigation system) to GROUND, turning the MG CLT relay on, so that the magnetic clutch is on and the A/C compressor operates.

If the A/C control assembly (w/o LEXUS navigation system), A/C ECU (w/ LEXUS navigation system) detects the following conditions, it stops the air conditioning:

* Evaporator outlet air is too low.
* There is a marked difference between the compressor speed and the engine speed.
* The refrigerant pressure is abnormally high or abnormally low.
* The engine speed is too low.
* Rapid acceleration occurs.

Service Hints

P2 Pressure SW

1–2 : Open with the refrigerant pressure at less than approx. 225 kpa (2.3 kgf/cm^2, 32 psi) or more than approx. 3138 kpa (32 kgf/cm^2, 455 psi)

A13 (A), A14 (B) A/C Control Assembly (w/o LEXUS Navigation System), A/C ECU (w/ LEXUS Navigation System)

(A) 7–Ground : Always approx. 12 volts
(A) 1–Ground : Approx. 12 volts with the ignition SW at ON position
(B) 22, (A) 6–Ground : Always continuity

○ : Parts Location

Code	See Page	Code	See Page	Code	See Page
A1	36	B2	38	J9	40
A3	36	B5 C	38	J14	40
A13 A	38	C9 A	38	J16	40
A14 B	38	C11 C	38	J19	40
A15 C	38	E2	36	J20	40
A16	38	E5 A	39	J23	40
A17	38	E8 D	39	M6	40
A18	38	F7	39	P2	37
A22	38	G3	39	P3	37
A23	38	H13	39	R4	41
A24	38	J1	37	S37	37
A25	38	J2 A	37		
A26	38	J3 B	37		

: Relay Blocks

Code	See Page	Relay Blocks (Relay Block Location)
2	22	Engine Room R/B (Engine Compartment Left)

: Junction Block and Wire Harness Connector

Code	See Page	Junction Block and Wire Harness (Connector Location)
IB	26	Engine Room Main Wire and Driver Side J/B (Lower Finish Panel)
IE		
IG	27	Instrument Panel Wire and Driver Side J/B (Lower Finish Panel)
IK		
IL		
1B	30	Instrument Panel Wire and J/B No.1 (Instrument Panel Reinforcement Left)
1C		
2A	32	Instrument Panel Wire and J/B No.2 (Instrument Panel Reinforcement Center)
2B		
2C		
2E		
3A	34	Instrument Panel Wire and J/B No.3 (Instrument Panel Reinforcement Right)
3B		
3C		
3D		
3E		

: Connector Joining Wire Harness and Wire Harness

Code	See Page	Joining Wire Harness and Wire Harness (Connector Location)
IB2	50	Instrument Panel Wire and Engine Room Main Wire (Left Kick Panel)
IB3		
IB4		
IH1	52	Instrument Panel Wire and Instrument Panel Wire (Near the J/B No.1)
II1	52	Instrument Panel No.3 Wire and Instrument Panel Wire (Near the Combination Meter)
IJ1	52	Instrument Panel Wire and Instrument Panel No.2 Wire (Instrument Panel Brace LH)
IK1	52	Console Box Wire and Instrument Panel Wire (Under the Instrument Panel Brace LH)
IO1	54	Engine Wire and Instrument Panel Wire (Right Side of the Blower Unit)
IO2		
IP2	54	Instrument Panel Wire and Engine Room Main Wire (Right Kick Panel)
IP3		
IP5		

: **Ground Points**

Code	See Page	Ground Points Location
EB	48	Front Left Fender
EG	48	Rear Bank of Left Cylinder Head
IJ	50	Near the Right Side of Steering Column
IL	50	Right Kick Panel

: **Splice Points**

Code	See Page	Wire Harness with Splice Points	Code	See Page	Wire Harness with Splice Points
I5	52	Instrument Panel Wire	I6	52	Instrument Panel Wire

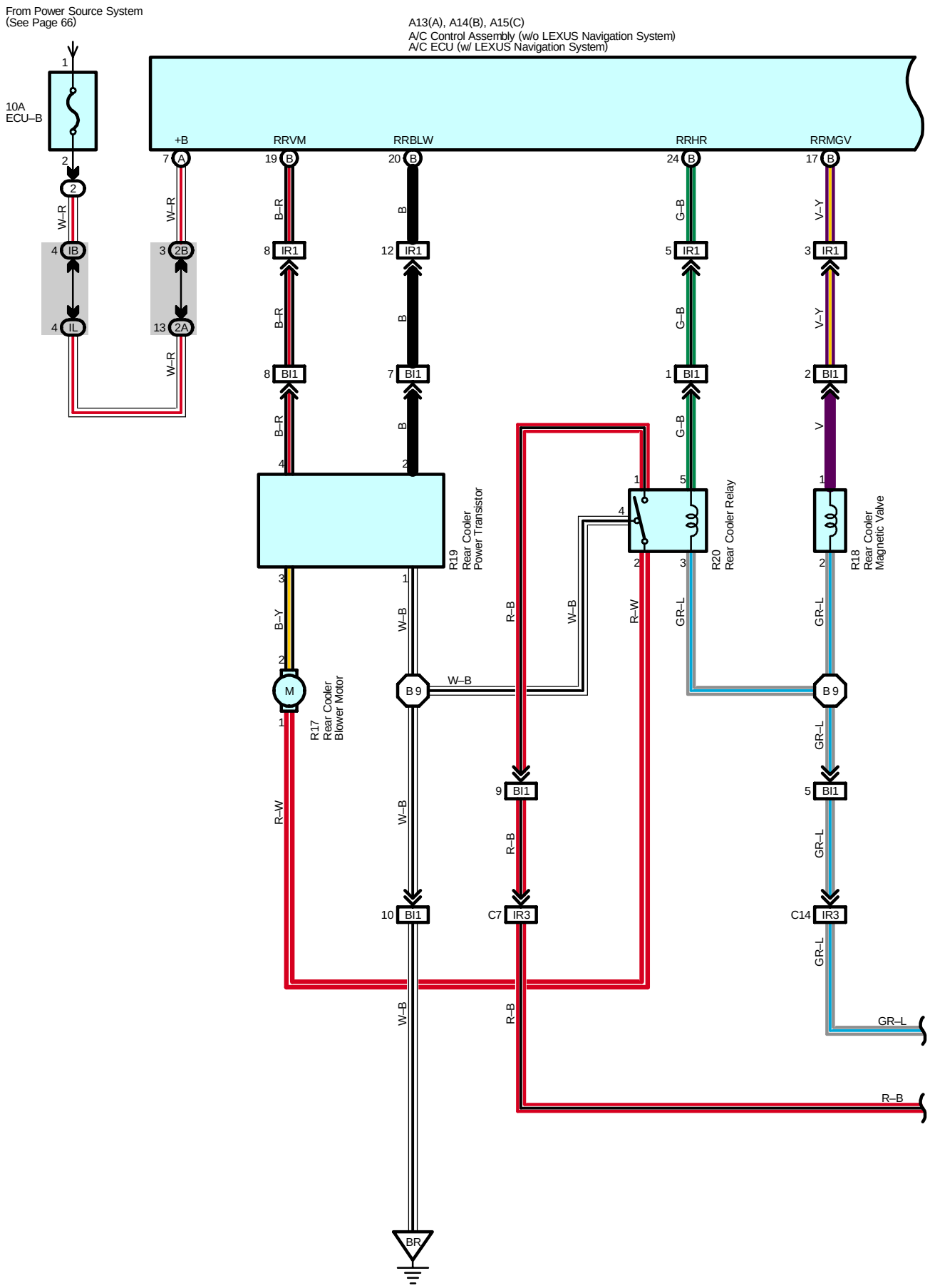
From Power Source System
(See Page 66)
A13(A), A14(B), A15(C)
A/C Control Assembly (w/o LEXUS Navigation System)
A/C ECU (w/ LEXUS Navigation System)
10A
ECU–B
+B
RRVM
RRBLW
RRHR
RRMGV
R19
Rear Cooler
Power Transistor
R20
Rear Cooler Relay
R18
Rear Cooler
Magnetic Valve
R17
Rear Cooler
Blower Motor
BR

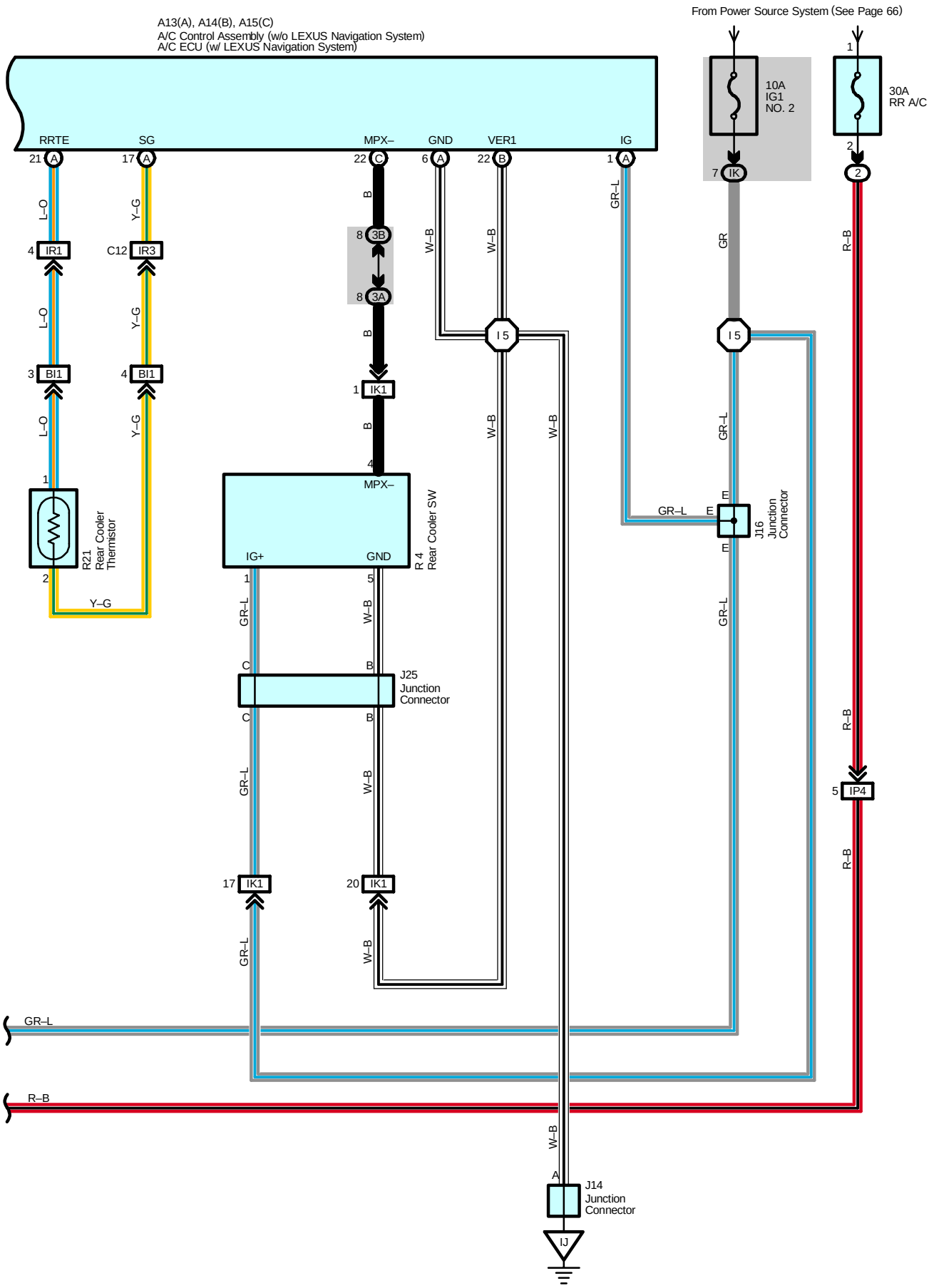
A13(A), A14(B), A15(C)
A/C Control Assembly (w/o LEXUS Navigation System)
A/C ECU (w/ LEXUS Navigation System)
From Power Source System (See Page 66)
10A
IG1
NO. 2
30A
RR A/C
RRTE
SG
MPX–
GND
VER1
IG
IR1
IR3
BI1
IK1
IP4
3B
3A
I 5
R21
Rear Cooler
Thermistor
R 4
Rear Cooler SW
IG+
J25
Junction
Connector
J16
Junction
Connector
J14
Junction
Connector
IJ
L–O
Y–G
B
W–B
GR–L
GR
R–B

System Outline

1. Manual Operation

When air volume is set by blower control SW within rear cooler SW, signal is transmitted from rear cooler SW to A/C control assembly (w/o LEXUS navigation system), A/C ECU (w/ LEXUS navigation system). A/C control assembly (w/o LEXUS navigation system), A/C ECU (w/ LEXUS navigation system) controls power transistor, and controls the blower motor at preset air volume.

2. Auto Operation

When blower control SW within rear cooler SW is set to AUTO position, signal is transmitted from rear cooler SW to A/C control assembly (w/o LEXUS navigation system), A/C ECU (w/ LEXUS navigation system). A/C control assembly (w/o LEXUS navigation system), A/C ECU (w/ LEXUS navigation system) controls the power transistor based on signal from various sensors, operates the blower motor, and adjusts air volume. It should be noted that auto control applies only when blowout port of front air conditioning is positioned at FACE, and blower is turned off otherwise.

3. Temperature Control

Temperature control of rear air conditioning can be set up to + / –5 °C of front air conditioning temperature setting.

∗ Rear air conditioning works only when front air conditioning is operating, and only blows air when front air conditioning is off.

Service Hints

A3 (A), A4 (B) A/C Control Assembly (w/o Navigation System), A/C ECU (w/ Navigation System)

(B) 22, (A) 6–Ground : Always continuity
(A) 1–Ground : Approx. 12 volts with the ignition SW at ON position
(A) 7–Ground : Always approx. 12 volts

R4 Rear Cooler SW

1–Ground : Approx. 12 volts with the ignition SW at ON position
5–Ground : Always continuity

○ : Parts Location

Code		See Page	Code	See Page	Code	See Page
A13	A	38	J16	40	R18	44
A14	B	38	J25	40	R19	44
A15	C	38	R4	41	R20	44
J14		40	R17	44	R21	44

▭ : Relay Blocks

Code	See Page	Relay Blocks (Relay Block Location)
2	22	Engine Room R/B (Engine Compartment Left)

▭ : Junction Block and Wire Harness Connector

Code	See Page	Junction Block and Wire Harness (Connector Location)
IB	26	Engine Room Main Wire and Driver Side J/B (Lower Finish Panel)
IK	27	Instrument Panel Wire and Driver Side J/B (Lower Finish Panel)
IL		
2A	32	Instrument Panel Wire and J/B No.2 (Instrument Panel Reinforcement Center)
2B		
3A	34	Instrument Panel Wire and J/B No.3 (Instrument Panel Reinforcement Right)
3B		

▭ : Connector Joining Wire Harness and Wire Harness

Code	See Page	Joining Wire Harness and Wire Harness (Connector Location)
IK1	52	Console Box Wire and Instrument Panel Wire (Under the Instrument Panel Brace LH)
IP4	54	Instrument Panel Wire and Engine Room Main Wire (Right Kick Panel)
IR1	56	Instrument Panel Wire and Floor Wire (Right Kick Panel)
IR3		
BI1	60	Floor Wire and Rear A/C Sub Wire (Right Quarter Panel Inner)

: Ground Points

Code	See Page	Ground Points Location
IJ	50	Near the Right Side of Steering Column
BR	58	Right Quarter Panel Inner

: Splice Points

Code	See Page	Wire Harness with Splice Points	Code	See Page	Wire Harness with Splice Points
I5	52	Instrument Panel Wire	B9	60	Rear A/C Sub Wire

I GROUND POINT

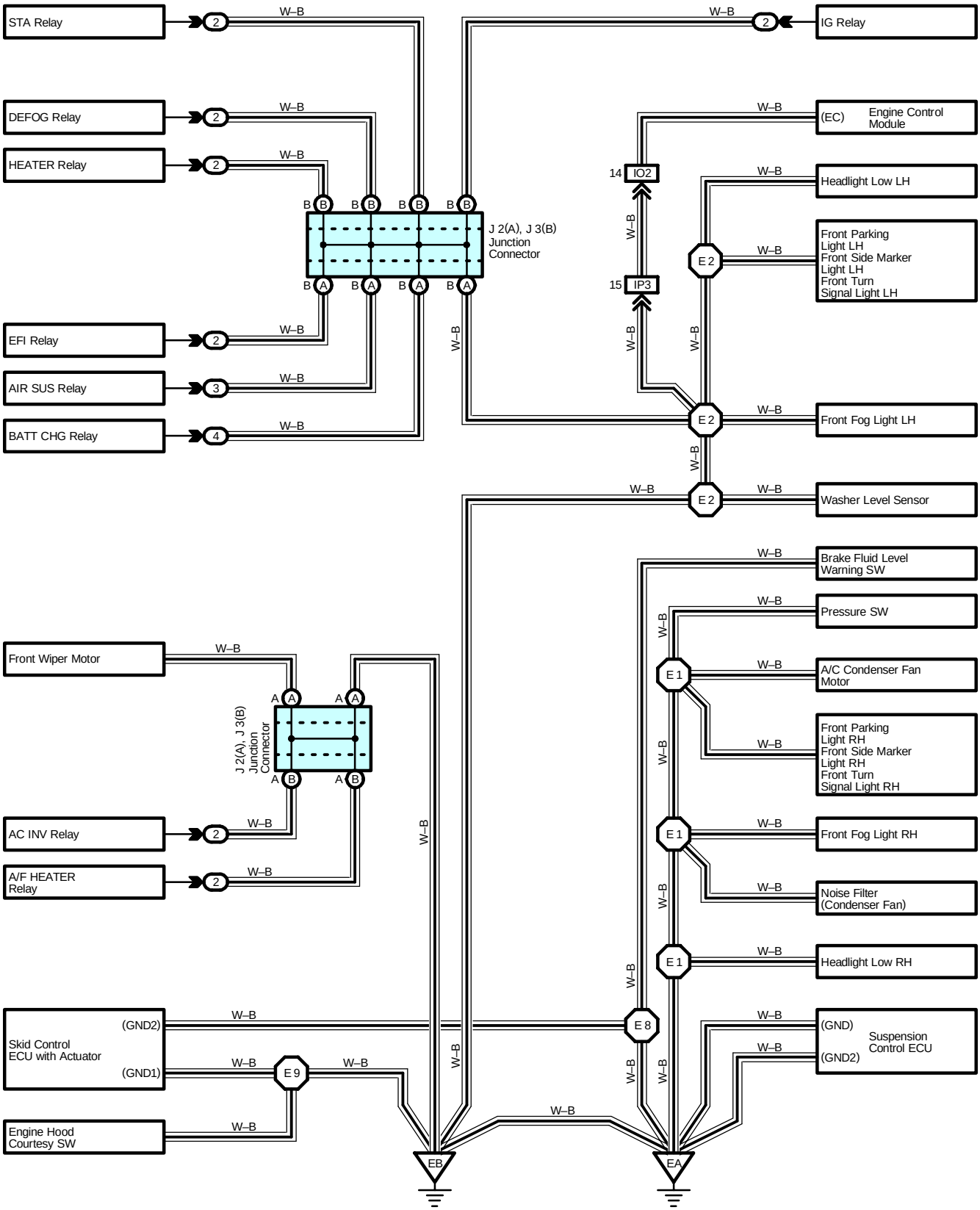

* 1 : w/ LEXUS Navigation System
* 2 : w/o LEXUS Navigation System

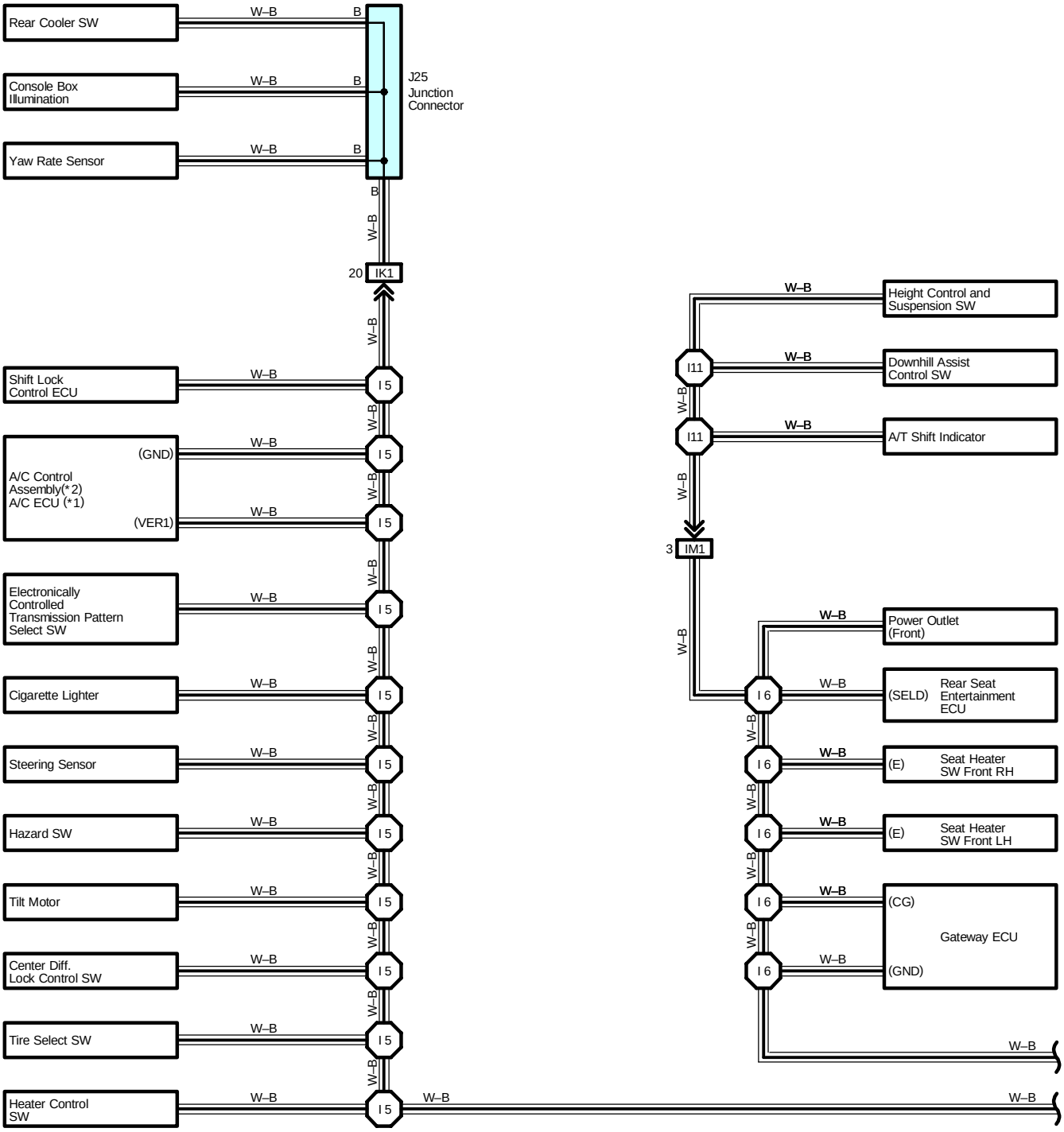

I GROUND POINT

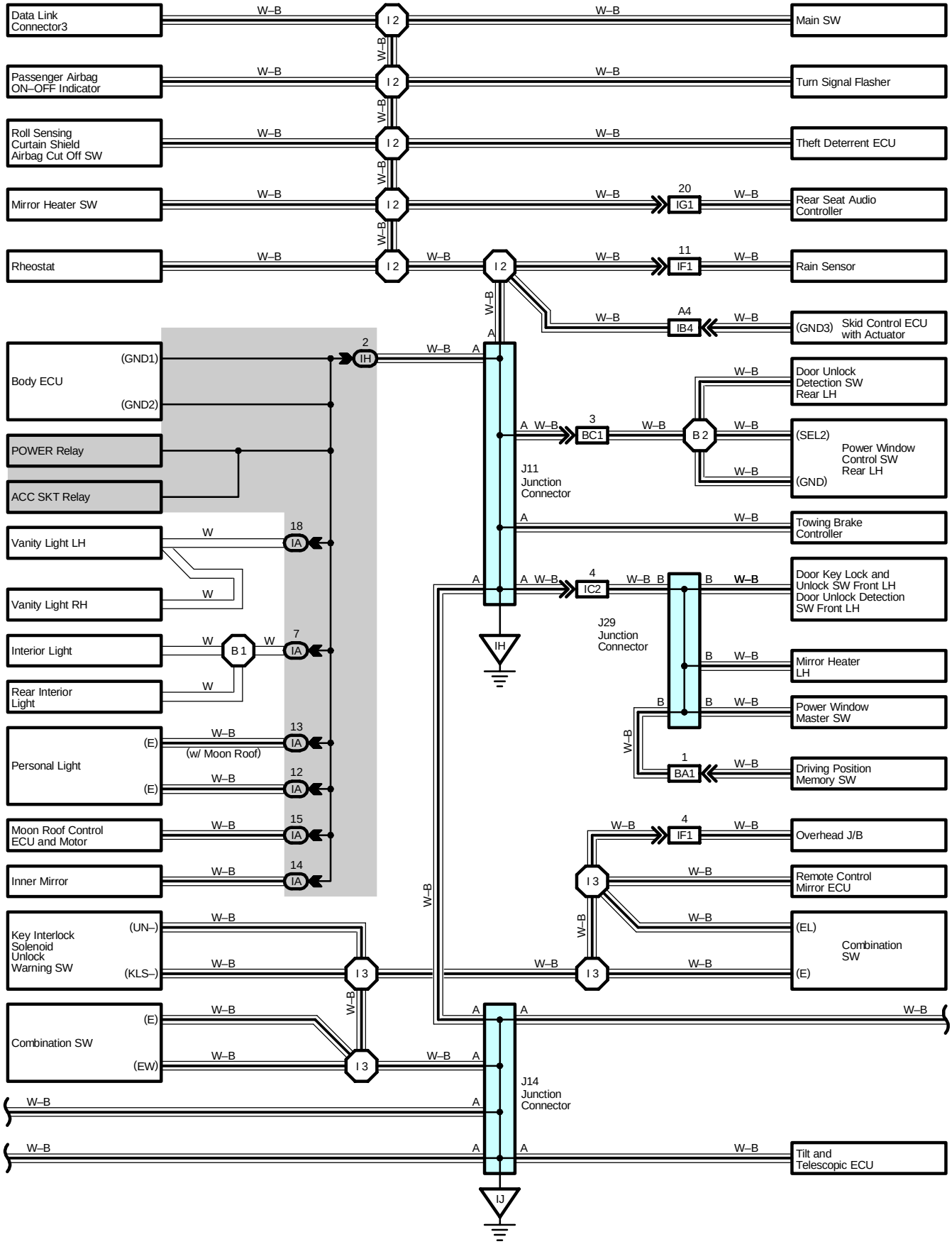

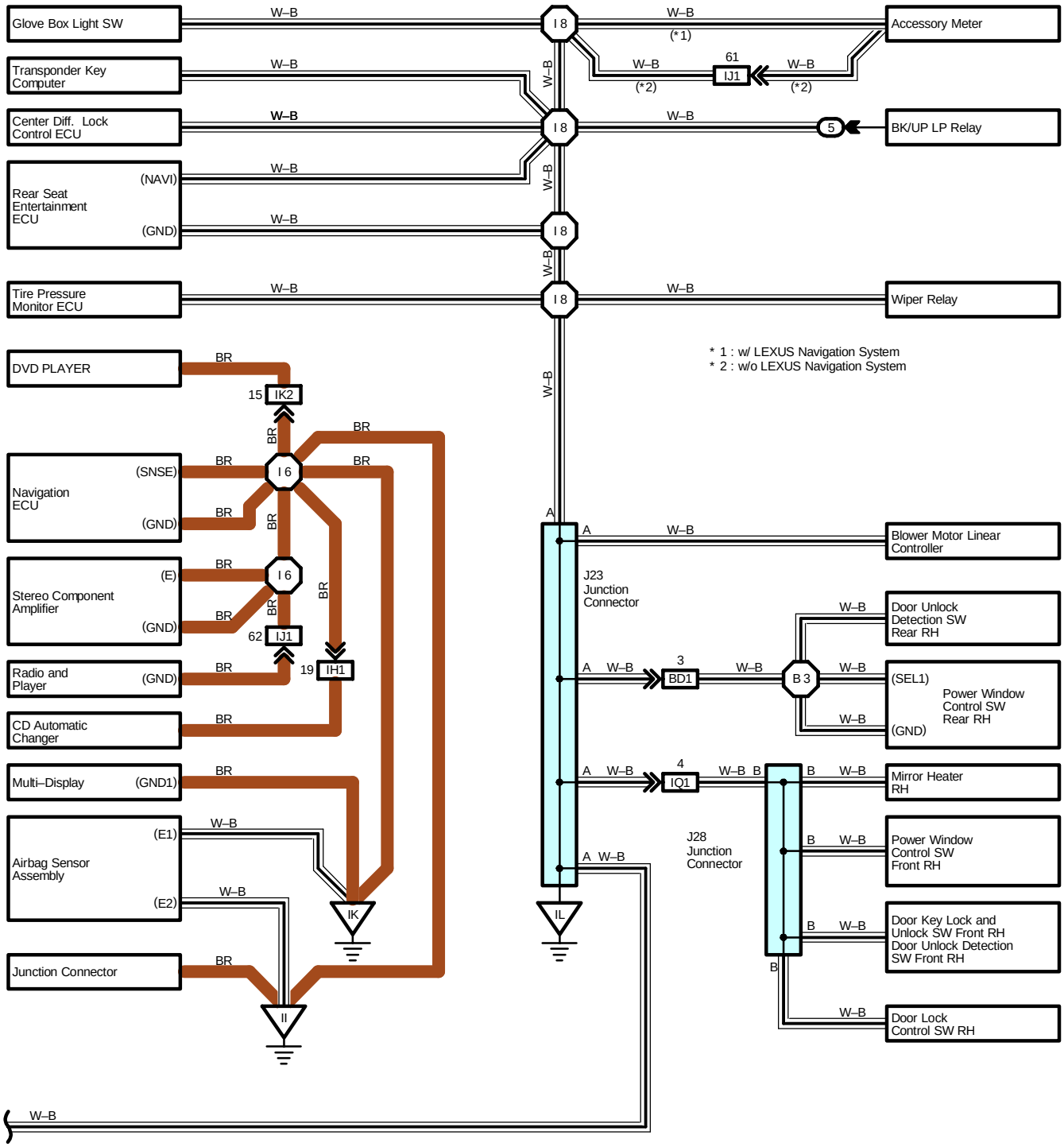
Glove Box Light SW
Transponder Key Computer
Center Diff. Lock Control ECU
Rear Seat Entertainment ECU
(NAVI)
(GND)
Tire Pressure Monitor ECU
DVD PLAYER
Navigation ECU
(SNSE)
(GND)
Stereo Component Amplifier
(E)
(GND)
Radio and Player
(GND)
CD Automatic Changer
Multi–Display
(GND1)
Airbag Sensor Assembly
(E1)
(E2)
Junction Connector
W–B
BR
I 8
I 6
IK2
IJ1
IH1
IK
II
IL
Accessory Meter
(*1)
(*2)
61
IJ1
BK/UP LP Relay
5
Wiper Relay
* 1 : w/ LEXUS Navigation System
* 2 : w/o LEXUS Navigation System
J23 Junction Connector
Blower Motor Linear Controller
Door Unlock Detection SW Rear RH
3
BD1
B 3
(SEL1)
Power Window Control SW Rear RH
(GND)
4
IQ1
Mirror Heater RH
J28 Junction Connector
Power Window Control SW Front RH
Door Key Lock and Unlock SW Front RH
Door Unlock Detection SW Front RH
Door Lock Control SW RH

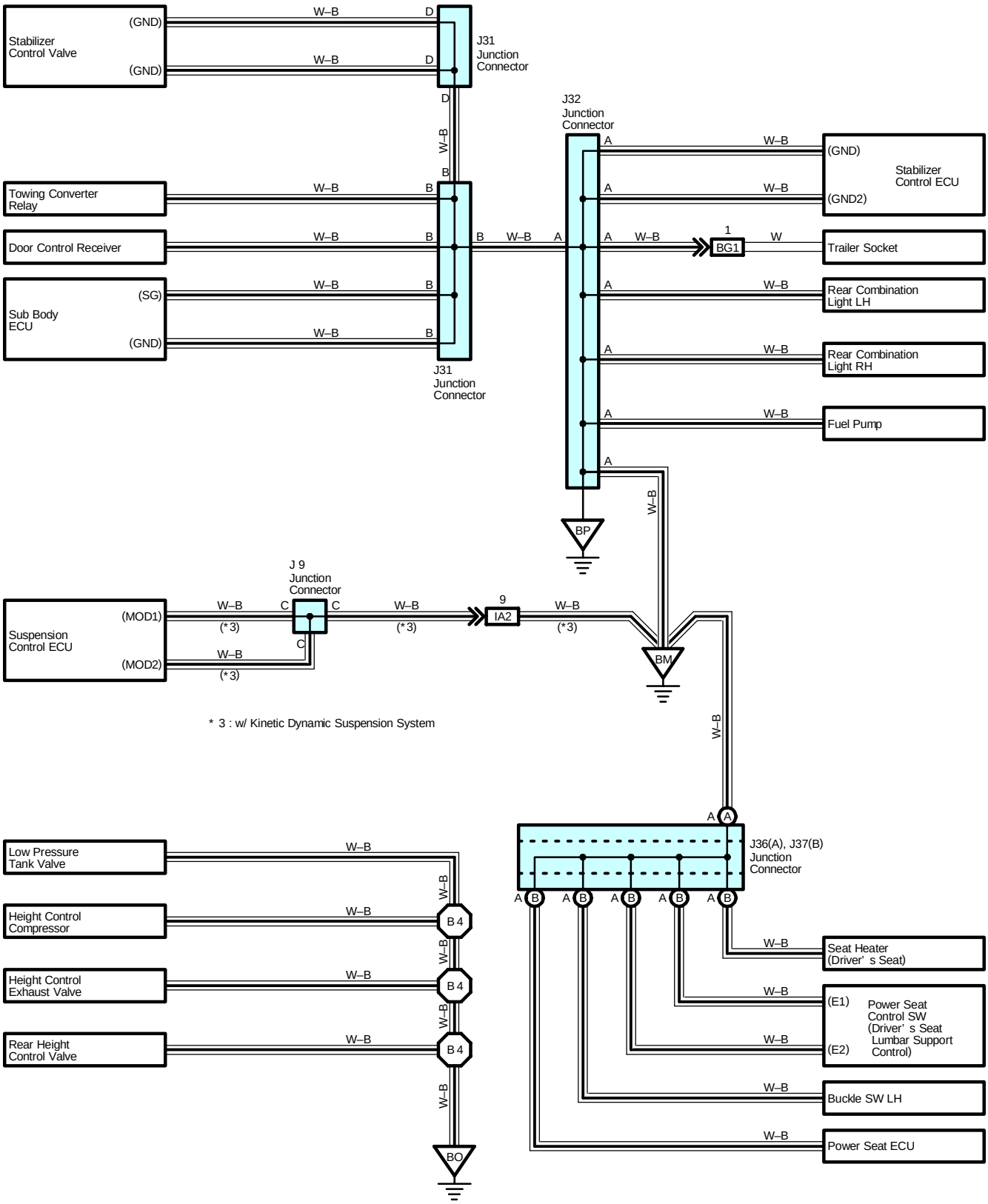
Stabilizer Control Valve
(GND)
(GND)
W–B
D
J31 Junction Connector
Towing Converter Relay
Door Control Receiver
Sub Body ECU
(SG)
(GND)
B
J32 Junction Connector
A
(GND)
(GND2)
Stabilizer Control ECU
1
BG1
W
Trailer Socket
Rear Combination Light LH
Rear Combination Light RH
Fuel Pump
BP
J 9 Junction Connector
C
Suspension Control ECU
(MOD1)
(MOD2)
(*3)
9
IA2
BM
* 3 : w/ Kinetic Dynamic Suspension System
J36(A), J37(B) Junction Connector
Low Pressure Tank Valve
Height Control Compressor
Height Control Exhaust Valve
Rear Height Control Valve
B 4
BO
Seat Heater (Driver' s Seat)
(E1)
(E2)
Power Seat Control SW (Driver' s Seat Lumbar Support Control)
Buckle SW LH
Power Seat ECU

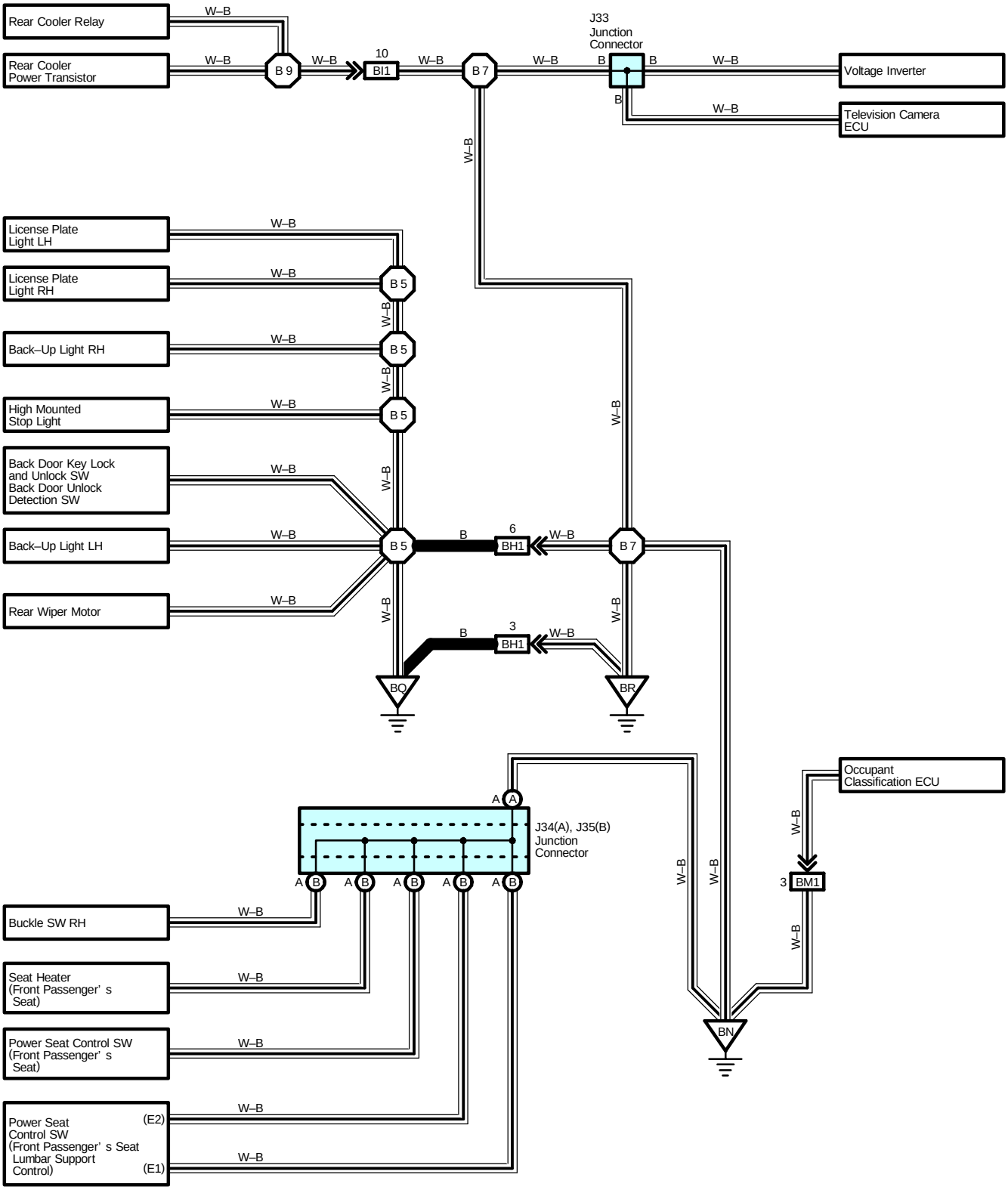
Rear Cooler Relay
Rear Cooler Power Transistor
W–B
B 9
10
BI1
B 7
J33 Junction Connector
B
Voltage Inverter
Television Camera ECU
License Plate Light LH
License Plate Light RH
Back–Up Light RH
High Mounted Stop Light
Back Door Key Lock and Unlock SW Back Door Unlock Detection SW
Back–Up Light LH
Rear Wiper Motor
B 5
6
BH1
3
BQ
BR
Occupant Classification ECU
J34(A), J35(B) Junction Connector
A
BM1
Buckle SW RH
Seat Heater (Front Passenger' s Seat)
Power Seat Control SW (Front Passenger' s Seat)
Power Seat Control SW (Front Passenger' s Seat Lumbar Support Control)
(E2)
(E1)
BN

I GROUND POINT

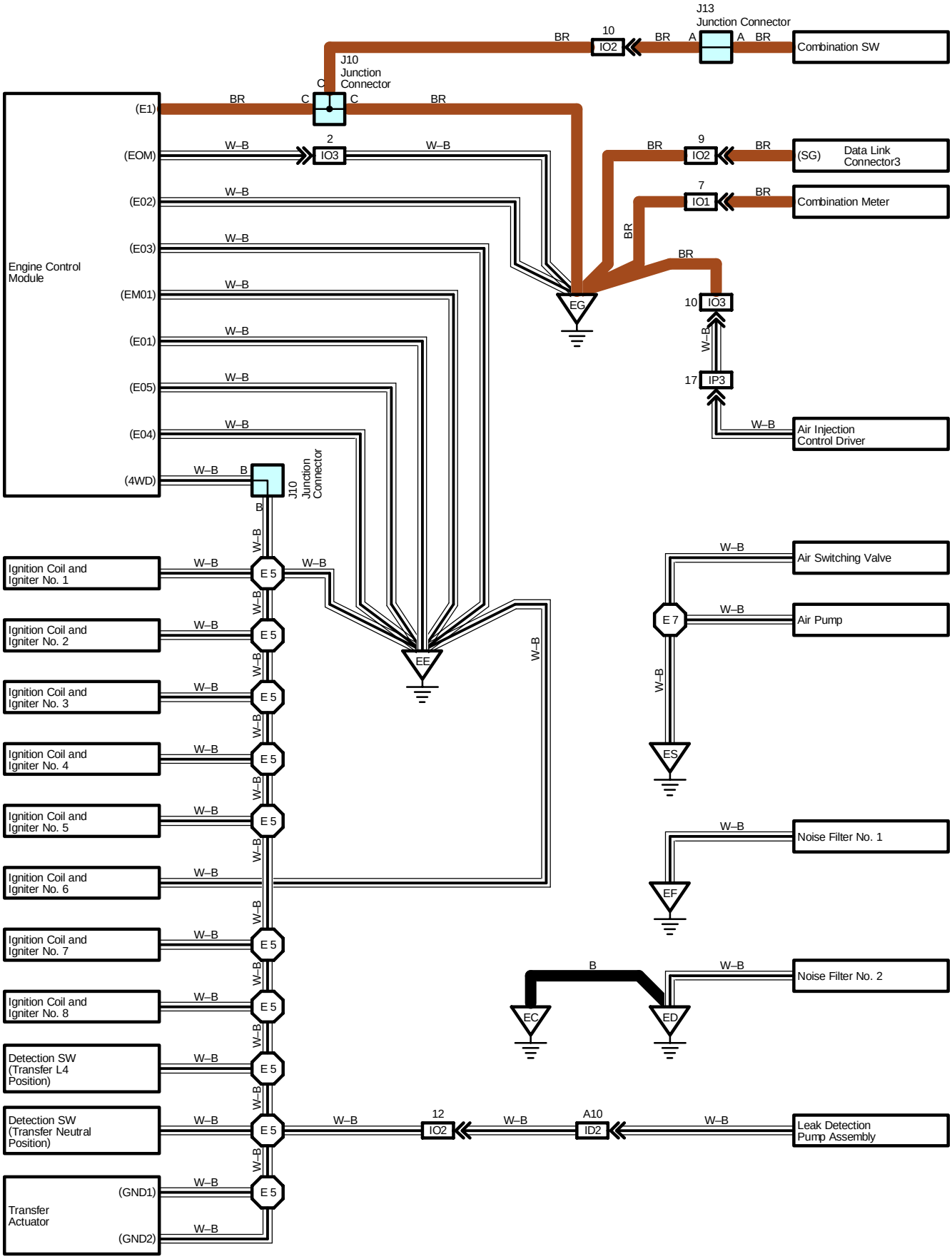

○ : Parts Location

Code		See Page	Code	See Page	Code		See Page
J2	A	37	J14	40	J32		43
J3	B	37	J23	40	J33		43
J9		40	J25	40	J34	A	46
J10		40	J28	43	J35	B	46
J11		40	J29	43	J36	A	46
J13		40	J31	43	J37	B	46

⬭ : Relay Blocks

Code	See Page	Relay Blocks (Relay Block Location)
2	22	Engine Room R/B (Engine Compartment Left)
3	23	Engine Room R/B No.3 (Engine Compartment Left)
4	23	Engine Room R/B No.4 (Engine Compartment Left)
5	24	Passenger Side R/B (Right Kick Panel)

⬭ : Junction Block and Wire Harness Connector

Code	See Page	Junction Block and Wire Harness (Connector Location)
IA	26	Roof Wire and Driver Side J/B (Lower Finish Panel)
IH	27	Instrument Panel Wire and Driver Side J/B (Lower Finish Panel)

▭ : Connector Joining Wire Harness and Wire Harness

Code	See Page	Joining Wire Harness and Wire Harness (Connector Location)
IA2	50	Floor No.2 Wire and Engine Room Main Wire (Left Kick Panel)
IB4	50	Instrument Panel Wire and Engine Room Main Wire (Left Kick Panel)
IC2	50	Front Door LH Wire and Instrument Panel Wire (Left Kick Panel)
ID2	50	Instrument Panel Wire and Floor No.2 Wire (Left Kick Panel)
IF1	52	Roof Wire and Instrument Panel Wire (Upper the Driver Side J/B)
IG1	52	Radio Installation Sub Wire and Instrument Panel Wire (Upper the Driver Side J/B)
IH1	52	Instrument Panel Wire and Instrument Panel Wire (Near the J/B No.1)
IJ1	52	Instrument Panel Wire and Instrument Panel No.2 Wire (Instrument Panel Brace LH)
IK1	52	Console Box Wire and Instrument Panel Wire (Under the Instrument Panel Brace LH)
IK2		
IM1	54	Instrument Panel Wire and Switch Wire (Front Side of the Console Box)
IO1	54	Engine Wire and Instrument Panel Wire (Right Side of the Blower Unit)
IO2		
IO3		
IP3	54	Instrument Panel Wire and Engine Room Main Wire (Right Kick Panel)
IQ1	56	Front Door RH Wire and Instrument Panel Wire (Right Kick Panel)
BA1	58	Front Door LH Wire and Front Door LH Sub Wire (Inside of Front Door LH)
BC1	58	Rear Door LH Wire and Instrument Panel Wire (Center Pillar LH)
BD1	58	Rear Door RH Wire and Instrument Panel Wire (Center Pillar RH)
BG1	60	Frame No.3 Wire and Floor No.2 Wire (Left Side of Rear Floor Cross Member)
BH1	60	Back Door No.1 Wire and Floor Wire (Right Quarter Panel Inner)
BI1	60	Floor Wire and Rear A/C Sub Wire (Right Quarter Panel Inner)
BM1	62	Floor Wire and Front Seat RH Wire (Under the Front Passenger's Seat)

I GROUND POINT

▽ : **Ground Points**

Code	See Page	Ground Points Location
EA	48	Front Right Fender
EB	48	Front Left Fender
EC	48	Front Right Fender
ED	48	Rear Bank of Right Cylinder Head
EE	48	Rear Bank of Left Cylinder Head
EF		
EG		
ES	48	Near the Starter
IH	50	Left Kick Panel
II	50	Near the Left Side of Steering Column
IJ	50	Near the Right Side of Steering Column
IK	50	Instrument Panel Brace LH
IL	50	Right Kick Panel
BM	58	Under the Driver's Seat
BN	58	Under the Front Passenger's Seat
BO	58	Near the Left Side of No.5 Cross Member
BP	58	Left Quarter Panel Inner
BQ	58	Back Door Panel Center
BR	58	Right Quarter Panel Inner

◯ : **Splice Points**

Code	See Page	Wire Harness with Splice Points	Code	See Page	Wire Harness with Splice Points
E1	48	Engine Room Main Wire	I8	52	Instrument Panel Wire
E2			I11	52	Switch Wire
E5	48	Engine Wire	B1	60	Roof Wire
E7	48	Engine No.2 Wire	B2	60	Rear Door LH Wire
E8	48	Engine Room Main Wire	B3	60	Rear Door RH Wire
E9			B4	60	Frame Wire
I2	52	Instrument Panel Wire	B5	60	Back Door No.1 Wire
I3			B7	60	Floor Wire
I5			B9	60	Rear A/C Sub Wire
I6					

J POWER SOURCE (Current Flow Chart)

The chart below shows the route by which current flows from the battery to each electrical source (Fusible Link, Circuit Breaker, Fuse, etc.) and other Parts.

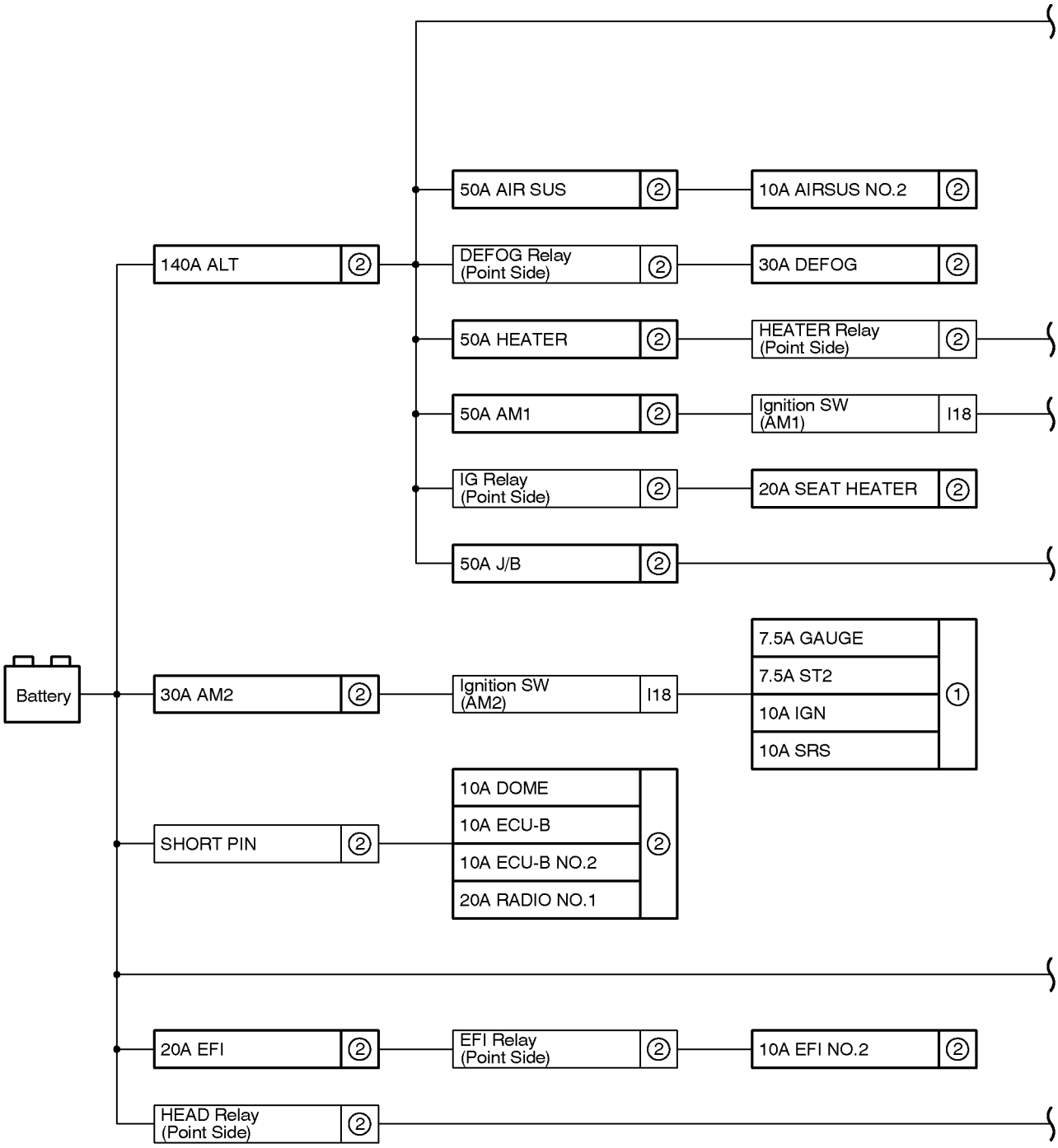

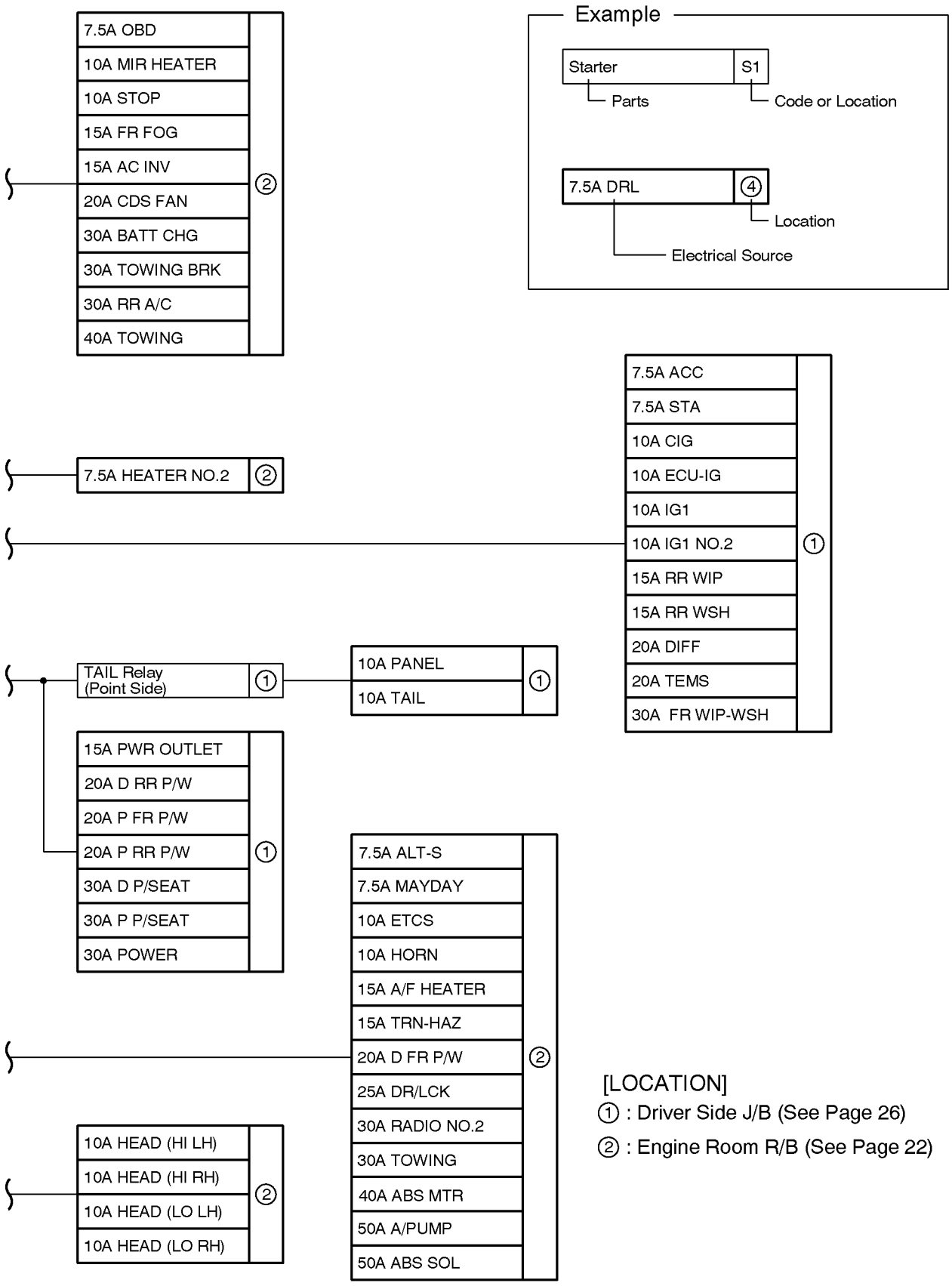
Example
Starter
S1
Parts
Code or Location
7.5A DRL
4
Location
Electrical Source
7.5A OBD
10A MIR HEATER
10A STOP
15A FR FOG
15A AC INV
20A CDS FAN
30A BATT CHG
30A TOWING BRK
30A RR A/C
40A TOWING
2
7.5A HEATER NO.2
2
7.5A ACC
7.5A STA
10A CIG
10A ECU-IG
10A IG1
10A IG1 NO.2
15A RR WIP
15A RR WSH
20A DIFF
20A TEMS
30A FR WIP-WSH
1
TAIL Relay
(Point Side)
1
10A PANEL
10A TAIL
1
15A PWR OUTLET
20A D RR P/W
20A P FR P/W
20A P RR P/W
30A D P/SEAT
30A P P/SEAT
30A POWER
1
7.5A ALT-S
7.5A MAYDAY
10A ETCS
10A HORN
15A A/F HEATER
15A TRN-HAZ
20A D FR P/W
25A DR/LCK
30A RADIO NO.2
30A TOWING
40A ABS MTR
50A A/PUMP
50A ABS SOL
2
10A HEAD (HI LH)
10A HEAD (HI RH)
10A HEAD (LO LH)
10A HEAD (LO RH)
2
[LOCATION]
1 : Driver Side J/B (See Page 26)
2 : Engine Room R/B (See Page 22)

Driver Side J/B (See Page 26)

Fuse		System	Page
7.5A	ACC	ABS, TRAC, VSC, Downhill Assist Control and Hill–Start Assist Control	238
		Accessory Meter	318
		Audio System (w/ Rear Seat Entertainment System)	338
		Audio System (w/o Rear Seat Entertainment System)	356
		Automatic Light Control	136
		Back–Up Light	170
		Center Differential Lock	258
		Cigarette Lighter and Power Outlet (12V)	288
		Cruise Control	232
		Door Lock Control and Theft Deterrent	202
		Electronically Controlled Transmission and A/T Indicator	222
		Engine Control	78
		Front Wiper and Washer (w/ Rain Sensor)	180
		Headlight	128
		Interior Light	148
		Key Reminder and Seat Belt Warning	172
		LEXUS Navigation System with Rear Seat Entertainment System and LEXUS Parking Assist (Rear View Monitor) with Rear Seat Entertainment System	322
		LEXUS Navigation System without Rear Seat Entertainment System and LEXUS Parking Assist (Rear View Monitor) without Rear Seat Entertainment System	330
		Light Auto Turn Off System	140
		Moon Roof	268
		Multiplex Communication System–BEAN	100
		Power Seat (Driver's Seat)	298
		Power Tilt and Power Telescopic	280
		Power Window	194
		Remote Control Mirror	274
		Shift Lock	286
		Trailer Towing	308
		Wireless Door Lock Control	212
7.5A	GAUGE	ABS, TRAC, VSC, Downhill Assist Control and Hill–Start Assist Control	238
		Accessory Meter	318
		Air Conditioning	376
		Audio System (w/ Rear Seat Entertainment System)	338
		Audio System (w/o Rear Seat Entertainment System)	356
		Center Differential Lock	258
		Charging	76
		Combination Meter	366
		Cruise Control	232
		Door Lock Control and Theft Deterrent	202

∗ These are the page numbers of the first page on which the related system is shown.

Fuse		System	Page
7.5A	GAUGE	Electric Modulated Air Suspension	246
		Electronically Controlled Transmission and A/T Indicator	222
		Engine Control	78
		Front Wiper and Washer (w/ Rain Sensor)	180
		Interior Light	148
		Key Reminder and Seat Belt Warning	172
		Kinetic Dynamic Suspension System	254
		LEXUS Navigation System with Rear Seat Entertainment System and LEXUS Parking Assist (Rear View Monitor) with Rear Seat Entertainment System	322
		LEXUS Navigation System without Rear Seat Entertainment System and LEXUS Parking Assist (Rear View Monitor) without Rear Seat Entertainment System	330
		Moon Roof	268
		Multiplex Communication System–BEAN	100
		Rear Wiper and Washer	190
		SRS	261
		Taillight and Illumination	158
		Tire Pressure Warning System	176
7.5A	ST2	Electronically Controlled Transmission and A/T Indicator	222
		Engine Control	78
		Starting	70
10A	CIG	Cigarette Lighter and Power Outlet (12V)	288
10A	ECU–IG	ABS, TRAC, VSC, Downhill Assist Control and Hill–Start Assist Control	238
		Accessory Meter	318
		Automatic Light Control	136
		Door Lock Control and Theft Deterrent	202
		Electric Modulated Air Suspension	246
		Electric Tension Reducer	296
		Engine Immobilizer System	94
		Front Wiper and Washer (w/ Rain Sensor)	180
		Headlight	128
		Interior Light	148
		Key Reminder and Seat Belt Warning	172
		Kinetic Dynamic Suspension System	254
		LEXUS Navigation System with Rear Seat Entertainment System and LEXUS Parking Assist (Rear View Monitor) with Rear Seat Entertainment System	322
		LEXUS Navigation System without Rear Seat Entertainment System and LEXUS Parking Assist (Rear View Monitor) without Rear Seat Entertainment System	330
		Light Auto Turn Off System	140
		Moon Roof	268
		Multiplex Communication System–BEAN	100
		Power Seat (Driver's Seat)	298

∗ These are the page numbers of the first page on which the related system is shown.

Fuse		System	Page
10A	ECU–IG	Power Tilt and Power Telescopic	280
		Power Window	194
		Rear Wiper and Washer	190
		Remote Control Mirror	274
		Shift Lock	286
		Stop Light	166
		Tire Pressure Warning System	176
		Trailer Towing	308
		Wireless Door Lock Control	212
10A	IGN	ABS, TRAC, VSC, Downhill Assist Control and Hill–Start Assist Control	238
		Cruise Control	232
		Electronically Controlled Transmission and A/T Indicator	222
		Engine Control	78
		Key Reminder and Seat Belt Warning	172
		SRS	261
10A	IG1	Air Conditioning	376
		Automatic Glare–Resistant EC Mirror and Compass	292
		Charging	76
		Condenser Fan	374
		Rear Window Defogger	314
		Trailer Towing	308
10A	IG1 NO.2	ABS, TRAC, VSC, Downhill Assist Control and Hill–Start Assist Control	238
		Air Conditioning	376
		Back–Up Light	170
		Center Differential Lock	258
		Cruise Control	232
		Electronically Controlled Transmission and A/T Indicator	222
		Front Wiper and Washer (w/ Rain Sensor)	180
		Key Reminder and Seat Belt Warning	172
		Kinetic Dynamic Suspension System	254
		LEXUS Navigation System with Rear Seat Entertainment System and LEXUS Parking Assist (Rear View Monitor) with Rear Seat Entertainment System	322
		LEXUS Navigation System without Rear Seat Entertainment System and LEXUS Parking Assist (Rear View Monitor) without Rear Seat Entertainment System	330
		Mirror Heater	316
		Multiplex Communication System–BEAN	100
		Power Outlet (115V)	290
		Power Seat (Driver's Seat)	298
		Power Tilt and Power Telescopic	280
		Rear Air Conditioning	388
		Remote Control Mirror	274
		Seat Heater	306

∗ These are the page numbers of the first page on which the related system is shown.

Fuse		System	Page
10A	IG1 NO.2	Taillight and Illumination Trailer Towing Turn Signal and Hazard Warning Light	158 308 144
10A	PANEL	Accessory Meter Engine Control Taillight and Illumination	318 78 158
10A	SRS	SRS	261
10A	TAIL	Taillight and Illumination Trailer Towing	158 308
15A	PWR OUTLET	Cigarette Lighter and Power Outlet (12V)	288
15A	RR WIP	Multiplex Communication System–BEAN Rear Wiper and Washer	100 190
15A	RR WSH	Multiplex Communication System–BEAN Rear Wiper and Washer	100 190
20A	D RR P/W	Multiplex Communication System–BEAN Power Window	100 194
20A	DIFF	Center Differential Lock	258
20A	P FR P/W	Multiplex Communication System–BEAN Power Window	100 194
20A	P RR P/W	Multiplex Communication System–BEAN Power Window	100 194
20A	TEMS	Electric Modulated Air Suspension	246
30A	D P/SEAT	Power Seat (Driver's Seat)	298
30A	FR WIP–WSH	Front Wiper and Washer (w/ Rain Sensor) Front Wiper and Washer (w/o Rain Sensor)	180 186
30A	P P/SEAT	Power Seat (Front Passenger's Seat)	304
30A	POWER OR TI&TE	Moon Roof Power Tilt and Power Telescopic	268 280

Engine Room R/B (See Page 22)

Fuse		System	Page
7.5A	ALT–S	Charging	76
7.5A	HEATER NO.2	Air Conditioning	376
7.5A	OBD	Engine Control	78
10A	AIRSUS NO.2	Electric Modulated Air Suspension	246
10A	DOME	ABS, TRAC, VSC, Downhill Assist Control and Hill–Start Assist Control Accessory Meter Air Conditioning Audio System (w/ Rear Seat Entertainment System) Audio System (w/o Rear Seat Entertainment System) Combination Meter Cruise Control	238 318 376 338 356 366 232

∗ These are the page numbers of the first page on which the related system is shown.

Fuse		System	Page
10A	DOME	Door Lock Control and Theft Deterrent	202
		Electric Modulated Air Suspension	246
		Electronically Controlled Transmission and A/T Indicator	222
		Engine Control	78
		Front Wiper and Washer (w/ Rain Sensor)	180
		Garage Door Opener	178
		Interior Light	148
		Key Reminder and Seat Belt Warning	172
		LEXUS Navigation System with Rear Seat Entertainment System and LEXUS Parking Assist (Rear View Monitor) with Rear Seat Entertainment System	322
		LEXUS Navigation System without Rear Seat Entertainment System and LEXUS Parking Assist (Rear View Monitor) without Rear Seat Entertainment System	330
		Moon Roof	268
		Multiplex Communication System–BEAN	100
		Rear Wiper and Washer	190
		Taillight and Illumination	158
		Tire Pressure Warning System	176
10A	ECU–B	ABS, TRAC, VSC, Downhill Assist Control and Hill–Start Assist Control	238
		Accessory Meter	318
		Air Conditioning	376
		Automatic Light Control	136
		Door Lock Control and Theft Deterrent	202
		Electric Modulated Air Suspension	246
		Engine Immobilizer System	94
		Front Wiper and Washer (w/ Rain Sensor)	180
		Headlight	128
		Interior Light	148
		Key Reminder and Seat Belt Warning	172
		LEXUS Navigation System with Rear Seat Entertainment System and LEXUS Parking Assist (Rear View Monitor) with Rear Seat Entertainment System	322
		LEXUS Navigation System without Rear Seat Entertainment System and LEXUS Parking Assist (Rear View Monitor) without Rear Seat Entertainment System	330
		Light Auto Turn Off System	140
		Moon Roof	268
		Multiplex Communication System–BEAN	100
		Power Seat (Driver's Seat)	298
		Power Tilt and Power Telescopic	280
		Power Window	194
		Rear Air Conditioning	388
		Rear Wiper and Washer	190
		Remote Control Mirror	274

∗ These are the page numbers of the first page on which the related system is shown.

Fuse		System	Page
10A	ECU–B	SRS Wireless Door Lock Control	261 212
10A	ECU–B NO.2	Door Lock Control and Theft Deterrent Multiplex Communication System–BEAN	202 100
10A	EFI NO.2	Electronically Controlled Transmission and A/T Indicator Engine Control	222 78
10A	ETCS	Cruise Control Electronically Controlled Transmission and A/T Indicator Engine Control	232 222 78
10A	HEAD(HI LH)	Headlight Multiplex Communication System–BEAN	128 100
10A	HEAD(HI RH)	Combination Meter Headlight Multiplex Communication System–BEAN	366 128 100
10A	HEAD(LO LH)	Combination Meter Front Fog Light Headlight Multiplex Communication System–BEAN	366 134 128 100
10A	HEAD(LO RH)	Headlight Multiplex Communication System–BEAN	128 100
10A	HORN	Door Lock Control and Theft Deterrent Horn Multiplex Communication System–BEAN	202 294 100
10A	MIR HEATER	Mirror Heater	316
10A	STOP	ABS, TRAC, VSC, Downhill Assist Control and Hill–Start Assist Control Cruise Control Electric Modulated Air Suspension Electronically Controlled Transmission and A/T Indicator Engine Control Front Wiper and Washer (w/ Rain Sensor) Kinetic Dynamic Suspension System Shift Lock Stop Light Trailer Towing	238 232 246 222 78 180 254 286 166 308
15A	AC INV	Power Outlet (115V)	290
15A	A/F HEATER	Engine Control	78
15A	FR FOG	Front Fog Light	134
15A	TRN–HAZ	Trailer Towing Turn Signal and Hazard Warning Light	308 144
20A	CDS FAN	Condenser Fan	374
20A	D FR P/W	Door Lock Control and Theft Deterrent Multiplex Communication System–BEAN	202 100

∗ These are the page numbers of the first page on which the related system is shown.

J POWER SOURCE (Current Flow Chart)

Fuse		System	Page
20A	D FR P/W	Power Window	194
		Wireless Door Lock Control	212
20A	EFI	Cruise Control	232
		Electronically Controlled Transmission and A/T Indicator	222
		Engine Control	78
20A	RADIO NO.1	Audio System (w/ Rear Seat Entertainment System)	338
		Audio System (w/o Rear Seat Entertainment System)	356
		LEXUS Navigation System with Rear Seat Entertainment System and LEXUS Parking Assist (Rear View Monitor) with Rear Seat Entertainment System	322
		LEXUS Navigation System without Rear Seat Entertainment System and LEXUS Parking Assist (Rear View Monitor) without Rear Seat Entertainment System	330
20A	SEAT HEATER	Seat Heater	306
25A	DR/LCK	Door Lock Control and Theft Deterrent	202
		Moon Roof	268
		Multiplex Communication System–BEAN	100
		Power Seat (Driver's Seat)	298
		Power Tilt and Power Telescopic	280
		Power Window	194
		Remote Control Mirror	274
		Wireless Door Lock Control	212
30A	ABS SOL	ABS, TRAC, VSC, Downhill Assist Control and Hill–Start Assist Control	238
30A	AM2	Charging	76
		Combination Meter	366
		Engine Control	78
		Ignition	72
		Starting	70
30A	BATT CHG	Trailer Towing	308
30A	DEFOG	Engine Control	78
		Rear Window Defogger	314
30A	RADIO NO.2	Audio System (w/ Rear Seat Entertainment System)	338
		Audio System (w/o Rear Seat Entertainment System)	356
		LEXUS Navigation System with Rear Seat Entertainment System and LEXUS Parking Assist (Rear View Monitor) with Rear Seat Entertainment System	322
		LEXUS Navigation System without Rear Seat Entertainment System and LEXUS Parking Assist (Rear View Monitor) without Rear Seat Entertainment System	330
30A	RR A/C	Rear Air Conditioning	388
30A	TOWING	Trailer Towing	308
30A	TOWING BRK	Trailer Towing	308
40A	ABS MTR	ABS, TRAC, VSC, Downhill Assist Control and Hill–Start Assist Control	238
40A	TOWING	Trailer Towing	308

∗ These are the page numbers of the first page on which the related system is shown.

Fuse		System	Page
50A	AIR SUS	Electric Modulated Air Suspension	246
50A	AM1	Charging Engine Control	76 78
50A	A/PUMP	Engine Control	78
50A	HEATER	Air Conditioning	376
50A	J/B	Automatic Light Control Door Lock Control and Theft Deterrent Light Auto Turn Off System Multiplex Communication System–BEAN Taillight and Illumination Wireless Door Lock Control	136 202 140 100 158 212
140A	ALT	Engine Control Rear Window Defogger Charging	78 314 76

∗ These are the page numbers of the first page on which the related system is shown.

K CONNECTOR LIST

A 1
Black

A 2
Black

A 3
Gray

A 7
Gray

A 8
Gray

A 9
Gray

A10
Gray

A11
Yellow

A12
Yellow

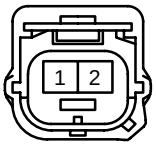

A13

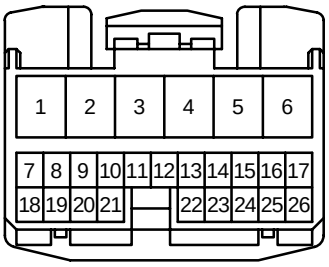

A14

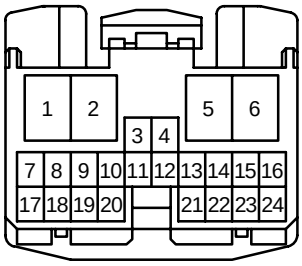

A15

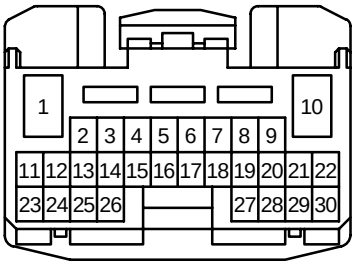

A16
Black

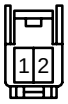

A17
Black

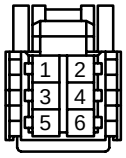

A18

A19

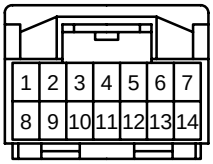

A20
Black

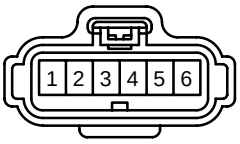

A21
Black

A22
Gray

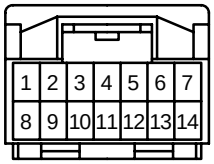

A23
Black

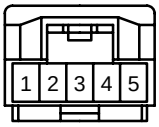

A24
Black

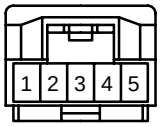

A25
Black

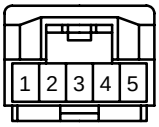

A26
Black

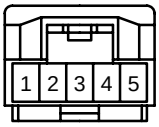

A27
Yellow

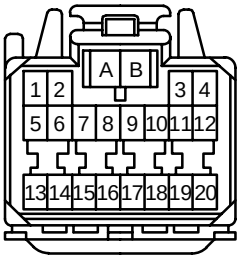

A28
Yellow

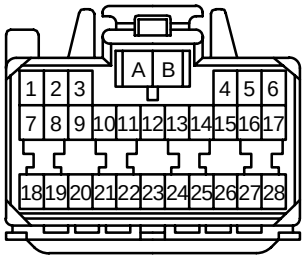

A29
Yellow

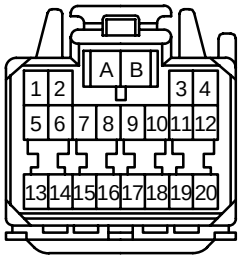

A30
Yellow

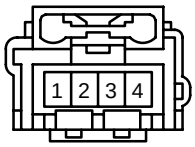

A31
Yellow

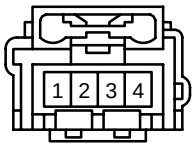

A32

A33

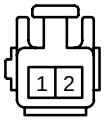

A34

A35
Black

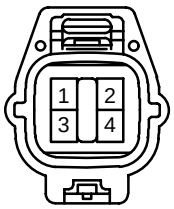

A36
Black

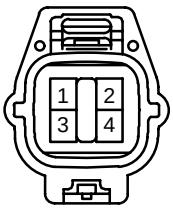

A37
Black

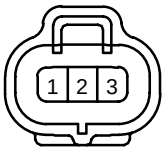

A38
Black

A39
Black

A40
Black

A41
Dark Gray

A42
Dark Gray

A43
Gray

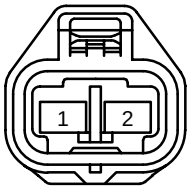

A44
Black

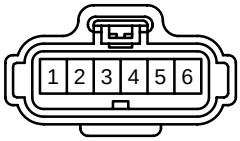

A45
Black

A46
Gray

A47
Black

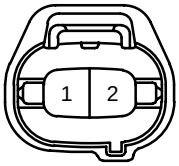

B 1
Gray

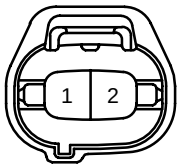

B 2
Black

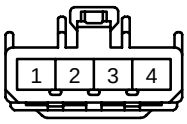

B 3

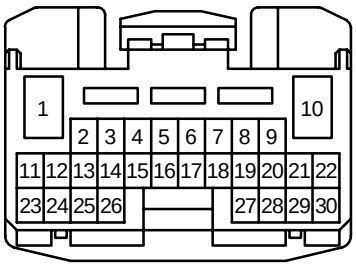

B 4

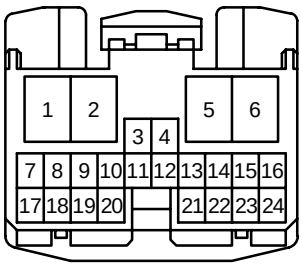

K CONNECTOR LIST

B 5

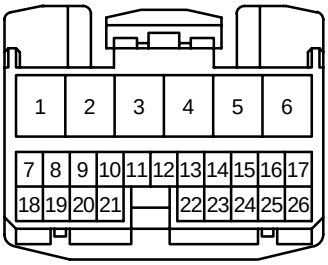

B 6
Black

B 7

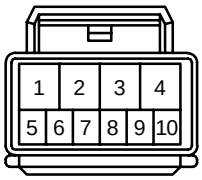

B 8

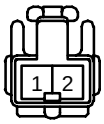

B 9

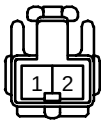

B10
Gray

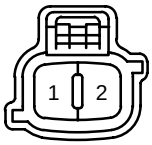

B11
Gray

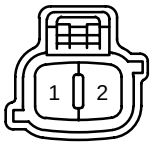

B12
Black

B14

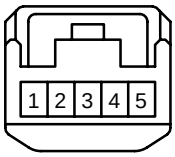

B15

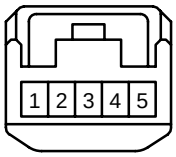

B16

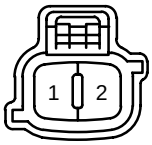

C 1
Gray

C 2
Dark Gray

C 3

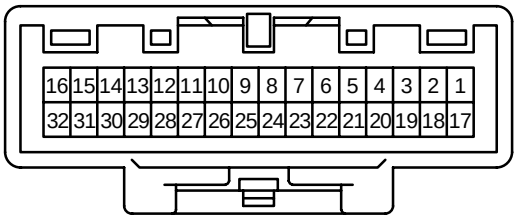

C 4
Gray

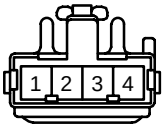

C 5

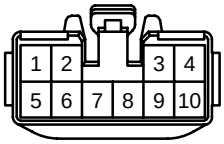

C 6

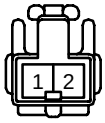

C 7

C 8
Gray

C 9

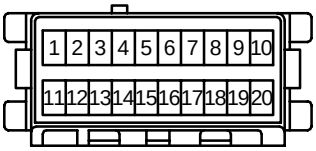

C10

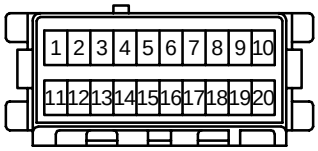

C11

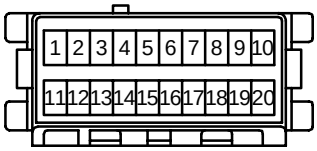

C12

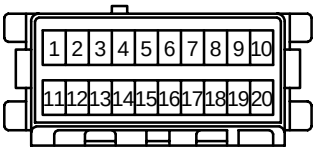

C13
Black

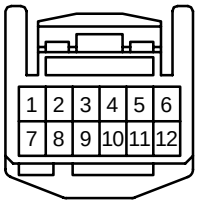

C14

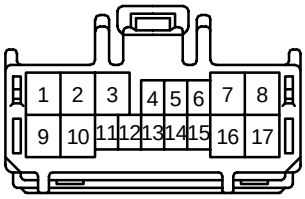

C15
Black

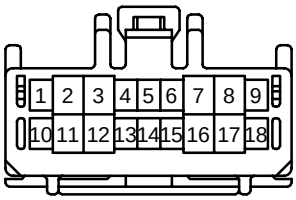

C16
Blue

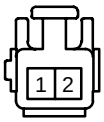

C17
Black

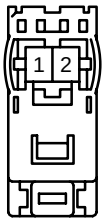

C18
Black

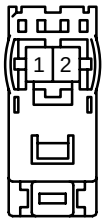

C19
Black

C20
Black

D 1
Blue

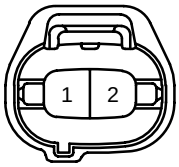

D 2
Gray

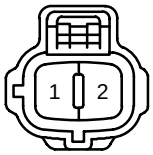

D 3

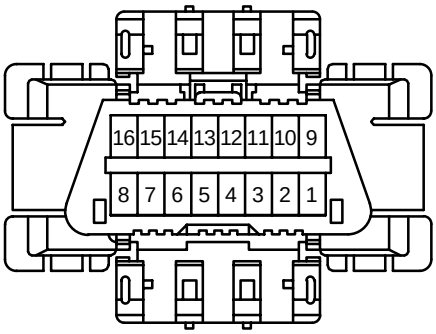

D 4
Gray

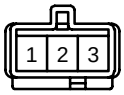

D 5
Blue

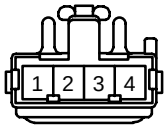

D 6

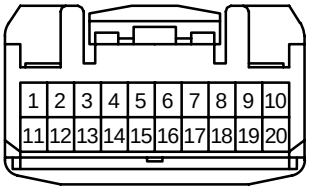

D 7

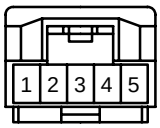

D 8
Gray

D 9
Gray

D10
Gray

D11
Gray

D12
Black

D13
Black

D14
Black

D15
Black

D16

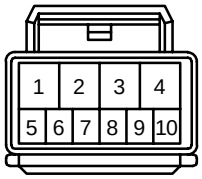

D17

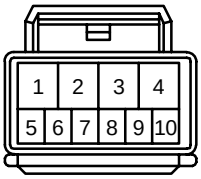

D18

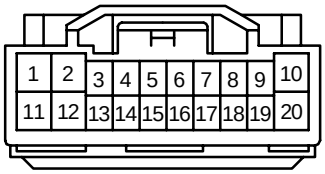

D19

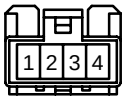

D20

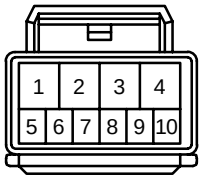

D21

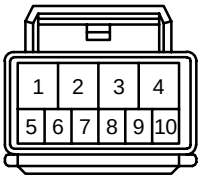

D22
Blue

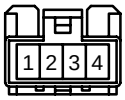

D23
Black

K CONNECTOR LIST

E 1
Gray

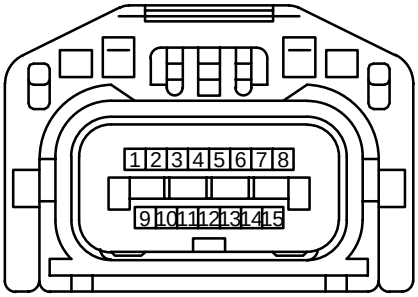

E 2
Dark Gray

E 3
Black

E 4
Gray

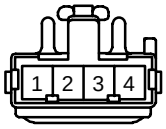

E 5

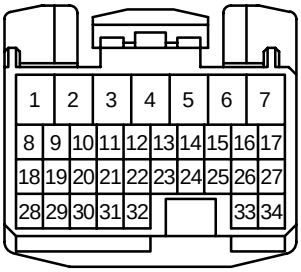

E 6

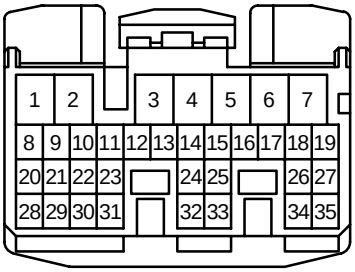

E 7

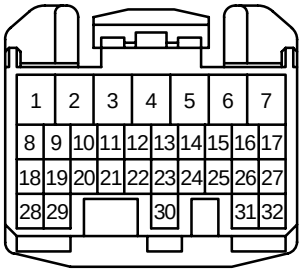

E 8

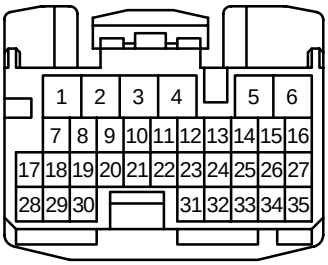

E 9

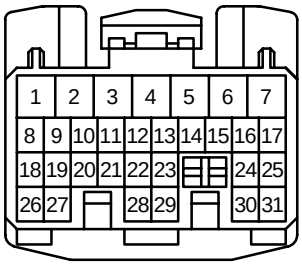

F 1
Gray

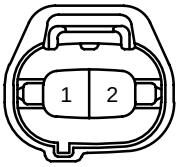

F 2
Gray

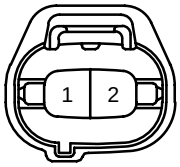

F 3
Gray

F 4
Gray

F 5
Black

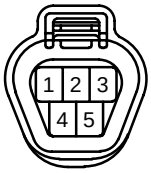

F 6
Dark Gray

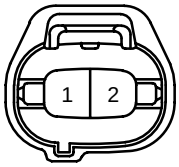

F 7
Black

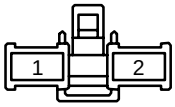

F 9

F10

F11
Black

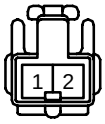

F12
Black

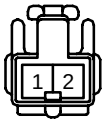

F13

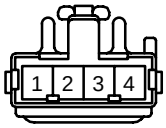

F14

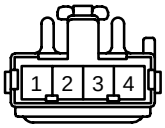

F15

G 1

G 2
Black

G 3
Gray

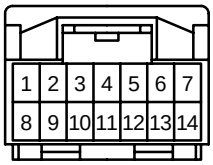

G 4
Black

G 5
Black

H 1
Black

H 2
Black

H 3
Black

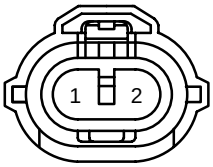

H 4
Black

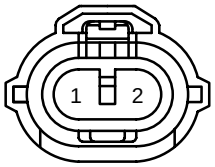

H 6
Dark Gray

H 8
Dark Gray

H 9
Black

H10
Black

H11
Black

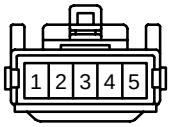

H12

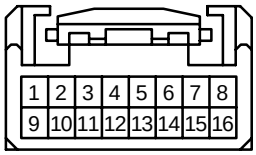

H13
Gray

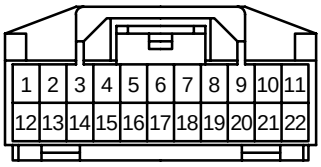

H14

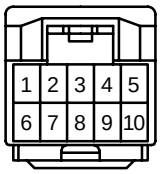

H15
Gray

H16
Black

H17
Black

H18
Black

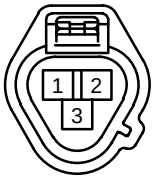

H19

I 1
Black

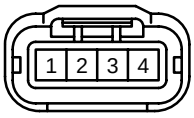

I 2
Black

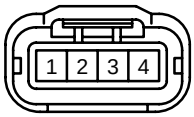

I 3
Black

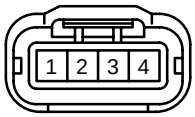

I 4
Black

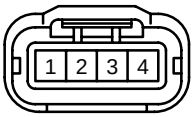

I 5
Black

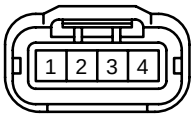

I 6
Black

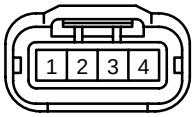

I 7
Black

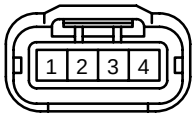

I 8
Black

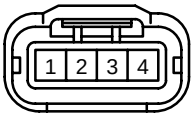

I 9
Gray

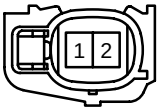

I10
Gray

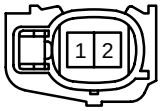

K CONNECTOR LIST

I11
Gray

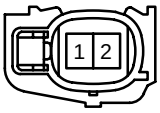

I12
Gray

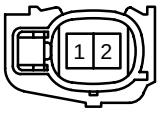

I13
Gray

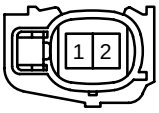

I14
Gray

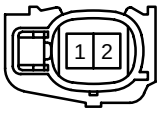

I15
Gray

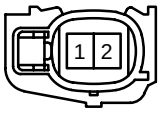

I16
Gray

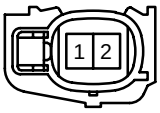

I17
Black

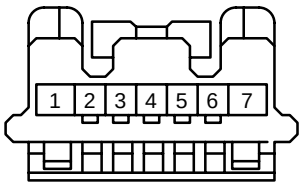

I18

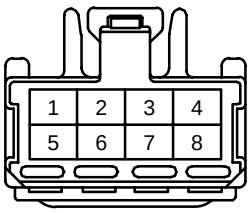

I19
Black

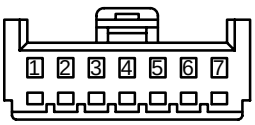

I20

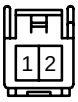

I21

I22

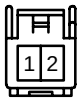

I23

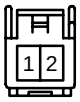

I24

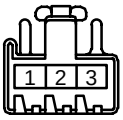

J 1

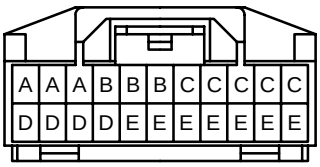

J 2
Blue

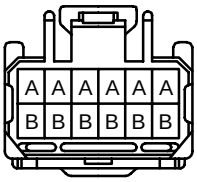

J 3
Blue

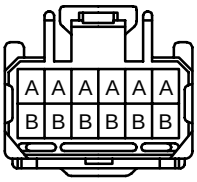

J 4
Dark Gray

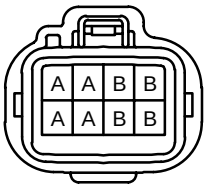

J 5
Dark Gray

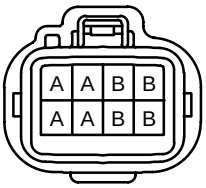

J 6
Dark Gray

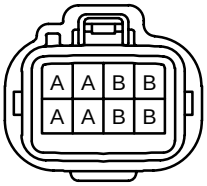

J 7

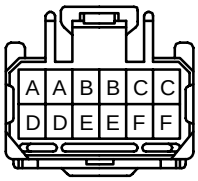

J 8

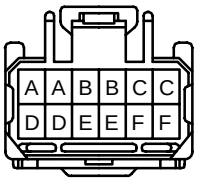

J 9
Black

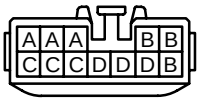

J10
Blue

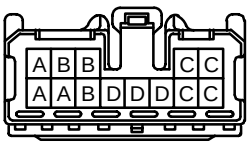

J11

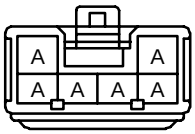

J12
Blue

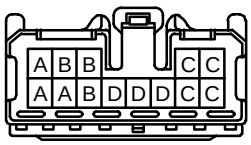

J13

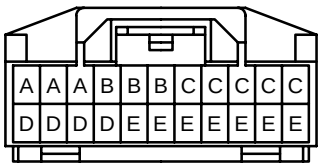

J14

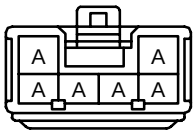

J15
Blue

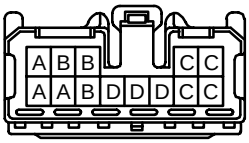

J16

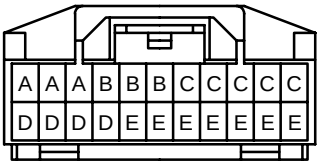

J17
Black

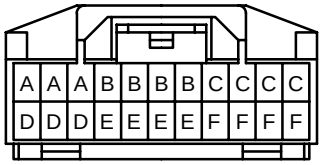

J18
Black

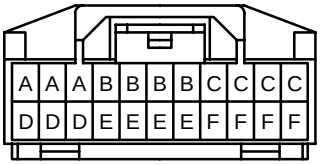

J19
Black

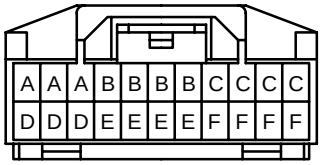

J20
Black

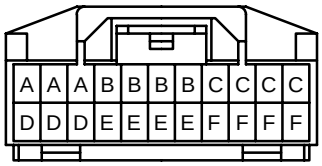

J21
Blue

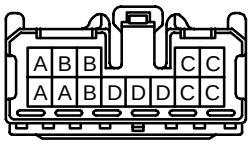

J22

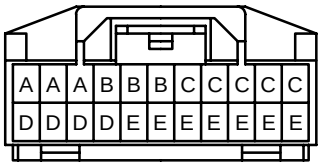

J23

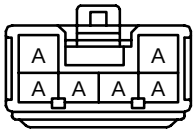

J24

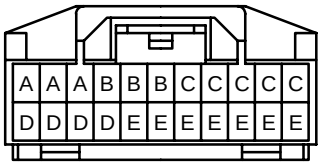

J25

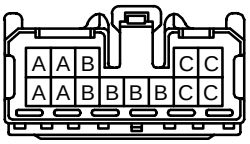

J26

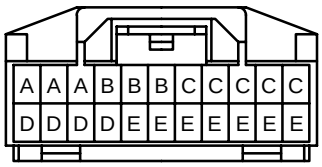

J28

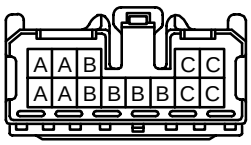

J29

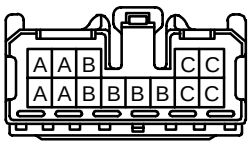

J30

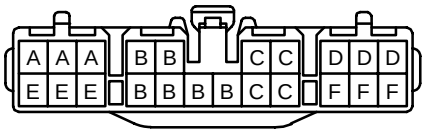

J31

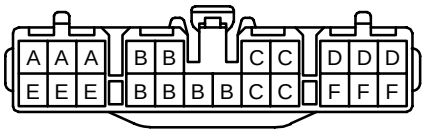

J32

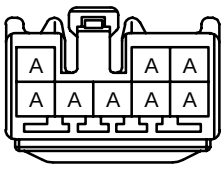

K CONNECTOR LIST

J33

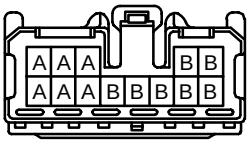

J34

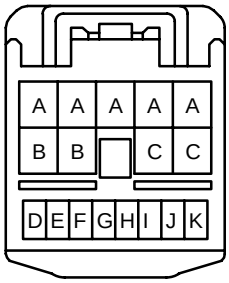

J35

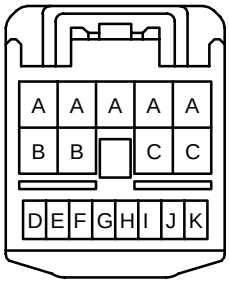

J36

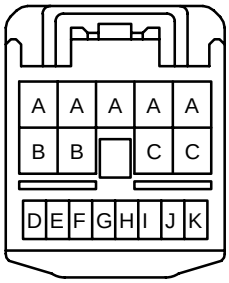

J37

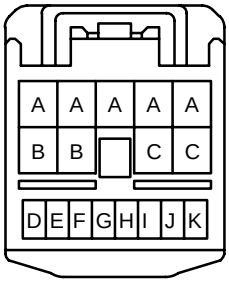

J38

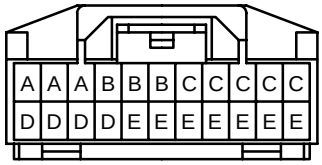

J39

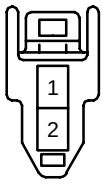

J40

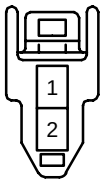

J41

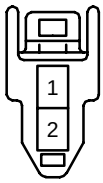

J42

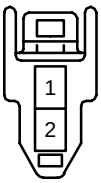

J43

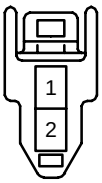

J44

K 1
Black

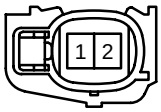

K 2
Gray

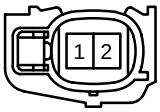

K 3

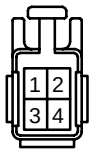

L 1

L 2

L 3
Black

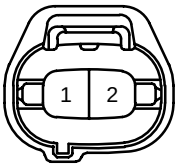

L 4
Black

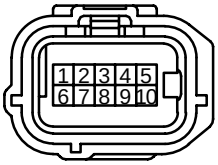

M 1
Black

M 3
Black

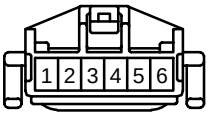

M 4
Black

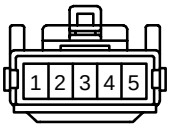

M 5

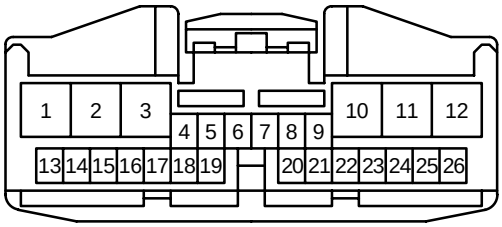

M 6

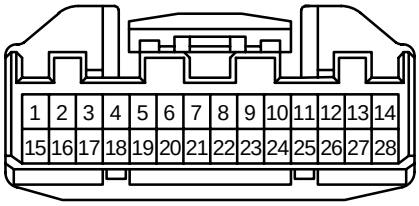

M10

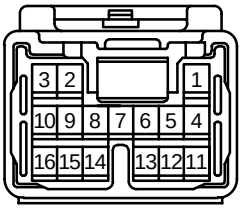

M11

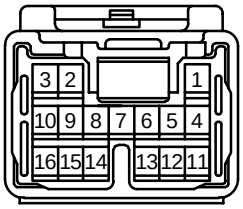

M12

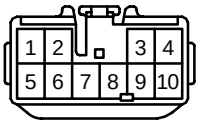

M13

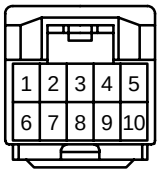

M14

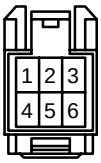

N 1
Gray

N 2
Gray

N 3
Gray

N 4

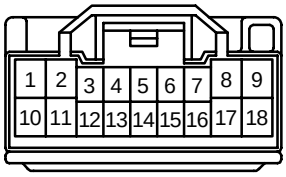

N 5

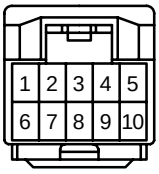

N 6
Black

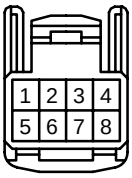

O 1
Gray

O 2

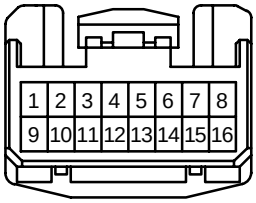

O 3
Black

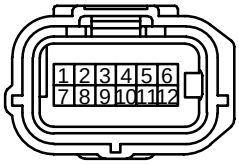

O 4
Gray

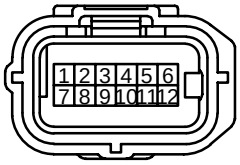

O 5
Black

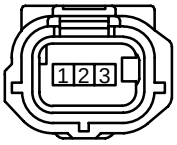

O 6
Gray

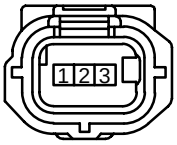

O 7
Gray

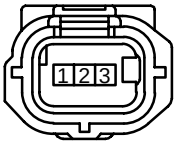

O 8
Black

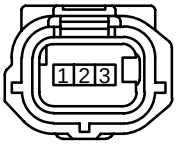

P 1
Gray

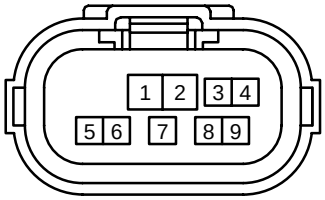

P 2
Gray

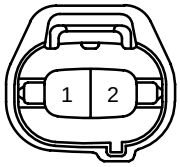

P 3
Dark Gray

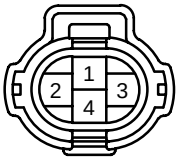

P 4
Black

P 5

P 6
Black

P 7

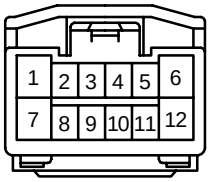

K CONNECTOR LIST

P 8

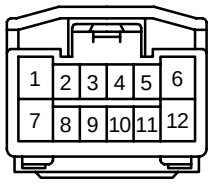

P 9

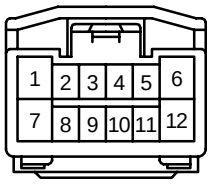

P10
Black

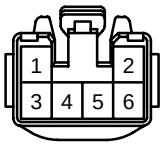

P11
Black

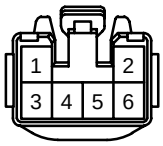

P12
Black

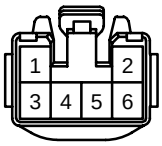

P13
Black

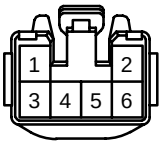

P14
Yellow

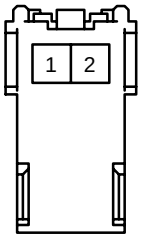

P15
Yellow

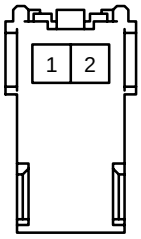

P16

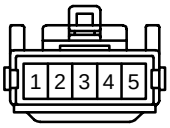

P18
Black

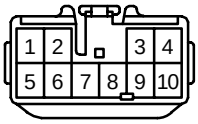

P19

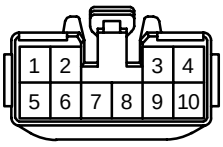

P20

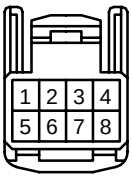

P21
Black

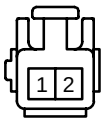

P22
Black

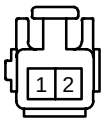

P23
Black

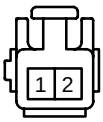

P24
Black

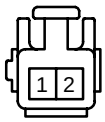

P25
Black

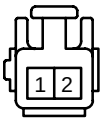

P26

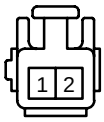

P27

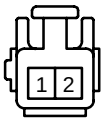

P28

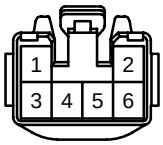

P29

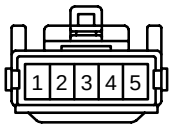

P30
Black

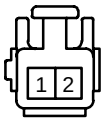

R 1

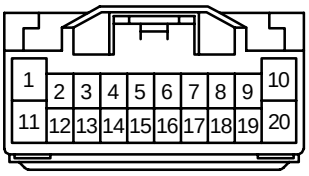

R 2

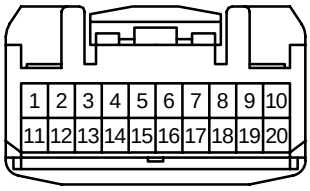

R 3

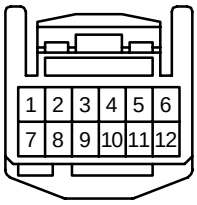

R 4

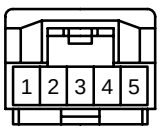

R 5

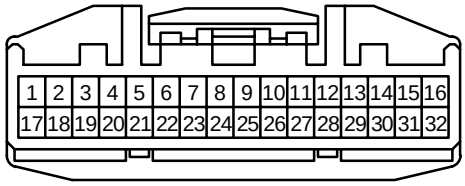

R 6

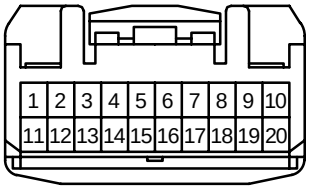

R 7

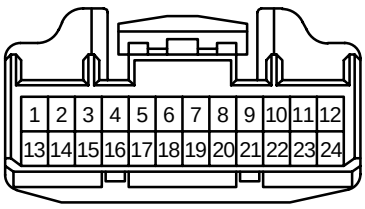

R 8

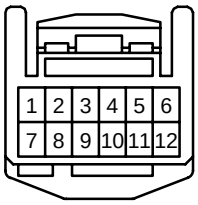

R 9

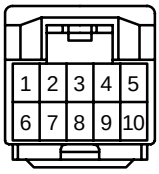

R10

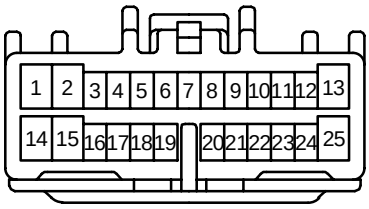

R11

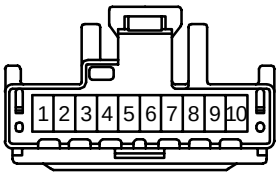

R12

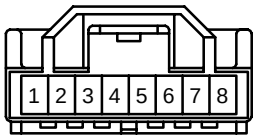

R13
Black

R14
Gray

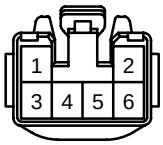

R15
Gray

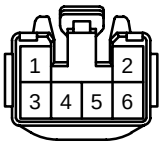

R17
Black

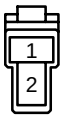

R18
Black

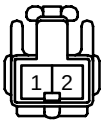

R19
Black

R20

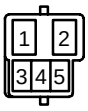

R21

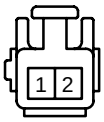

R22

R23

R24
Black

R25

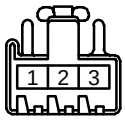

R26

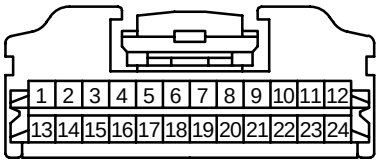

R27

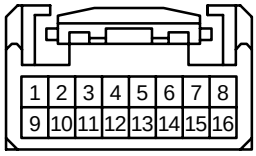

R28
Black

R29

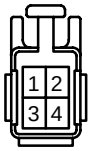

R30
Black

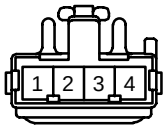

S 1

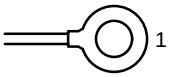

S 2
Black

S 3
Black

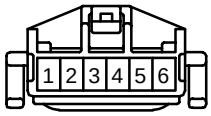

S 4

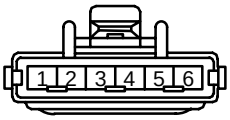

S 5

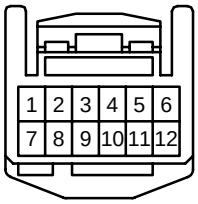

S 6

S 7
Blue

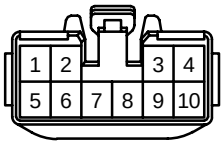

S12

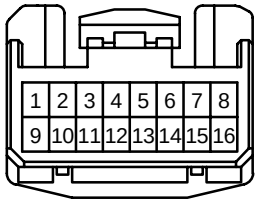

S13

K CONNECTOR LIST

S14

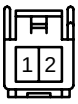

S15

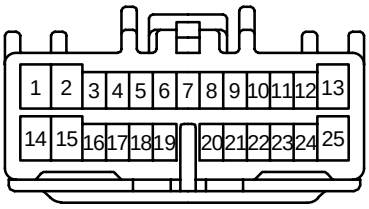

S16

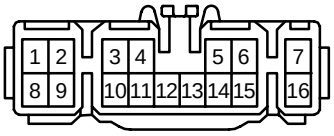

S17
Blue

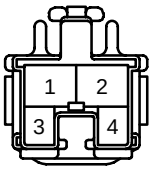

S18

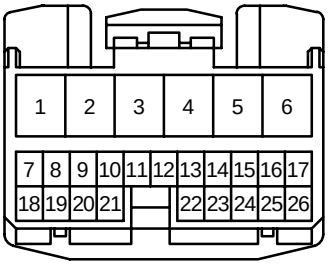

S19

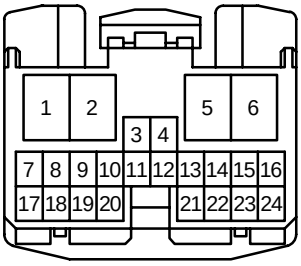

S20

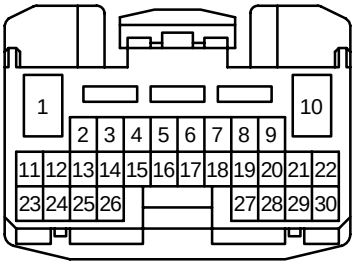

S21
Yellow

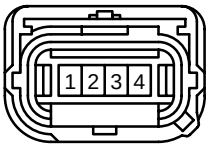

S22
Yellow

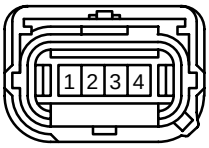

S23
Yellow

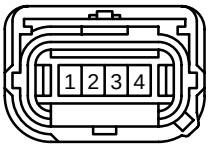

S24
Yellow

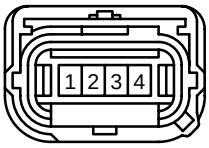

S25

S26

S27

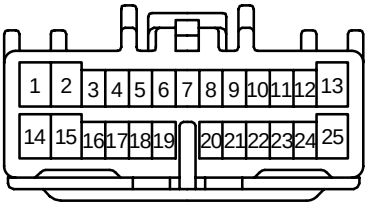

S28

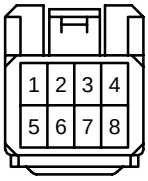

S29

S30

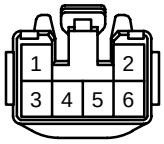

S31
Yellow

S32
Yellow

S33
Black

S34
Black

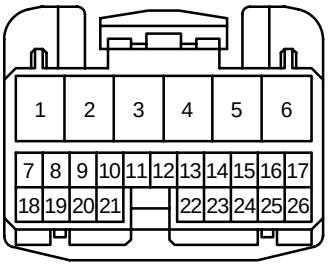

S35
Black

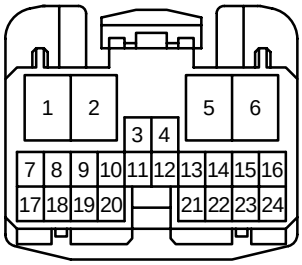

S36

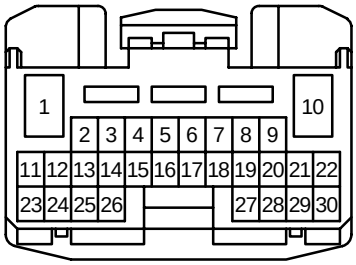

S37
Black

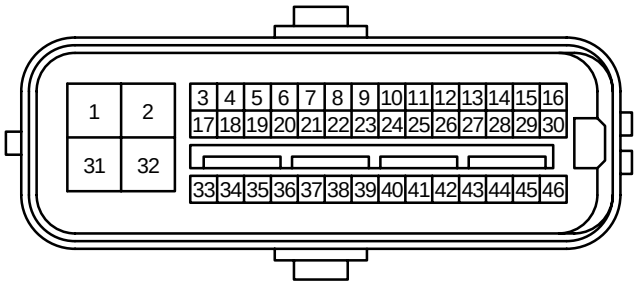

S38
Black

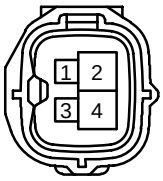

T 1
Black

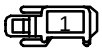

T 2
Black

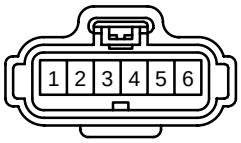

T 3
Black

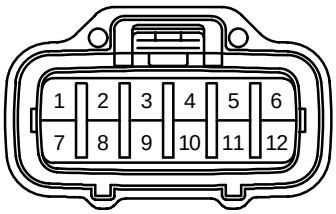

T 4
Black

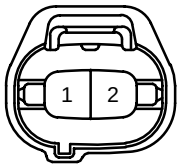

T 5

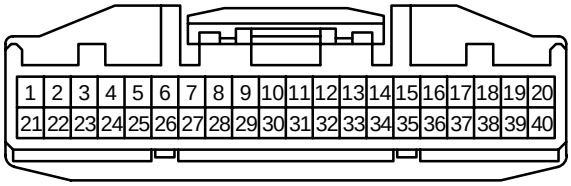

T 6

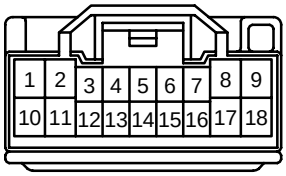

T 7

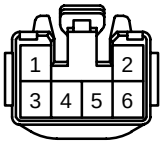

T 8

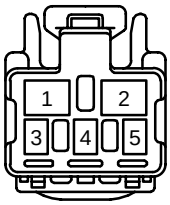

T 9

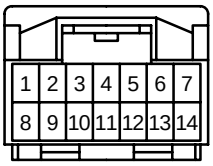

T10

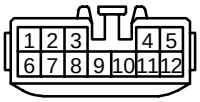

T11
Black

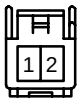

T12
Black

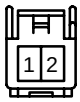

K CONNECTOR LIST

T13

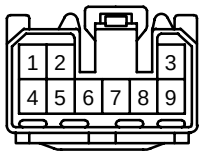

T14
Black

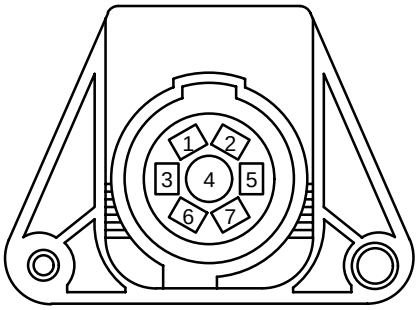

T15

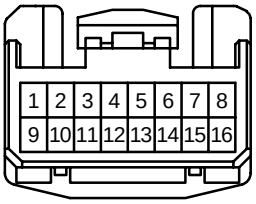

T16
Blue

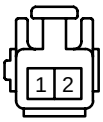

T17

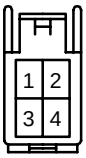

T18
Black

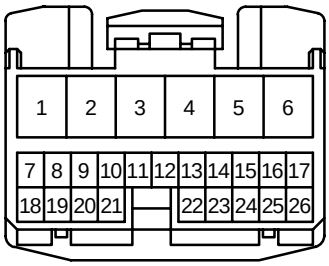

T19

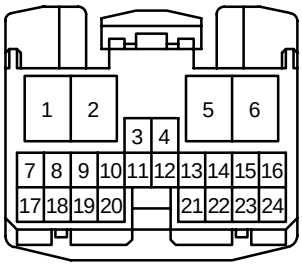

T20

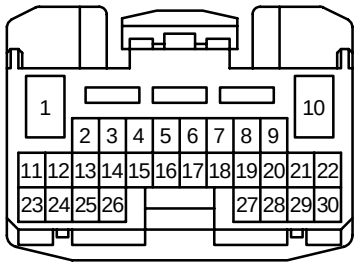

T21

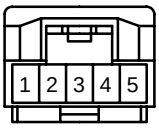

V 1
Black

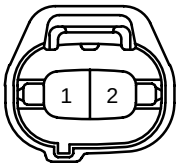

V 2
Black

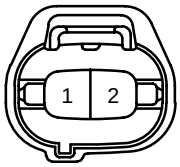

V 3
Black

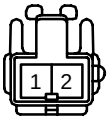

V 4

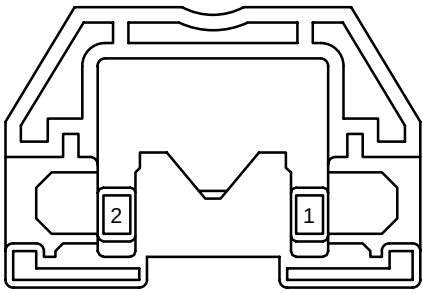

V 5

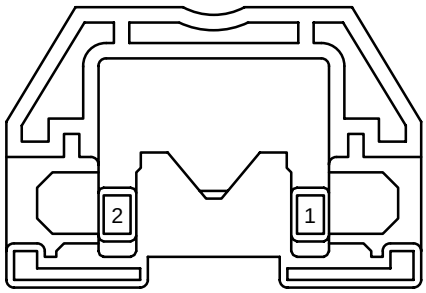

V 7

V 9
Black

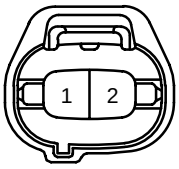

V10
Brown

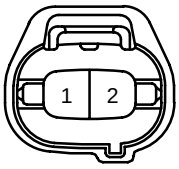

V11
Brown

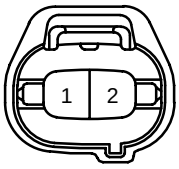

V12
Dark Gray

V13
Dark Gray

W 1
Black

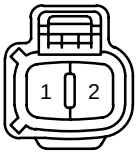

W 2
Dark Gray

W 3
Gray

W 4

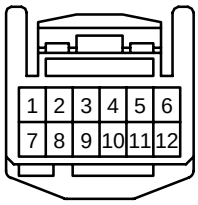

W 5
Blue

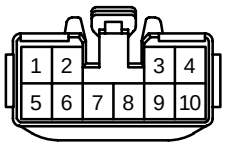

W 6

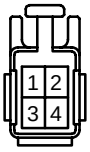

Y 1
Black

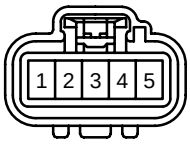

L PART NUMBER OF CONNECTORS

Code	Part Name	Part Number
A 1	A/C Ambient Temp. Sensor	90980–11070
A 2	A/C Condenser Fan Motor	90980–11237
A 3	A/C Lock Sensor	90980–11016
	A/C Magnetic Clutch	
A 7	ABS Speed Sensor Front LH	90980–11003
A 8	ABS Speed Sensor Front RH	
A 9	Absorber Control Actuator Front LH	90980–11929
A10	Absorber Control Actuator Front RH	
A11	Airbag Sensor Front LH	90980–11856
A12	Airbag Sensor Front RH	
A13	A/C Control Assembly (w/o LEXUS Navigation System)	90980–12150
	A/C ECU (w/ LEXUS Navigation System)	
A14	A/C Control Assembly (w/o LEXUS Navigation System)	90980–12149
	A/C ECU (w/ LEXUS Navigation System)	
A15	A/C Control Assembly (w/o LEXUS Navigation System)	90980–12151
	A/C ECU (w/ LEXUS Navigation System)	
A16	A/C Room Temp. Sensor	90980–11918
A17	A/C Solar Sensor	90980–12056
	Automatic Light Control Sensor	
A18	A/C Thermistor	90980–11918
A19	A/T Shift Indicator	90980–11911
A20	Accel Position Sensor	90980–11858
A21	Acceleration Control Sensor Front	90980–10845
A22	Accessory Meter	90980–11911
A23	Air Inlet Control Servo Motor	90980–11909
A24	Air Mix Control Servo Motor LH	
A25	Air Mix Control Servo Motor RH	
A26	Air Vent Mode Control Servo Motor	
A27	Airbag Sensor Assembly	82824–50160
A28	Airbag Sensor Assembly	90980–11872
A29	Airbag Sensor Assembly	82824–50150
A30	Airbag Squib (Front Passenger Airbag Assembly)	90980–12160
A31	Airbag Squib (Steering Wheel Pad)	
A32	Antenna Amplifier	90980–11146
A33	Ashtray Illumination	90980–10825
A34	ABS Speed Sensor Rear	90980–10942
A35	Absorber Control Actuator Rear LH	90980–11930
A36	Absorber Control Actuator Rear RH	
A37	Acceleration Control Sensor Rear	90980–10845
A38	Acceleration Sensor	
A39	Accumulator Pressure Sensor No.1	90980–11451
A40	Accumulator Pressure Sensor No.2	
A41	Air Fuel Ratio Sensor (Bank 1 Sensor 1)	90980–10869
A42	Air Fuel Ratio Sensor (Bank 2 Sensor 1)	

Code	Part Name	Part Number
A43	Air Injection Control Driver	90980–12068
A44	Air Injection Control Driver	90980–11858
A45	Air Pressure Sensor	90980–10845
A46	Air Pump	90980–11032
A47	Air Switching Valve	90980–11149
B 1	Brake Fluid Level Warning SW	90980–11156
B 2	Blower Motor Linear Controller	90980–11676
B 3	Body ECU	90980–12151
B 4	Body ECU	90980–12149
B 5	Body ECU	90980–12150
B 6	Back Door Courtesy SW	90980–10871
B 7	Back Door Key Lock and Unlock SW	90980–12226
	Back Door Lock Motor	
	Back Door Unlock Detection SW	
B 8	Back Door Speaker LH	90980–10860
B 9	Back Door Speaker RH	
B10	Back–Up Light LH	90980–11019
B11	Back–Up Light RH	
B12	Buckle SW LH	90980–10942
	Seat Position Sensor	
B14	Buckle SW LH	90980–12366
B15	Buckle SW RH	
B16	Buckle SW RH	90980–11019
C 1	Camshaft Position Sensor	90980–11016
C 2	Crankshaft Position Sensor	90980–11162
C 3	CD Automatic Changer	90980–12262
C 4	Center Diff. Lock Control SW	90980–11013
C 5	Center Diff. Lock ECU	90980–10801
C 6	Center Speaker	90980–10860
C 7	Cigarette Lighter	90980–10760
C 8	Cigarette Lighter Illumination	90980–11148
C 9	Combination Meter	82824–35030
C10	Combination Meter	82824–35040
C11	Combination Meter	82824–35030
C12	Combination Meter	82824–35040
C13	Combination SW	90980–12183
C14	Combination SW	90980–11672
C15	Combination SW	90980–11594
C16	Console Box Illumination	90980–10825
C17	Curtain Shield Airbag Squib LH	90980–12219
C18	Curtain Shield Airbag Squib RH	
C19	Camshaft Timing Oil Control Valve LH	90980–11162
C20	Camshaft Timing Oil Control Valve RH	
D 1	Detection SW (Transfer L4 Position)	90980–11156
D 2	Detection SW (Transfer Neutral Position)	90980–10923
D 3	Data Link Connector3	90980–11978

Note: Not all of the above part numbers of the connector are established for the supply.

Code	Part Name	Part Number
D 4	Diode (Back–Up Light)	90980–11071
D 5	Downhill Assist Control SW	90980–11013
D 6	DVD Player	90980–12259
D 7	Door Control Receiver	90980–11909
D 8	Door Courtesy Light Front LH	90980–11148
D 9	Door Courtesy Light Front RH	
D10	Door Courtesy Light Rear LH	
D11	Door Courtesy Light Rear RH	
D12	Door Courtesy SW Front LH	90980–10871
D13	Door Courtesy SW Front RH	
D14	Door Courtesy SW Rear LH	
D15	Door Courtesy SW Rear RH	
D16	Door Key Lock and Unlock SW Front LH	90980–12226
	Door Lock Motor Front LH	
	Door Unlock Detection SW Front LH	
D17	Door Key Lock and Unlock SW Front RH	
	Door Lock Motor Front RH	
	Door Unlock Detection SW Front RH	
D18	Door Lock Control SW LH	90980–12166
	Power Window Master SW	
D19	Door Lock Control SW RH	90980–11950
D20	Door Lock Motor Rear LH	90980–12226
	Door Unlock Detection SW Rear LH	
D21	Door Lock Motor Rear RH	
	Door Unlock Detection SW Rear RH	
D22	Driving Position Memory SW	90980–11950
D23	Diode (Rear Interior Light)	90980–10962
E 1	Electronically Controlled Transmission Solenoid	90980–12293
E 2	Engine Coolant Temp. Sensor	90980–10735
E 3	Engine Hood Courtesy SW	90980–10942
E 4	Electronically Controlled Transmission Pattern Select SW	90980–11013
E 5	Engine Control Module	90980–12527
E 6	Engine Control Module	90980–12528
E 7	Engine Control Module	90980–12526
E 8	Engine Control Module	90980–12146
E 9	Engine Control Module	90980–12142
F 1	Front Fog Light LH	90980–11156
F 2	Front Fog Light RH	
F 3	Front Parking Light LH	90980–10942
	Front Side Marker Light LH	
	Front Turn Signal Light LH	
F 4	Front Parking Light RH	
	Front Side Marker Light RH	
	Front Turn Signal Light RH	
F 5	Front Wiper Motor	90980–11599

Code	Part Name	Part Number
F 6	Fuel Pump Resistor	90980–11156
F 7	Front Blower Motor	90980–10385
F 9	Front Door Speaker LH	90980–10935
F10	Front Door Speaker RH	
F11	Front Door Squawker LH	90980–10860
F12	Front Door Squawker RH	
F13	Front Door Tweeter Speaker LH	90980–11013
F14	Front Door Tweeter Speaker RH	
F15	Fuel Pump	90980–11077
	Fuel Sender	
G 1	Generator	90980–09365
G 2	Generator	90980–11964
G 3	Gateway ECU	90980–11911
G 4	Glove Box Light	90980–11148
G 5	Glove Box Light SW	90980–11098
H 1	Headlight High LH	90980–11095
H 2	Headlight High RH	
H 3	Headlight Low LH	82824–60460
H 4	Headlight Low RH	
H 6	Heated Oxygen Sensor (Bank 1 Sensor 2)	90980–11028
H 8	Heated Oxygen Sensor (Bank 2 Sensor 2)	
H 9	Horn (High)	90980–10619
H10	Horn (Low)	
H11	Hazard SW	90980–10789
H12	Headphone Terminal	90980–12156
	Video Terminal	
H13	Heater Control SW	90980–11915
H14	Height Control and Suspension SW	90980–11923
H15	Height Control Compressor	90980–10990
H16	Height Control Exhaust Valve	90980–11859
H17	Height Control Sensor Rear LH	90980–11016
H18	Height Control Sensor Rear RH	
H19	High Mounted Stop Light	90980–11003
I 1	Ignition Coil and Igniter No.1	90980–11885
I 2	Ignition Coil and Igniter No.2	
I 3	Ignition Coil and Igniter No.3	
I 4	Ignition Coil and Igniter No.4	
I 5	Ignition Coil and Igniter No.5	
I 6	Ignition Coil and Igniter No.6	
I 7	Ignition Coil and Igniter No.7	
I 8	Ignition Coil and Igniter No.8	
I 9	Injector No.1	90980–11875
I10	Injector No.2	
I11	Injector No.3	
I12	Injector No.4	
I13	Injector No.5	

L PART NUMBER OF CONNECTORS

Code	Part Name	Part Number
I14	Injector No.6	90980–11875
I15	Injector No.7	
I16	Injector No.8	
I17	Ignition Key Cylinder Light	90980–12092
	Transponder Key Amplifier	
I18	Ignition SW	90980–11615
I19	Inner Mirror	90980–11794
I20	Inside Handle Illumination Front LH	90980–12063
I21	Inside Handle Illumination Front RH	
I22	Inside Handle Illumination Rear LH	
I23	Inside Handle Illumination Rear RH	
I24	Interior Light	90980–12321
J 1	Junction Connector	90980–11915
J 2	Junction Connector	90980–11661
J 3	Junction Connector	
J 4	Junction Connector	90980–10891
J 5	Junction Connector	
J 6	Junction Connector	
J 7	Junction Connector	90980–11661
J 8	Junction Connector	
J 9	Junction Connector	90980–10803
J10	Junction Connector	90980–11542
J11	Junction Connector	90980–10976
J12	Junction Connector	90980–11542
J13	Junction Connector	90980–11915
J14	Junction Connector	90980–10976
J15	Junction Connector	90980–11542
J16	Junction Connector	90980–11915
J17	Junction Connector	
J18	Junction Connector	
J19	Junction Connector	
J20	Junction Connector	
J21	Junction Connector	90980–11542
J22	Junction Connector	90980–11915
J23	Junction Connector	90980–10976
J24	Junction Connector	90980–11915
J25	Junction Connector	90980–11542
J26	Junction Connector	90980–11915
J28	Junction Connector	90980–11542
J29	Junction Connector	
J30	Junction Connector	90980–11238
J31	Junction Connector	
J32	Junction Connector	90980–11686
J33	Junction Connector	90980–11542

Code	Part Name	Part Number
J34	Junction Connector	90980–12374
J35	Junction Connector	
J36	Junction Connector	
J37	Junction Connector	
J38	Junction Connector	90980–11915
J39	Junction Connector	90980–12355
J40	Junction Connector	
J41	Junction Connector	
J42	Junction Connector	
J43	Junction Connector	
J44	Junction Connector	90980–10871
K 1	Knock Sensor (Bank 1)	90980–11875
K 2	Knock Sensor (Bank 2)	
K 3	Key Interlock Solenoid	90980–10795
	Unlock Warning SW	
L 1	License Plate Light LH	90980–11148
L 2	License Plate Light RH	
L 3	Low Pressure Tank Valve	90980–11156
L 4	Leak Detection Pump Assembly	90980–12380
M 1	Mass Air Flow Meter	90980–12292
M 3	Main SW	90980–10964
M 4	Mirror Heater SW	90980–10789
M 5	Multi–Display	90980–12203
M 6	Multi–Display	90980–12410
M10	Mirror Heater LH	90980–11573
	Remote Control Mirror LH	
M11	Mirror Heater RH	
	Remote Control Mirror RH	
M12	Moon Roof Control ECU and Motor	90980–10997
M13	Coin Box Illumination	90980–11923
	Moon Roof Control SW	
	Personal Light	
M14	Multi–Display	90980–12012
N 1	Noise Filter No.1	90980–10843
N 2	Noise Filter No.2	
N 3	Noise Filter (Condenser Fan)	
N 4	Navigation ECU	90980–11973
N 5	Navigation ECU	90980–11923
N 6	Navigation ECU	90980–12221
O 1	Oil Pressure SW	90980–11363
O 2	Overhead J/B	90980–12155
O 3	Occupant Classification ECU	90980–12356
O 4	Occupant Classification ECU	90980–12357
O 5	Occupant Detection Sensor Front LH	90980–12353

Note: Not all of the above part numbers of the connector are established for the supply.

Code	Part Name	Part Number
O 6	Occupant Detection Sensor Front RH	90980–12354
O 7	Occupant Detection Sensor Rear LH	
O 8	Occupant Detection Sensor Rear RH	90980–12353
P 1	Park/Neutral Position SW	90980–12362
P 2	Pressure SW	90980–11149
P 3	Pressure SW	90980–10943
P 4	Parking Brake SW	90980–10871
P 5	Power Outlet (Front)	90980–10760
P 6	Power Outlet (115V)	90980–10601
P 7	Power Window Control SW Front RH	90980–11947
P 8	Power Window Control SW Rear LH	
P 9	Power Window Control SW Rear RH	
P10	Power Window Motor Front LH	90980–10797
P11	Power Window Motor Front RH	
P12	Power Window Motor Rear LH	
P13	Power Window Motor Rear RH	
P14	Pretensioner LH	90980–12253
P15	Pretensioner RH	
P16	Power Seat Control SW (Driver's Seat Lumbar Support Control)	90980–10789
P18	Power Seat Control SW (Front Passenger's Seat)	90980–10997
P19	Power Seat ECU and SW	90980–10801
P20	Power Seat ECU and SW	90980–12221
P21	Power Seat Motor (Driver's Seat Front Vertical Control)	90980–10825
P22	Power Seat Motor (Driver's Seat Lifter Control)	
P23	Power Seat Motor (Driver's Seat Lumbar Support Control)	
P24	Power Seat Motor (Driver's Seat Reclining Control)	
P25	Power Seat Motor (Driver's Seat Slide Control)	
P26	Power Seat Motor (Front Passenger's Seat Reclining Control)	
P27	Power Seat Motor (Front Passenger's Seat Slide Control)	
P28	Passenger Airbag ON–OFF Indicator	90980–10797
	Passenger Seat Belt Warning Light	
P29	Power Seat Control SW (Front Passenger's Seat Lumbar Support Control)	90980–10789
P30	Power Seat Motor (Front Passenger's Seat Lumbar Support Control)	90980–10825
R 1	Radio and Player	90980–12038
R 2	Radio and Player	90980–12259
R 3	Radio and Player	90980–12183
R 4	Rear Cooler SW	90980–11909
R 5	Rear Seat Entertainment ECU	90980–12153
R 6	Rear Seat Entertainment ECU	90980–12259

Code	Part Name	Part Number
R 7	Rear Seat Entertainment ECU	90980–12200
R 8	Rear Seat Entertainment ECU	90980–12183
R 9	Rear Seat Entertainment ECU	90980–11923
R10	Remote Control Mirror ECU	90980–11877
R11	Remote Control Mirror SW	90980–11657
R12	Rheostat	90980–11989
R13	Rain Sensor	90980–11987
R14	Rear Combination Light LH	90980–10797
R15	Rear Combination Light RH	
R17	Rear Cooler Blower Motor	90980–10214
R18	Rear Cooler Magnetic Valve	90980–10860
R19	Rear Cooler Power Transistor	90980–10171
R20	Rear Cooler Relay	90980–10713
R21	Rear Cooler Thermistor	90980–10825
R22	Rear Door Speaker LH	90980–10935
R23	Rear Door Speaker RH	
R24	Rear Height Control Valve	90980–11143
R25	Rear Interior Light	90980–12321
R26	Rear Seat Audio Controller	90980–12267
R27	Rear Seat Entertainment Display	90980–12156
R28	Rear Window Defogger	90980–10870
R29	Rear Wiper Motor	90980–10795
R30	Roll Sensing Curtain Shield Airbag Cut Off SW	90980–11013
S 1	Starter	90980–09585
S 2	Starter	90980–11400
S 3	Seat Heater SW Front LH	90980–10964
S 4	Seat Heater SW Front RH	90980–10933
S 5	Shift Lock Control ECU	90980–12183
	Transmission Control SW	
S 6	Short Pin	90980–10800
S 7	Short Pin	90980–10801
S12	Steering Sensor	90980–12155
S13	Step Light LH	90980–12063
S14	Step Light RH	
S15	Stereo Component Amplifier	90980–11877
S16	Stereo Component Amplifier	90980–10848
S17	Stop Light SW	90980–11118
S18	Suspension Control ECU	90980–12150
S19	Suspension Control ECU	90980–12149
S20	Suspension Control ECU	90980–12151
S21	Side Airbag Sensor Front LH	90980–12225
S22	Side Airbag Sensor Front RH	
S23	Side Airbag Sensor Rear LH	
S24	Side Airbag Sensor Rear RH	

L PART NUMBER OF CONNECTORS

Code	Part Name	Part Number
S25	Side Step Light LH	90980–11075
S26	Side Step Light RH	
S27	Sub Body ECU	90980–11877
S28	Sub Body ECU	90980–12113
S29	Seat Heater (Driver's Seat)	90980–10797
S30	Seat Heater (Front Passenger's Seat)	
S31	Side Airbag Squib LH	90980–11864
S32	Side Airbag Squib RH	
S33	Stabilizer Control Valve	90980–11150
S34	Stabilizer Control ECU	82824–48140
S35	Stabilizer Control ECU	82824–48130
S36	Stabilizer Control ECU	90980–12151
S37	Skid Control ECU with Actuator	90980–12297
S38	Skid Control ECU with Actuator	90980–12294
T 1	Theft Deterrent Horn	90980–10619
T 2	Throttle Control Motor	90980–11858
	Throttle Position Sensor	
T 3	Transfer Actuator	90980–11664
T 4	Turbine Speed Sensor	90980–11156
T 5	Theft Deterrent ECU	90980–12169
T 6	Tilt and Telescopic ECU	90980–11973
T 7	Tilt Motor	90980–10797
T 8	Towing Brake Controller	90980–11603
T 9	Transponder Key Computer	90980–11911
T10	Turn Signal Flasher	90980–10803
T11	Tension Reducer Solenoid LH	90980–12063
T12	Tension Reducer Solenoid RH	
T13	Towing Converter Relay	90980–11535
T14	Trailer Socket	82824–34030
T15	Tire Pressure Monitor ECU	90980–12155
T16	Tire Select SW	90980–10825
T17	Television Camera	90980–12211
T18	Television Camera ECU	90980–12150
T19	Television Camera ECU	90980–12149
T20	Television Camera ECU	90980–12151
T21	Tire Pressure Receiver	90980–11909
V 1	Vehicle Speed Sensor (Electronically Controlled Transmission)	90980–11156
V 2	VSV (EVAP)	
V 3	VSC Warning Buzzer	90980–10906
V 4	Vanity Light LH	90980–12322
V 5	Vanity Light RH	
V 7	Voltage Inverter	90980–10799
V 9	VSV (ACIS)	90980–11156
V10	VSV (Air Switching Valve Bank 1)	90980–11149
V11	VSV (Air Switching Valve Bank 2)	

Code	Part Name	Part Number
V12	VVT Sensor LH	90980–10947
V13	VVT Sensor RH	
W 1	Washer Level Sensor	90980–11068
W 2	Washer Motor	90980–11028
W 3	Wireless Door Lock Buzzer	90980–11142
W 4	Wiper Relay	90980–12183
W 5	Wiper Relay	90980–10801
W 6	Woofer Speaker	90980–10795
Y 1	Yaw Rate Sensor	90980–11904

Note: Not all of the above part numbers of the connector are established for the supply.

Code	Part Name	Part Number	Code	Part Name	Part Number

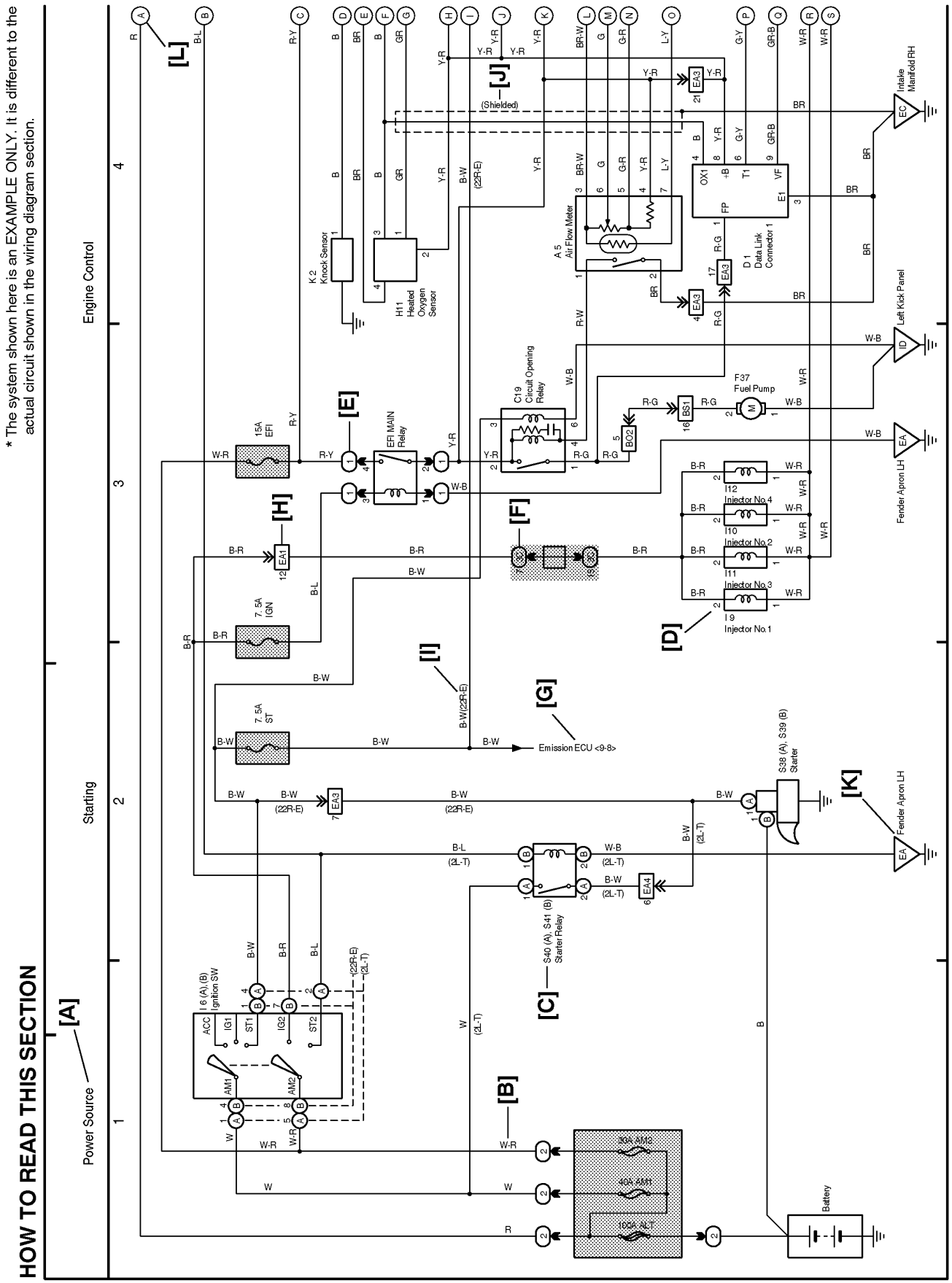
HOW TO READ THIS SECTION
* The system shown here is an EXAMPLE ONLY. It is different to the actual circuit shown in the wiring diagram section.
Power Source
Starting
Engine Control
[A]
[B]
[C]
[D]
[E]
[F]
[G]
[H]
[I]
[J]
[K]
[L]
K 2 Knock Sensor
H11 Heated Oxygen Sensor
A 5 Air Flow Meter
D 1 Data Link Connector 1
C19 Circuit Opening Relay
F37 Fuel Pump
EFI MAIN Relay
15A EFI
7.5A IGN
7.5A ST
I12 Injector No.4
I10 Injector No.2
I11 Injector No.3
I9 Injector No.1
Emission ECU <9-8>
S38 (A), S39 (B) Starter
S40 (A), S41 (B) Starter Relay
I6 (A), (B) Ignition SW
30A AM2
40A AM1
100A ALT
Battery
Intake Manifold RH
Left Kick Panel
Fender Apron LH
(Shielded)

[A] : System Title

[B] : Indicates the wiring color.

Wire colors are indicated by an alphabetical code.

B	=	Black	W	=	White	BR	=	Brown
L	=	Blue	V	=	Violet	SB	=	Sky Blue
R	=	Red	G	=	Green	LG	=	Light Green
P	=	Pink	Y	=	Yellow	GR	=	Gray
O	=	Orange						

The first letter indicates the basic wire color and the second letter indicates the color of the stripe.

Example: L – Y

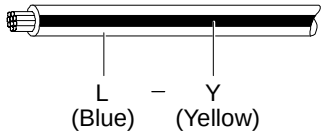

[C] : The position of the parts is the same as shown in the wiring diagram and wire routing.

[D] : Indicates the pin number of the connector. The numbering system is different for female and male connectors.

Example : Numbered in order from upper left to lower right / Numbered in order from upper right to lower left

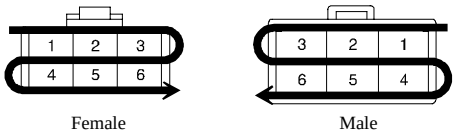

The numbering system for the overall wiring diagram is the same as above

[E] : Indicates a Relay Block. No shading is used and only the Relay Block No. is shown to distinguish it from the J/B.

Example : (1) Indicates Relay Block No.1

[F] : Junction Block (The number in the circle is the J/B No. and the connector code is shown beside it). Junction Blocks are shaded to clearly separate them from other parts.

Example:

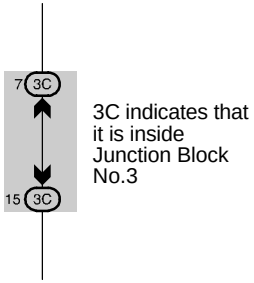

[G] : Indicates related system.

[H] : Indicates the wiring harness and wiring harness connector. The wiring harness with male terminal is shown with arrows (⩔). Outside numerals are pin numbers.

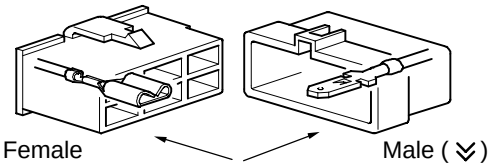

[I] : ( ) is used to indicate different wiring and connector, etc. when the vehicle model, engine type, or specification is different.

[J] : Indicates a shielded cable.

[K] : Indicates and located on ground point.

[L] : The same code occuring on the next page indicates that the wire harness is continuous.

SYSTEM INDEX

SYSTEMS	LOCATION
ABS	15–2
Accessory Meter	31–2
Air Conditioning	38–2
Audio System (w/ Rear Seat Entertainment System)	35–2
Audio System (w/o Rear Seat Entertainment System)	36–2
Automatic Glare–Resistant EC Mirror with Compass	27–2
Back–Up Light	13–2
Center Differential Lock	18–2
Charging	4–2
Cigarette Lighter	25–3
Combination Meter	37–2
Condenser Fan	38–1
Cruise Control	7–2
Downhill Assist Control	15–2
Electric Modulated Air Suspension	16–2
Electric Tension Reducer	27–3
Electronically Controlled Transmission and A/T Indicator	6–2
Engine Control	5–3
Engine Immobilizer System	5–25
Front Fog Light	12–2
Front Wiper and Washer (w/ Rain Sensor)	19–2
Front Wiper and Washer (w/o Rain Sensor)	20–2
Hill–Start Assist Control	15–2
Horn	25–2
Ignition	3–2
Illumination	8–2
Kinetic Dynamic Suspension System	39–2
LEXUS Navigation System with Rear Seat Entertainment System	33–2
LEXUS Navigation System without Rear Seat Entertainment System	34–2
LEXUS Parking Assist (Rear View Monitor) with Rear Seat Entertainment System	33–2
LEXUS Parking Assist (Rear View Monitor) without Rear Seat Entertainment System	34–2

SYSTEMS	LOCATION
Mirror Heater	23–2
Moon Roof	21–2
Multiplex Communication System (BEAN)	1–4
∗ Automatic Light Control	
∗ Door Lock Control	
∗ Garage Door Opener	
∗ Headlight	
∗ Interior Light	
∗ Key Reminder	
∗ Light Auto Turn Off System	
∗ Power Window	
∗ Rear Wiper and Washer	
∗ Theft Deterrent	
∗ Wireless Door Lock Control	
Multiplex Communication System (CAN)	15–11
Power Outlet (115V)	26–2
Power Outlet (12V)	25–4
Power Seat (Driver's Seat)	28–2
Power Seat (Front Passenger's Seat)	29–2
Power Source	1~40–1
Power Tilt and Power Telescopic	17–2
Rear Air Conditioning	38–14
Rear Window Defogger	24–2
Remote Control Mirror	22–2
Seat Belt Warning	32–2
Seat Heater	30–3
Shift Lock	24–4
SRS	14–2
Starting	2–2
Stop Light	11–2
Taillight	8–2
Tire Pressure Warning System	40–2
TRAC	15–2
Trailer Towing	9–2
Turn Signal and Hazard Warning Light	10–2
VSC	15–2

(Cont. next page)

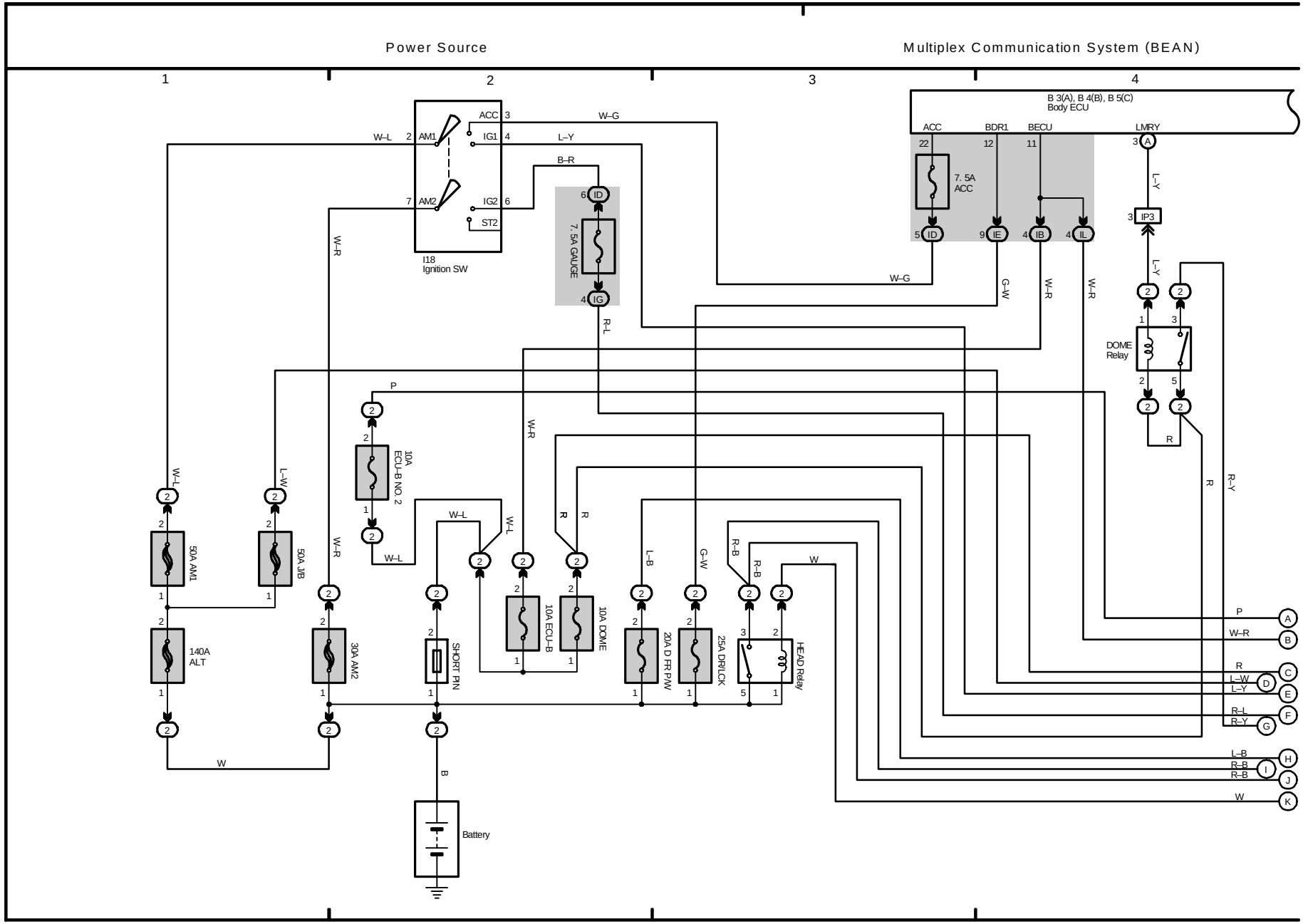

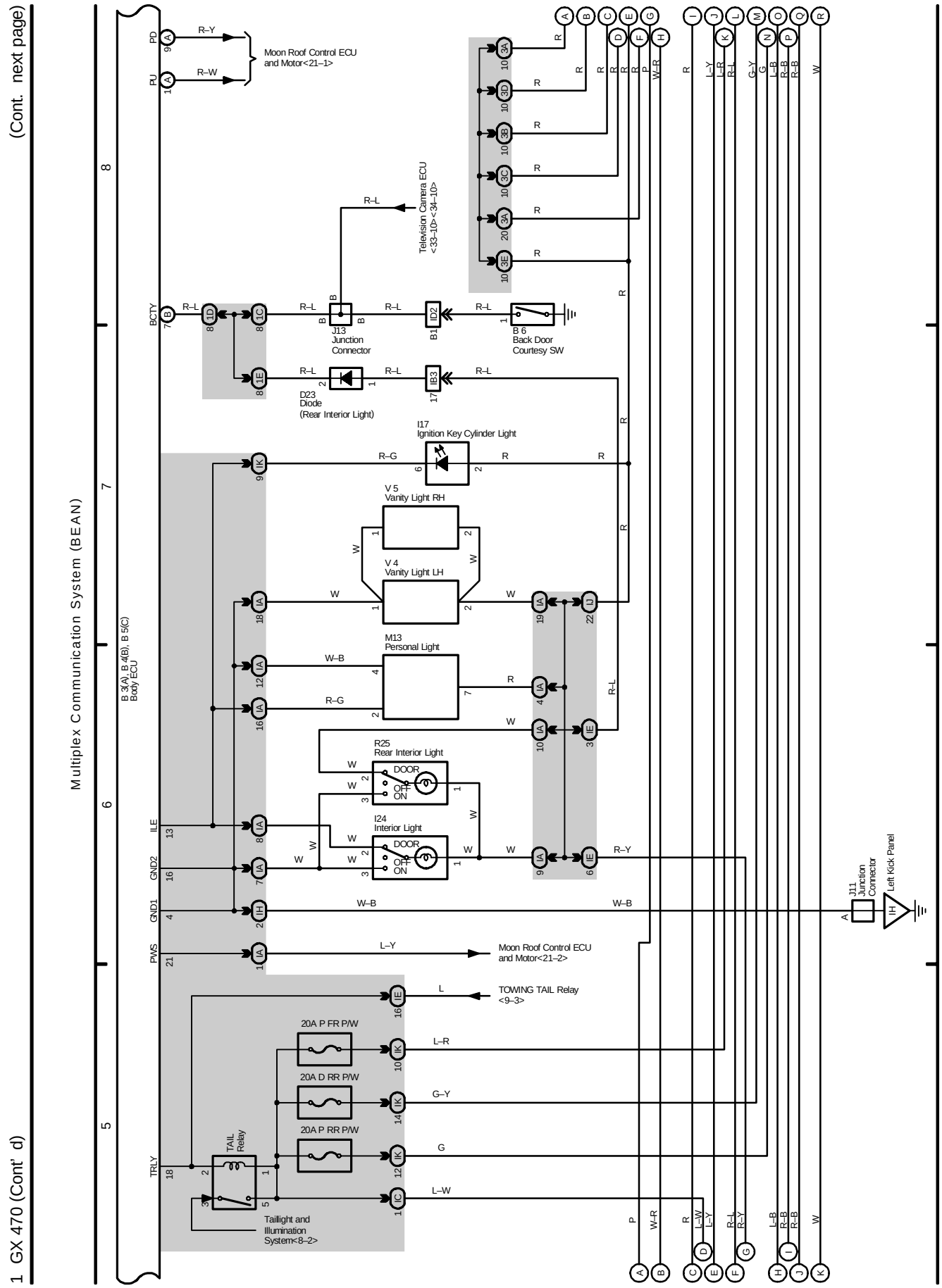
(Cont. next page)
1 GX 470 (Cont' d)
Multiplex Communication System (BEAN)
B 3(A), B 4(B), B 5(C)
Body ECU
Moon Roof Control ECU
and Motor<21–1>
Moon Roof Control ECU
and Motor<21–2>
Television Camera ECU
<33–10><34–10>
J13
Junction
Connector
B 6
Back Door
Courtesy SW
D23
Diode
(Rear Interior Light)
I17
Ignition Key Cylinder Light
V 5
Vanity Light RH
V 4
Vanity Light LH
M13
Personal Light
R25
Rear Interior Light
I24
Interior Light
DOOR
OFF
ON
J11
Junction
Connector
Left Kick Panel
TOWING TAIL Relay
<9–3>
20A P FR P/W
20A D RR P/W
20A P RR P/W
TAIL
Relay
Taillight and
Illumination
System<8–2>

(Cont. next page)

Multiplex Communication System (BEAN)

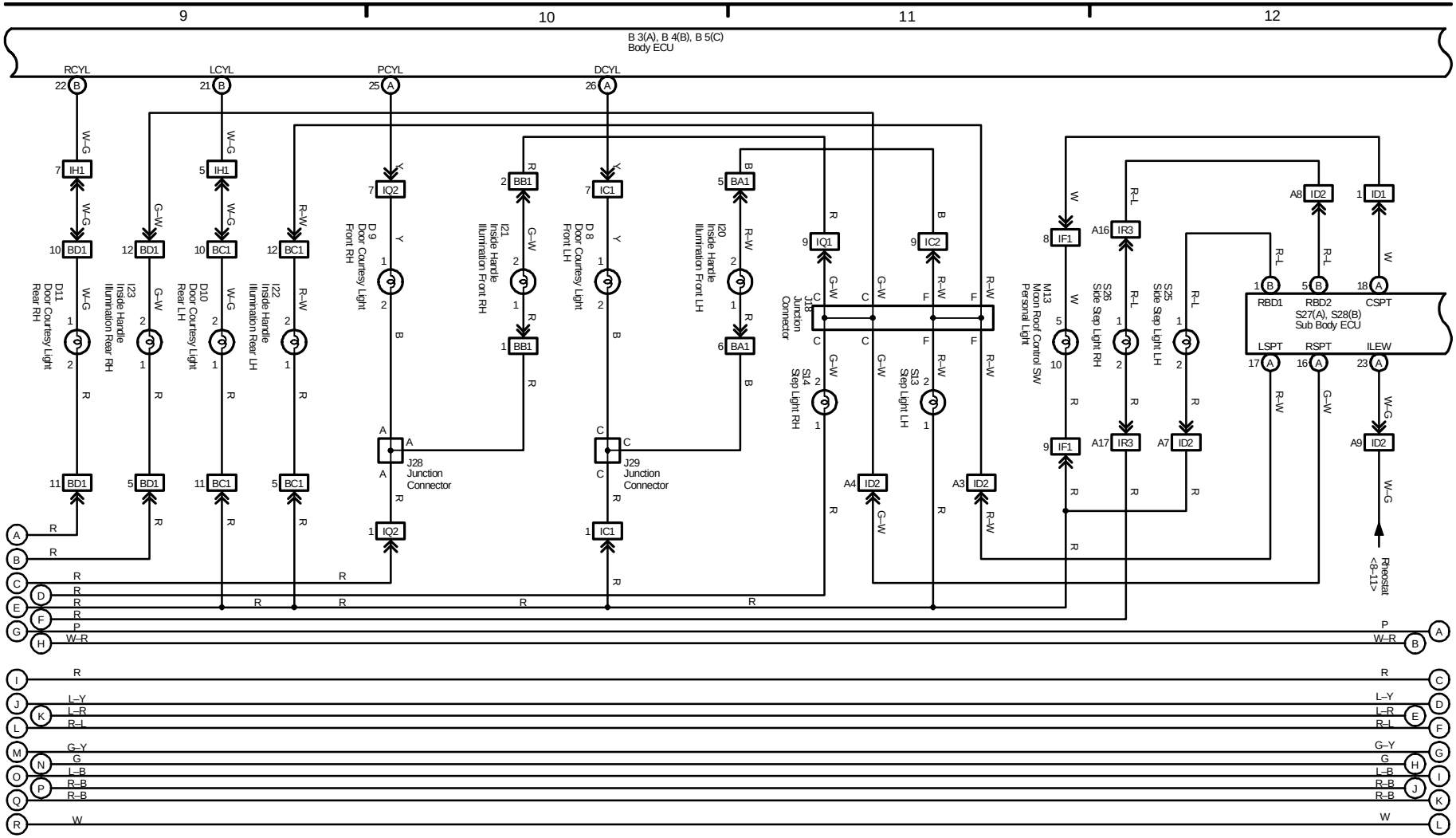

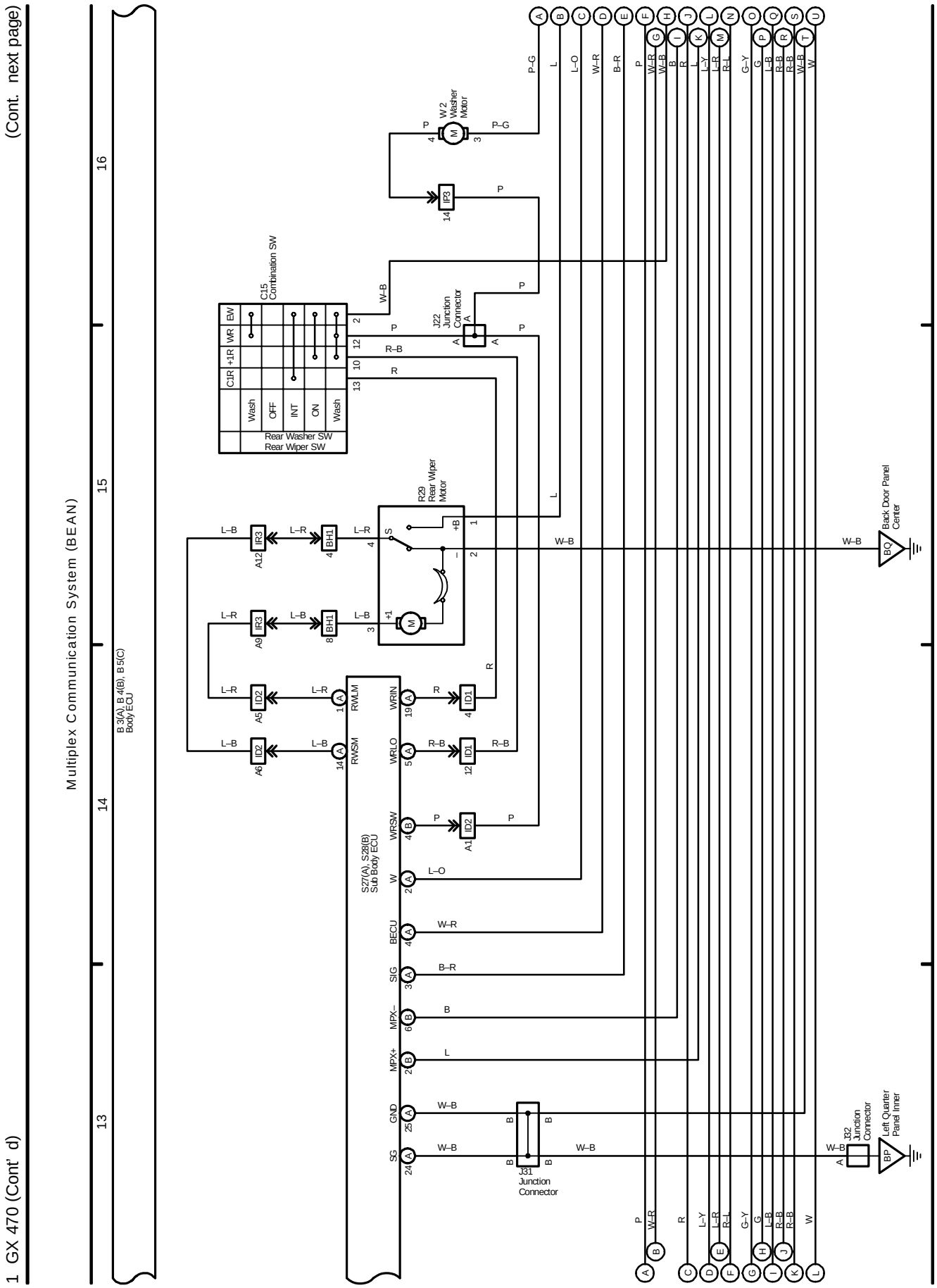
1 GX 470 (Cont' d)
(Cont. next page)
Multiplex Communication System (BEAN)
B 3(A), B 4(B), B 5(C)
Body ECU
W2
Washer
Motor
IP3
C15
Combination SW
J22
Junction
Connector
Rear Washer SW
Rear Wiper SW
R29
Rear Wiper
Motor
IR3
BH1
ID2
ID1
S27(A), S28(B)
Sub Body ECU
RWLM
RWSM
WRIN
WRLO
WRSW
W
BECU
SIG
MPX–
MPX+
GND
SG
J31
Junction
Connector
J32
Junction
Connector
Left Quarter
Panel Inner
Back Door Panel
Center
BQ
BP

(Cont. next page)

Multiplex Communication System (BEAN)

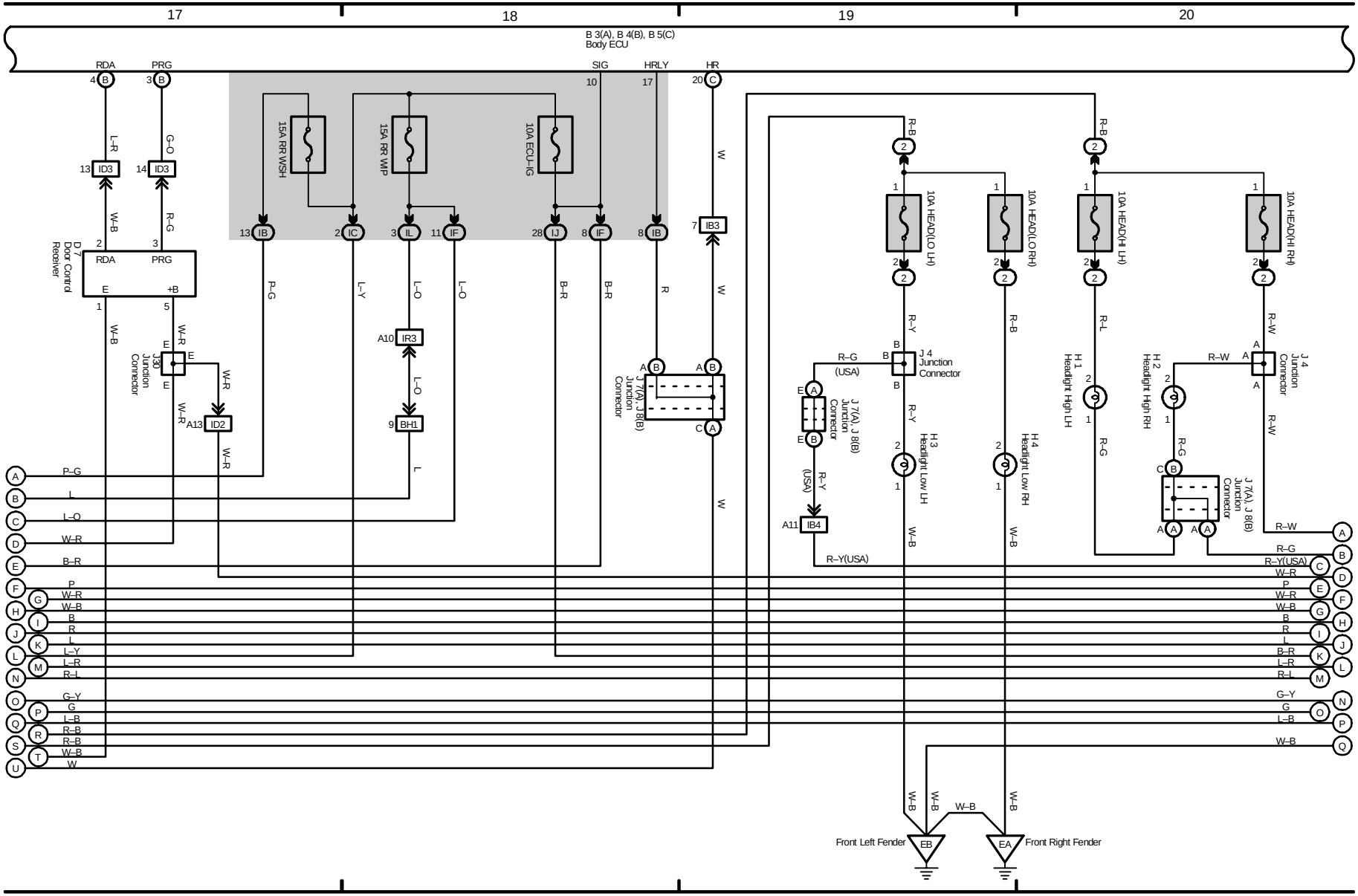

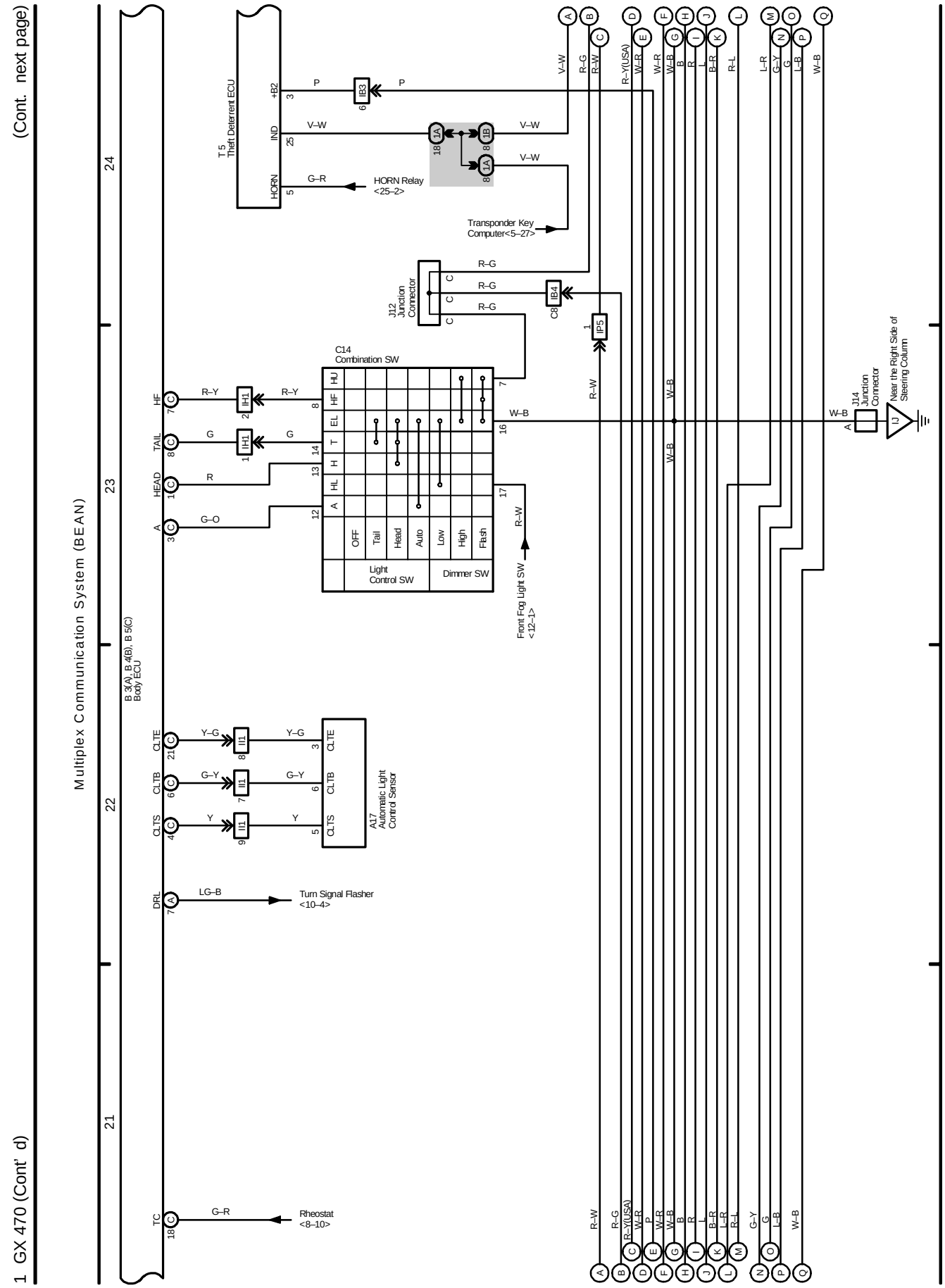
(Cont. next page)
1 GX 470 (Cont' d)
Multiplex Communication System (BEAN)
B 3(A), B 4(B), B 5(C)
Body ECU
T 5
Theft Deterrent ECU
+B2
IND
HORN
HORN Relay
<25–2>
Transponder Key
Computer<5–27>
J12
Junction
Connector
C14
Combination SW
HU
HF
EL
T
H
HL
A
OFF
Tail
Head
Auto
Low
High
Flash
Light
Control SW
Dimmer SW
Front Fog Light SW
<12–1>
HF
TAIL
HEAD
A
CLTE
CLTB
CLTS
DRL
TC
A17
Automatic Light
Control Sensor
Turn Signal Flasher
<10–4>
Rheostat
<8–10>
J14
Junction
Connector
Near the Right Side of
Steering Column
21
22
23
24

(Cont. next page)

Multiplex Communication System (BEAN)

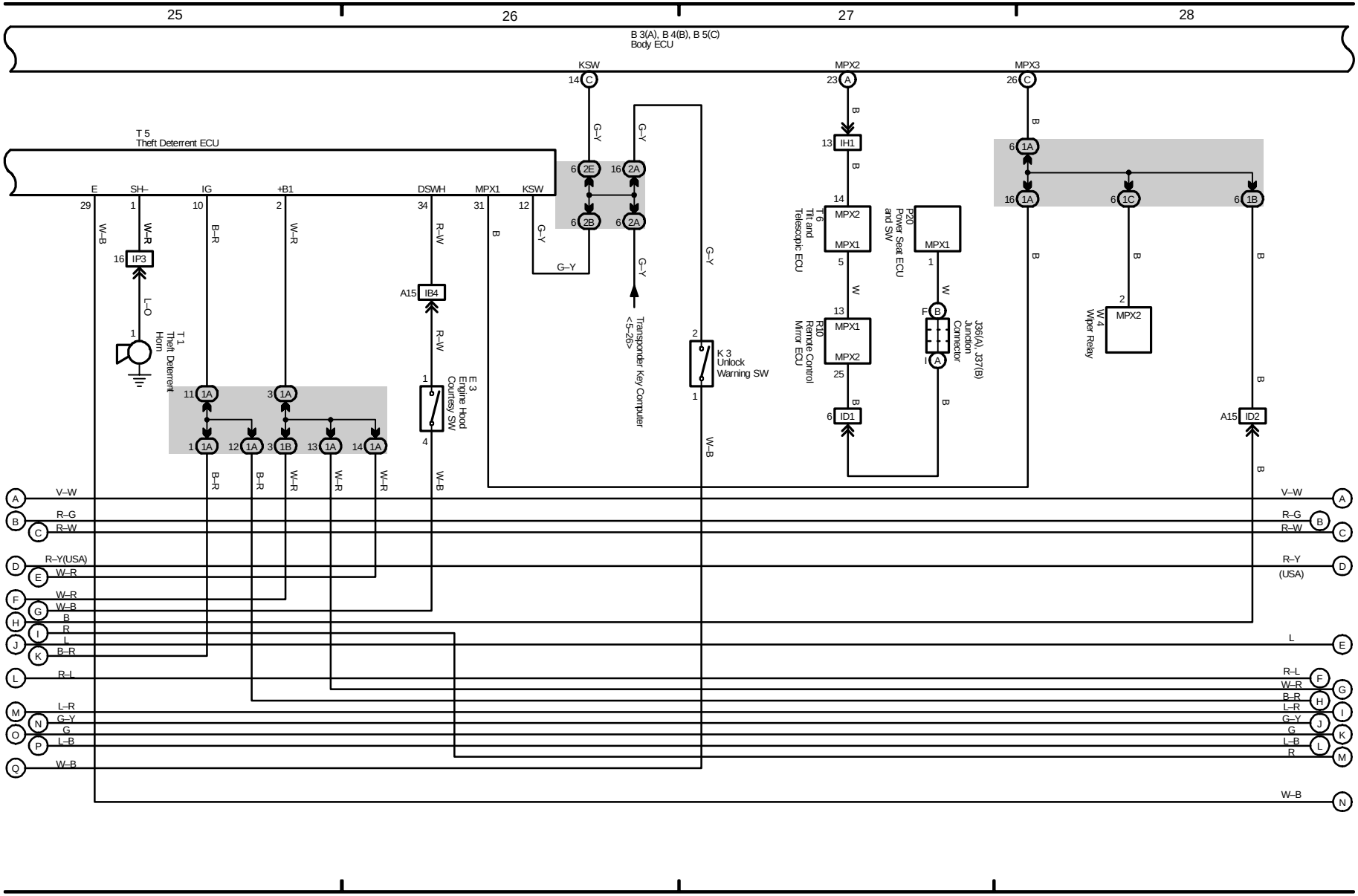

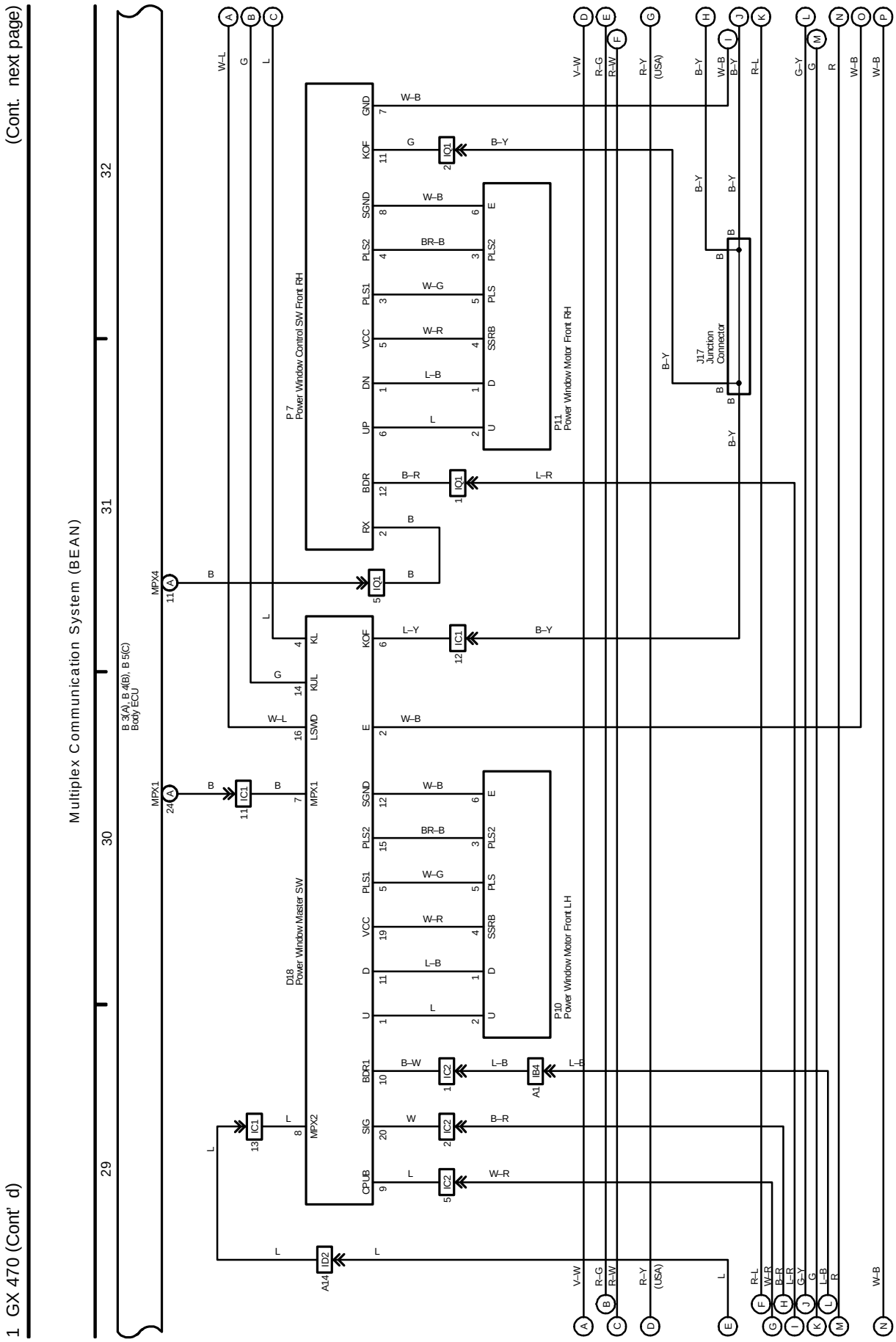
1 GX 470 (Cont' d)
(Cont. next page)
Multiplex Communication System (BEAN)
29
30
31
32
B 3(A), B 4(B), B 5(C)
Body ECU
MPX4
MPX1
D18
Power Window Master SW
P 7
Power Window Control SW Front RH
P10
Power Window Motor Front LH
P11
Power Window Motor Front RH
J17
Junction
Connector
IQ1
IC1
IC2
IB4
ID2
GND
KOF
SGND
PLS2
PLS1
VCC
DN
UP
BDR
RX
KL
KUL
LSWD
MPX1
MPX2
BDR1
SIG
CPUB
PLS
SSRB
W–B
G
B–Y
BR–B
W–G
W–R
L–B
L
B–R
L–R
L–Y
B
W–L
B–W
W
V–W
R–G
R–W
R–Y
(USA)
R–L
W–R
B–R
L–R
G–Y
L–B
R
W–B

(Cont. next page)

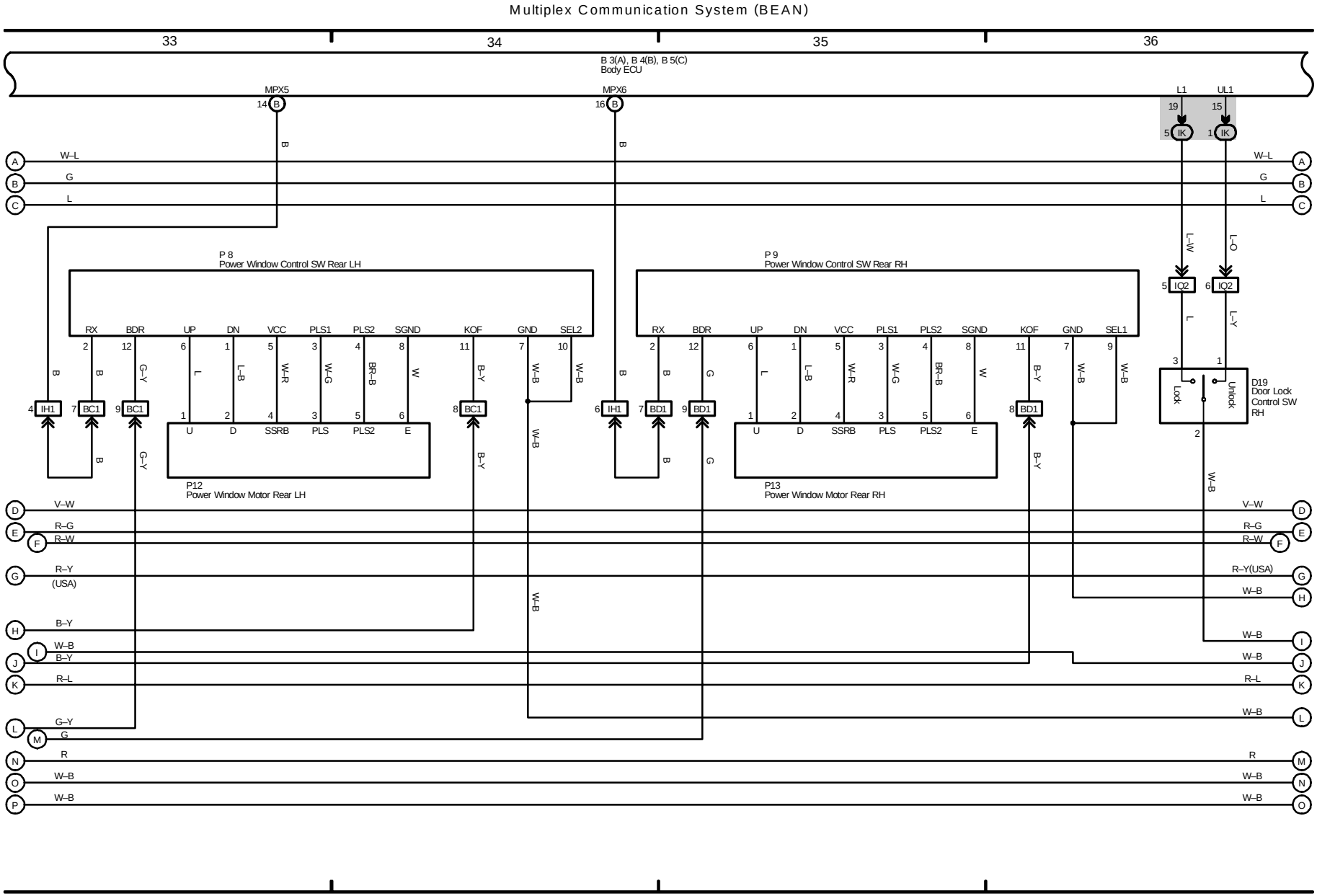

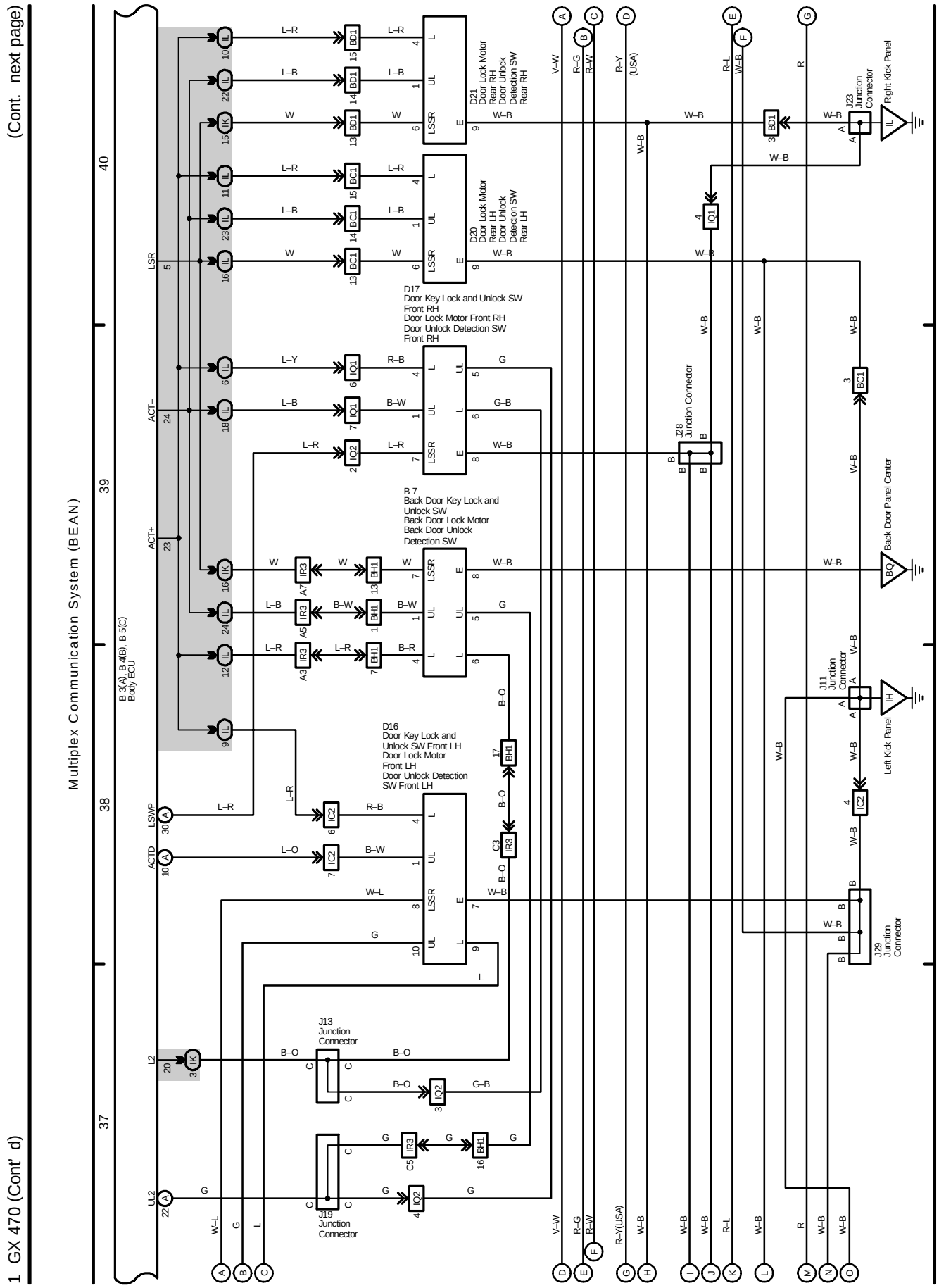
1 GX 470 (Cont' d)
(Cont. next page)
Multiplex Communication System (BEAN)
37
38
39
40
B 3(A), B 4(B), B 5(C)
Body ECU
D21
Door Lock Motor
Rear RH
Door Unlock
Detection SW
Rear RH
D20
Door Lock Motor
Rear LH
Door Unlock
Detection SW
Rear LH
D17
Door Key Lock and Unlock SW
Front RH
Door Lock Motor Front RH
Door Unlock Detection SW
Front RH
B 7
Back Door Key Lock and
Unlock SW
Back Door Lock Motor
Back Door Unlock
Detection SW
D16
Door Key Lock and
Unlock SW Front LH
Door Lock Motor
Front LH
Door Unlock Detection
SW Front LH
J23
Junction
Connector
Right Kick Panel
J28
Junction Connector
Back Door Panel Center
J11
Junction
Connector
Left Kick Panel
J29
Junction
Connector
J13
Junction
Connector
J19
Junction
Connector
LSR
ACT–
ACT+
LSWP
ACTD
L2
UL2
R–Y
(USA)
R–Y(USA)

(Cont. next page)

Multiplex Communication System (BEAN)

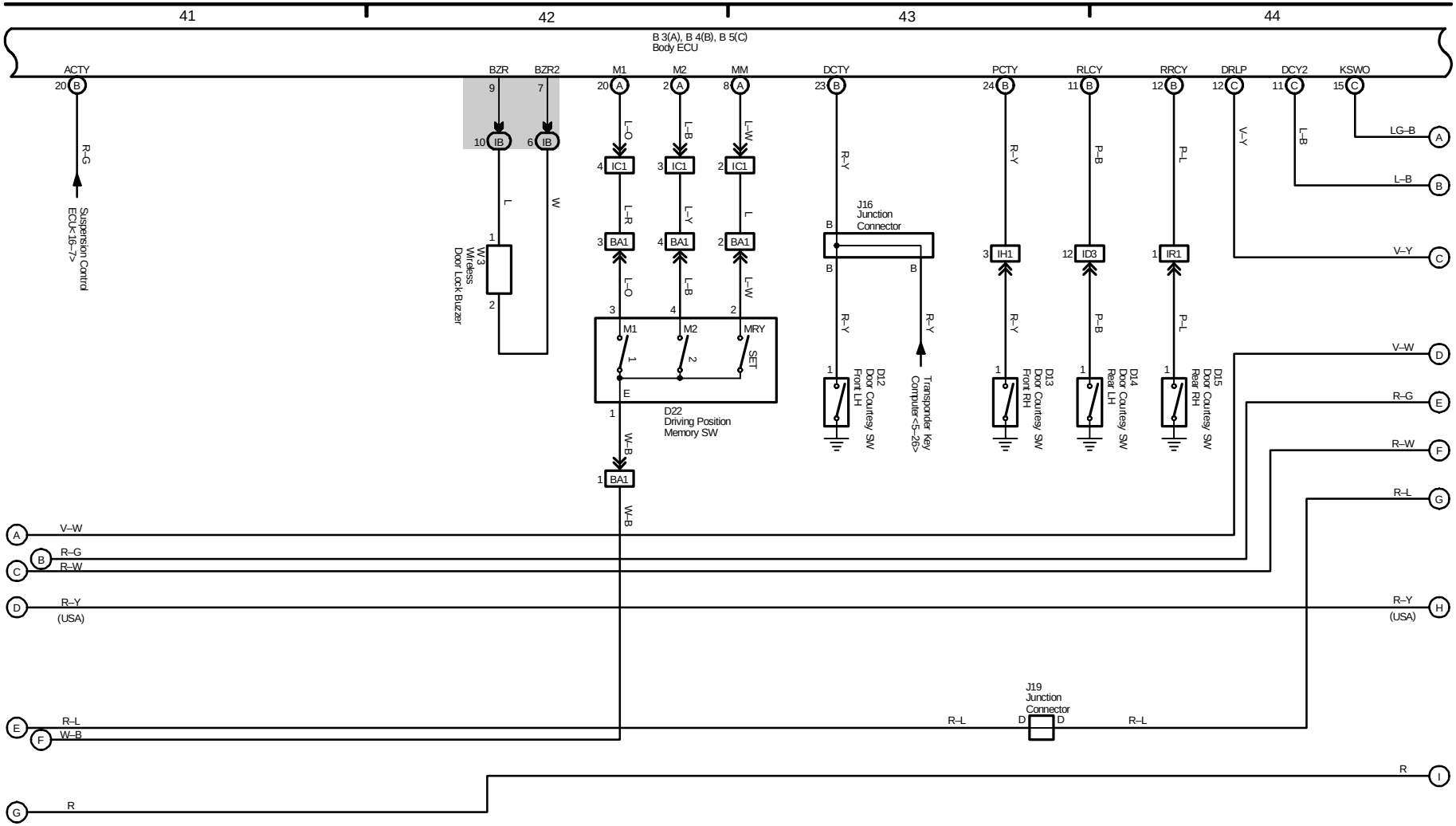

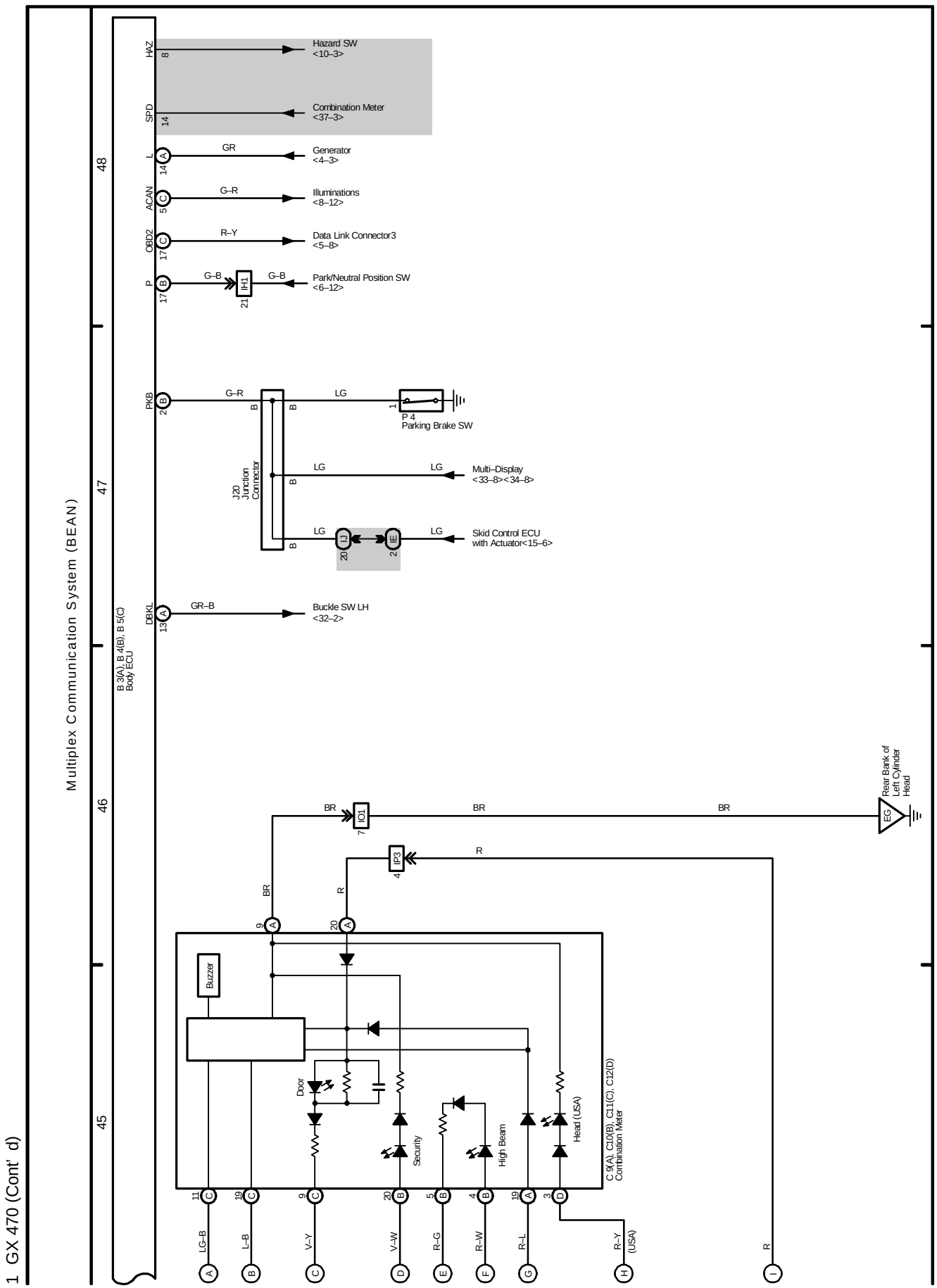
1 GX 470 (Cont' d)
Multiplex Communication System (BEAN)
45
46
47
48
B 3(A), B 4(B), B 5(C)
Body ECU
HAZ
SPD
L
ACAN
OBD2
P
PKB
DBKL
Hazard SW
<10–3>
Combination Meter
<37–3>
Generator
<4–3>
Illuminations
<8–12>
Data Link Connector3
<5–8>
Park/Neutral Position SW
<6–12>
P 4
Parking Brake SW
J20
Junction
Connector
Multi–Display
<33–8><34–8>
Skid Control ECU
with Actuator<15–6>
Buckle SW LH
<32–2>
Rear Bank of
Left Cylinder
Head
Buzzer
Door
Security
High Beam
Head (USA)
C 9(A), C10(B), C11(C), C12(D)
Combination Meter
LG–B
L–B
V–Y
V–W
R–G
R–W
R–L
R–Y
(USA)
R

2 GX 470

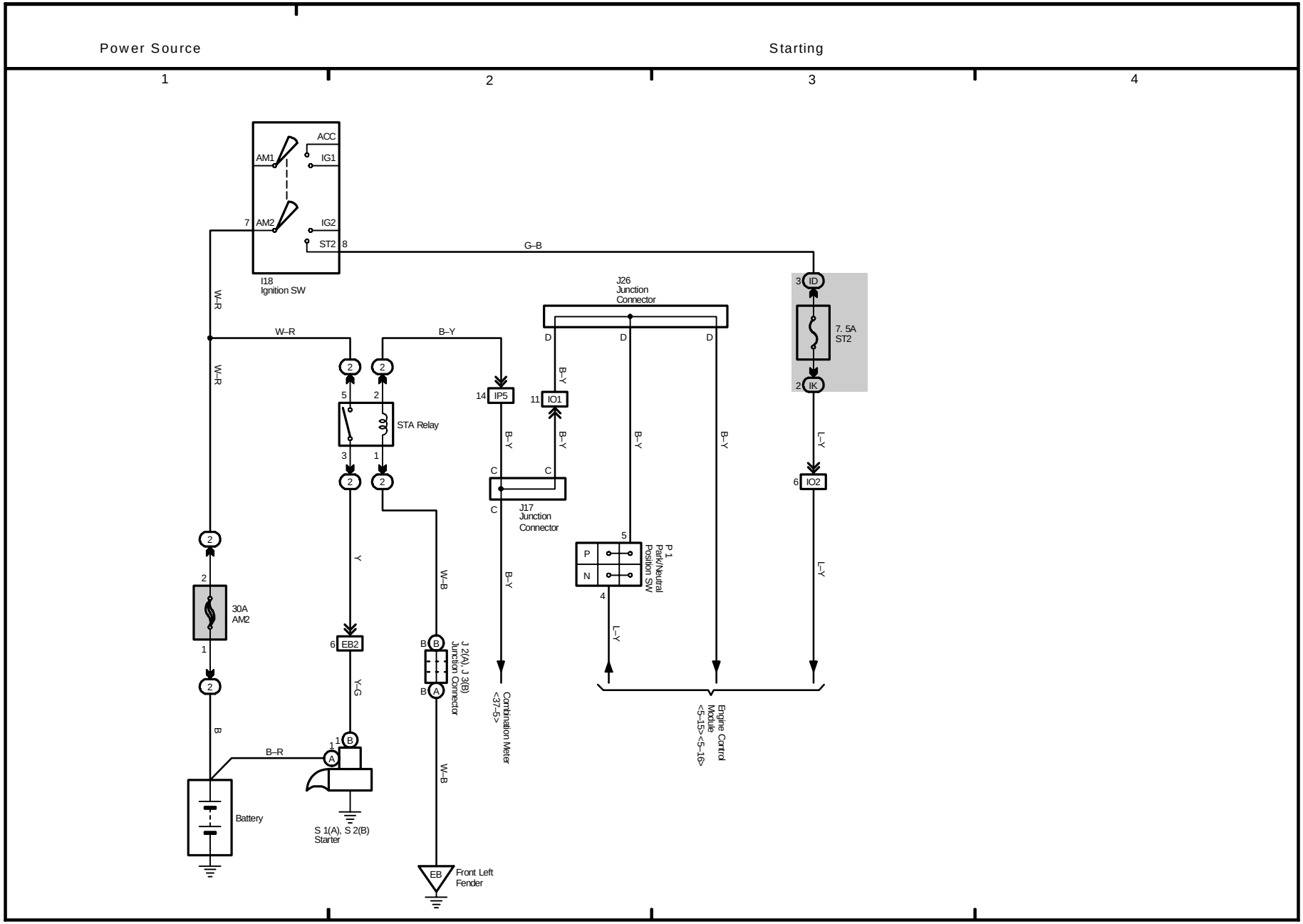
Power Source
Starting
1
2
3
4
ACC
AM1
IG1
AM2
IG2
ST2
I18
Ignition SW
G–B
W–R
B–Y
J26
Junction
Connector
ID
7. 5A
ST2
IK
IP5
IO1
STA Relay
J17
Junction
Connector
IO2
L–Y
P 1
Park/Neutral
Position SW
P
N
30A
AM2
EB2
Y
Y–G
W–B
J 2(A), J 3(B)
Junction Connector
Combination Meter
<37–5>
Engine Control
Module
<5–15><5–16>
B
B–R
Battery
S 1(A), S 2(B)
Starter
EB
Front Left
Fender

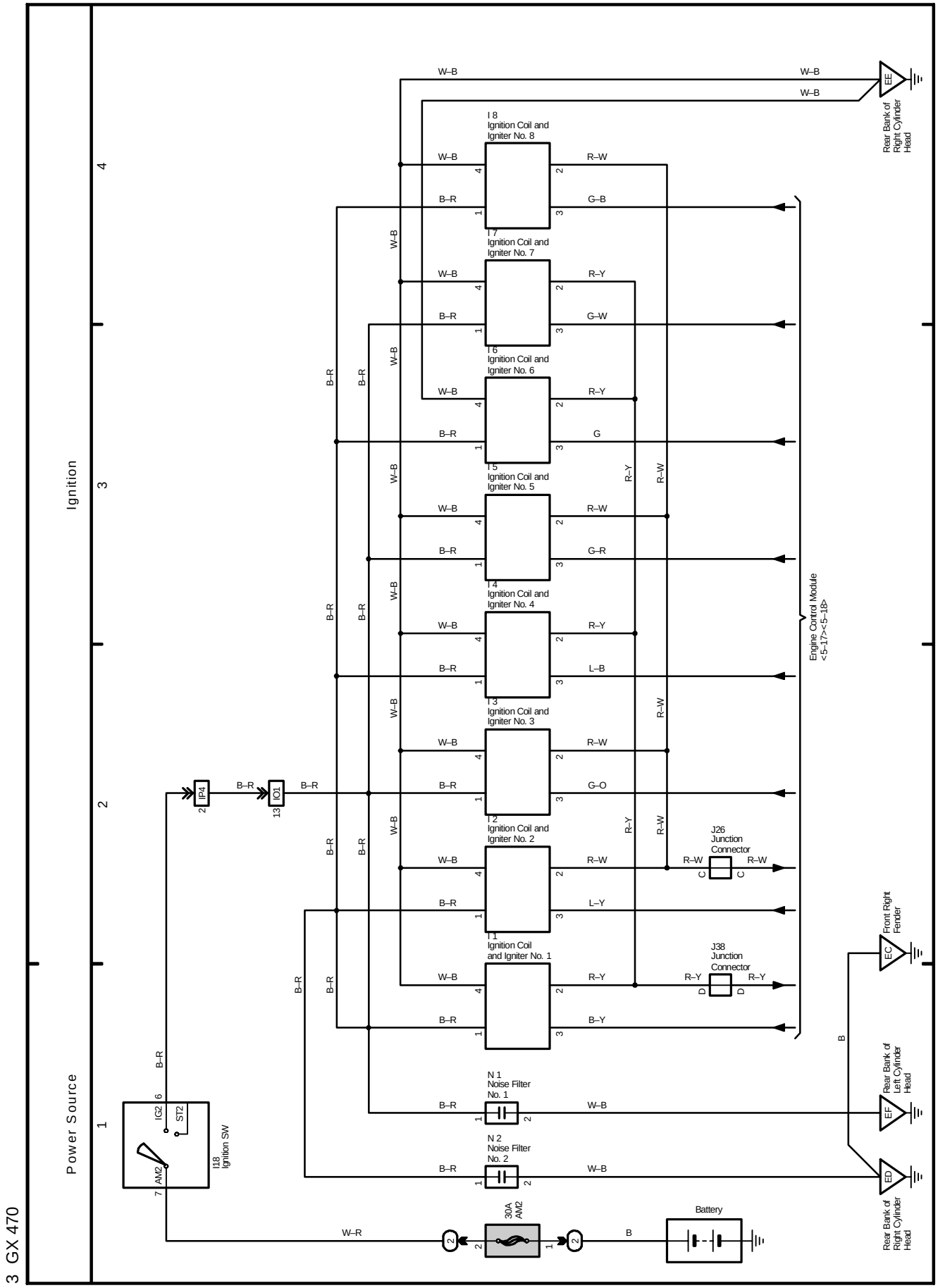
Power Source
Ignition
I 8
Ignition Coil and
Igniter No. 8
I 7
Ignition Coil and
Igniter No. 7
I 6
Ignition Coil and
Igniter No. 6
I 5
Ignition Coil and
Igniter No. 5
I 4
Ignition Coil and
Igniter No. 4
I 3
Ignition Coil and
Igniter No. 3
I 2
Ignition Coil and
Igniter No. 2
I 1
Ignition Coil
and Igniter No. 1
N 1
Noise Filter
No. 1
N 2
Noise Filter
No. 2
J26
Junction
Connector
J38
Junction
Connector
Engine Control Module
<5–17><5–18>
Rear Bank of
Right Cylinder
Head
Front Right
Fender
Rear Bank of
Left Cylinder
Head
Rear Bank of
Right Cylinder
Head
I18
Ignition SW
IG2
ST2
AM2
IP4
IO1
30A
AM2
Battery
W–B
B–R
R–W
G–B
R–Y
G–W
G
L–B
G–R
G–O
L–Y
B–Y
W–R
B
3 GX 470

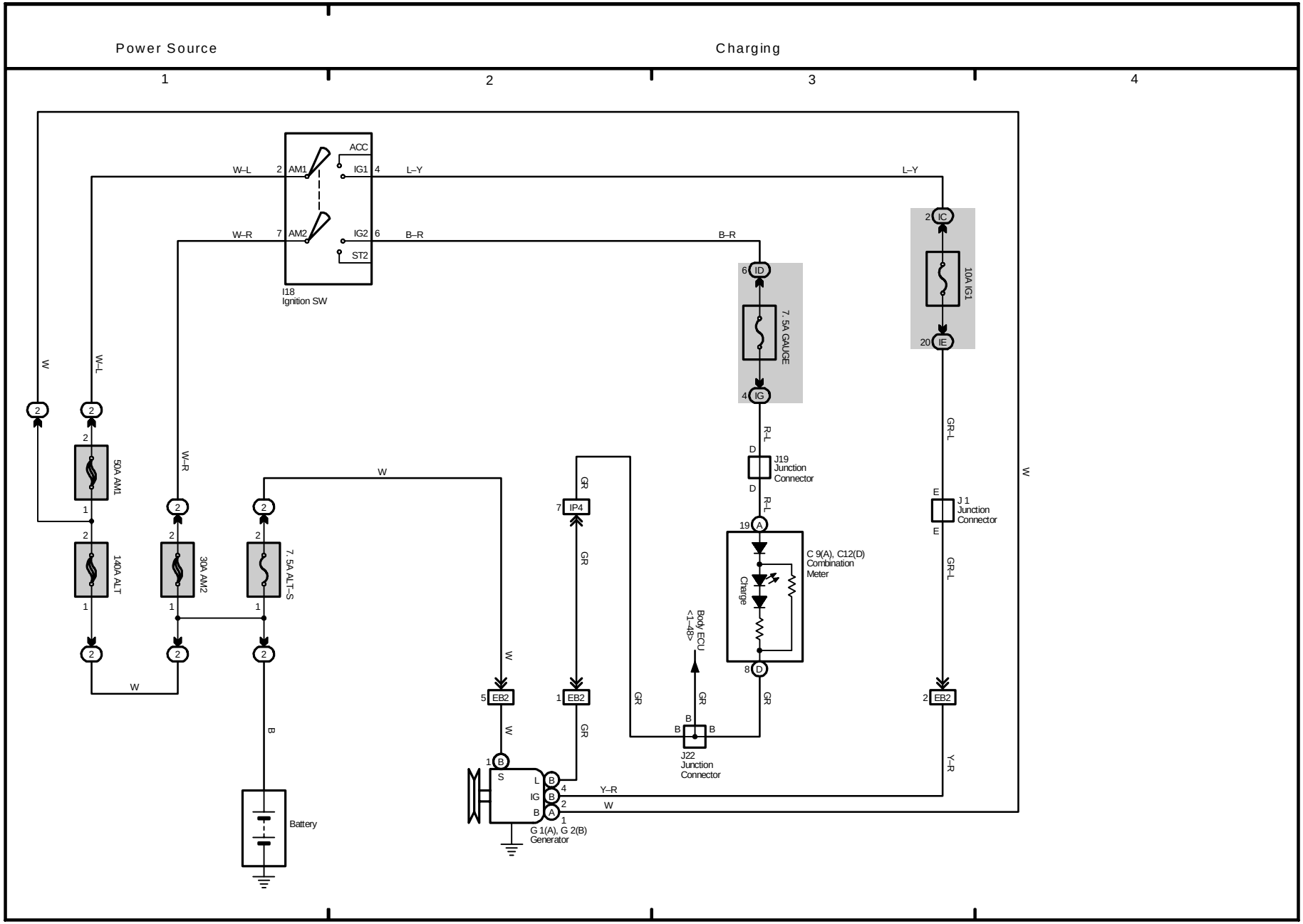
Power Source
Charging
1
2
3
4
ACC
IG1
IG2
ST2
AM1
AM2
I18
Ignition SW
W–L
W–R
L–Y
B–R
W
50A AM1
140A ALT
30A AM2
7.5A ALT–S
Battery
B
7.5A GAUGE
10A IG1
J19
Junction
Connector
R–L
GR–L
J 1
Junction
Connector
C 9(A), C12(D)
Combination
Meter
Charge
Body ECU
<1–48>
GR
J22
Junction
Connector
EB2
IP4
Y–R
G 1(A), G 2(B)
Generator

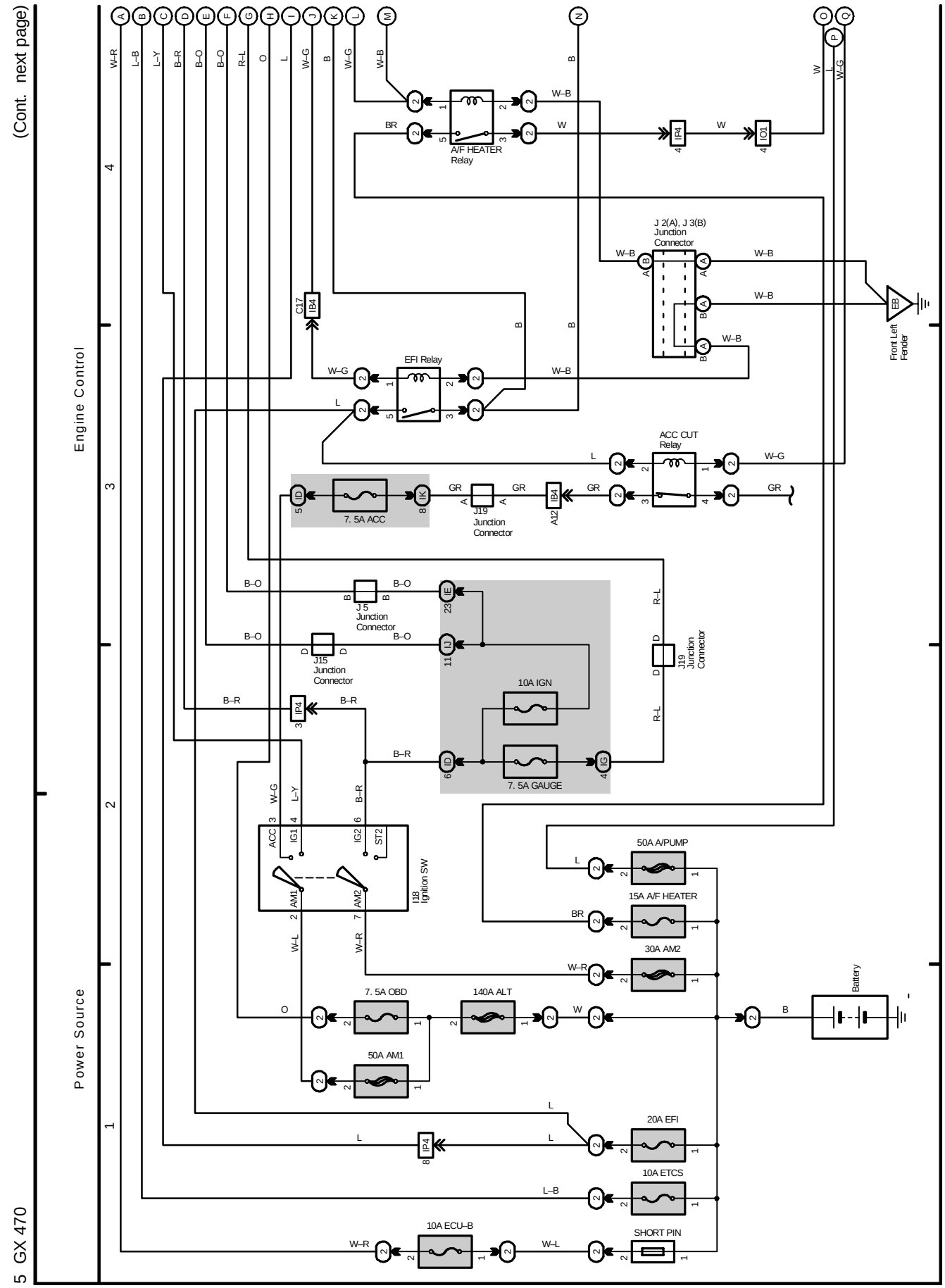
(Cont. next page)
Engine Control
Power Source
A/F HEATER Relay
J 2(A), J 3(B) Junction Connector
Front Left Fender
EFI Relay
ACC CUT Relay
7. 5A ACC
J19 Junction Connector
J 5 Junction Connector
J15 Junction Connector
10A IGN
7. 5A GAUGE
I19 Ignition SW
50A A/PUMP
15A A/F HEATER
30A AM2
Battery
7. 5A OBD
140A ALT
50A AM1
20A EFI
10A ETCS
10A ECU–B
SHORT PIN

(Cont. next page)

Engine Control

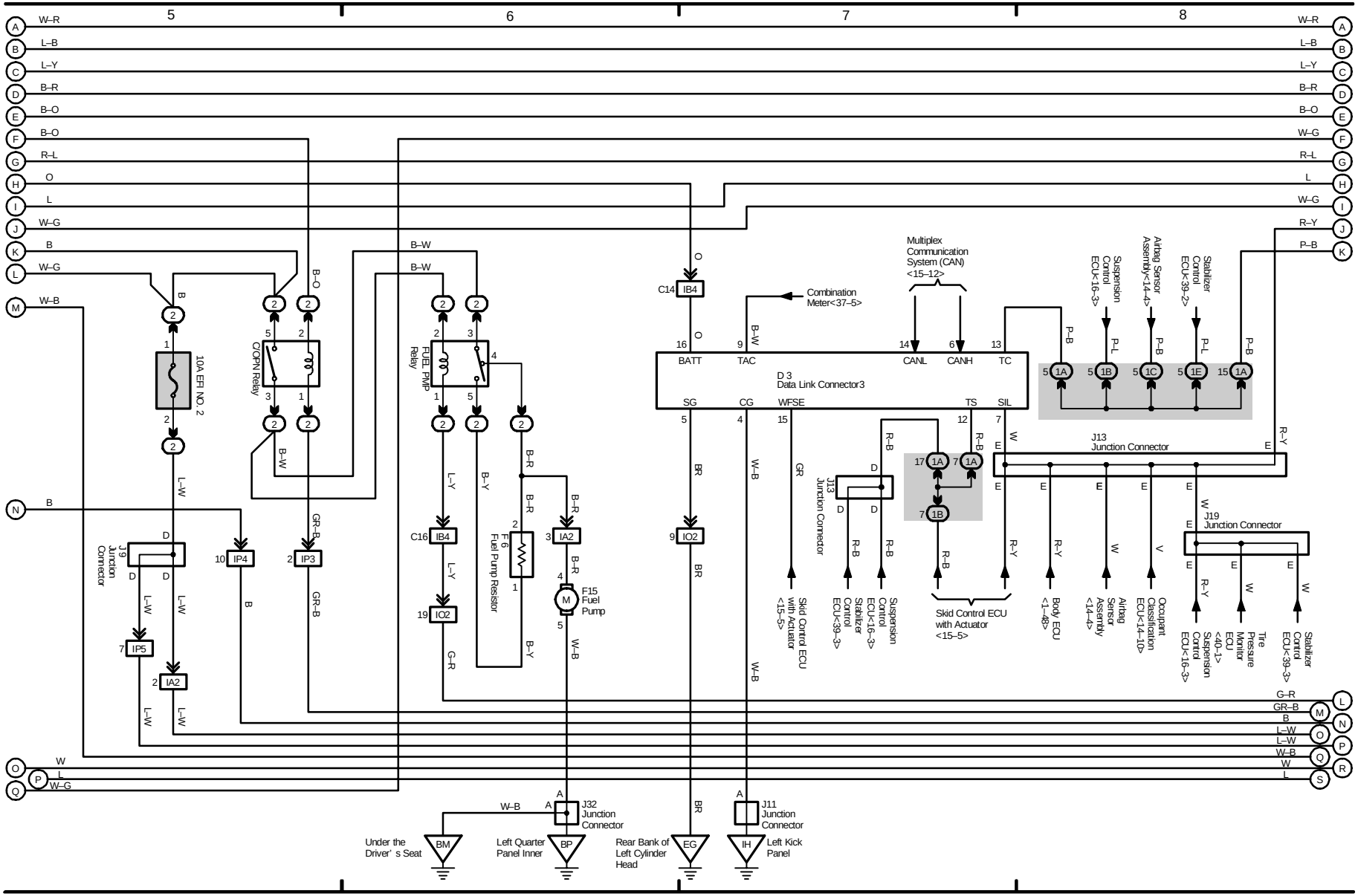

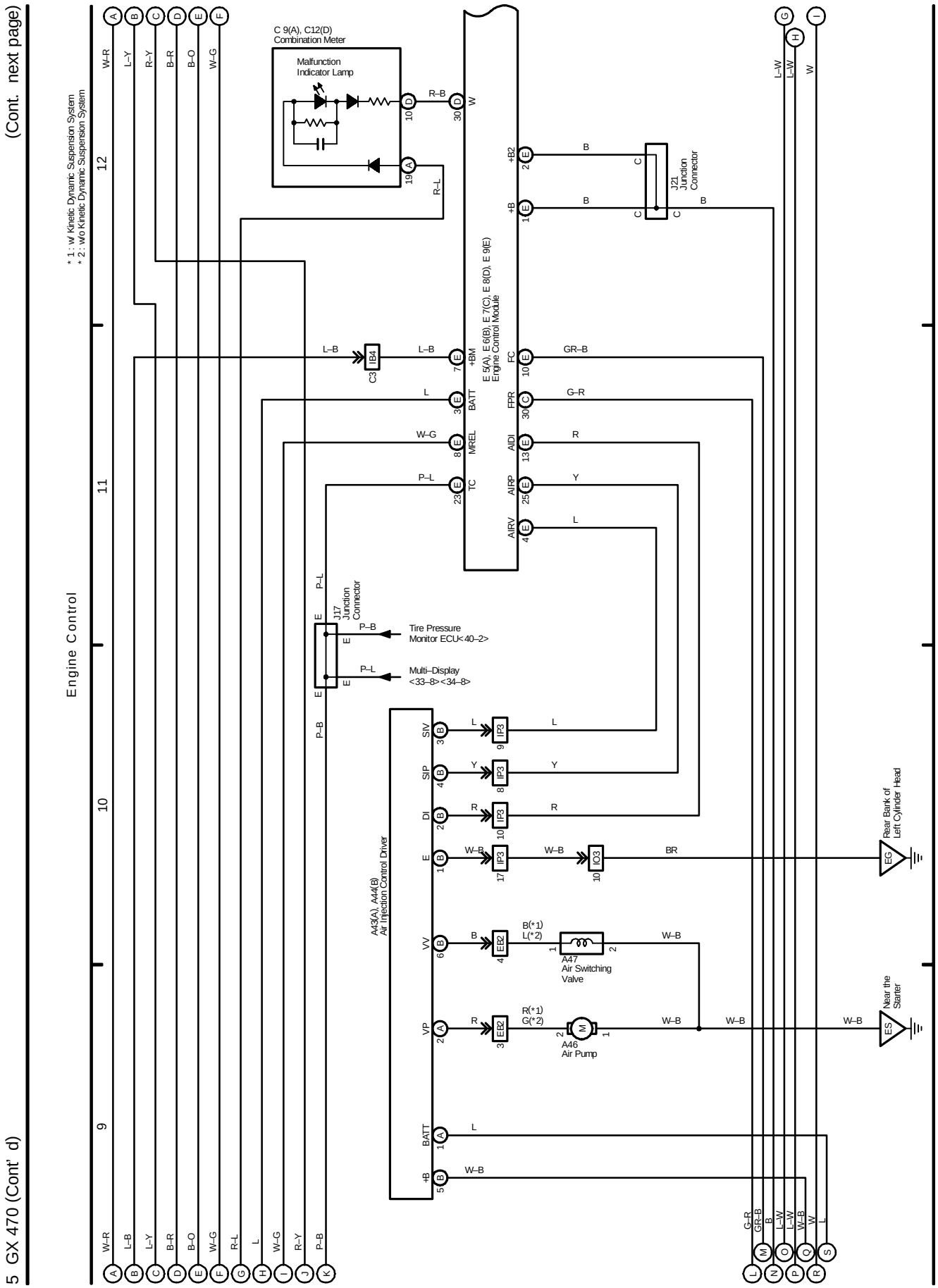
5 GX 470 (Cont' d)
(Cont. next page)
Engine Control
* 1 : w/ Kinetic Dynamic Suspension System
* 2 : w/o Kinetic Dynamic Suspension System
C 9(A), C12(D)
Combination Meter
Malfunction
Indicator Lamp
E 5(A), E 6(B), E 7(C), E 8(D), E 9(E)
Engine Control Module
J21
Junction
Connector
C3
IB4
J17
Junction
Connector
Tire Pressure
Monitor ECU< 40–2>
Multi–Display
<33–8><34–8>
A43(A), A44(B)
Air Injection Control Driver
A47
Air Switching
Valve
A46
Air Pump
Rear Bank of
Left Cylinder Head
Near the
Starter

(Cont. next page)

Engine Control

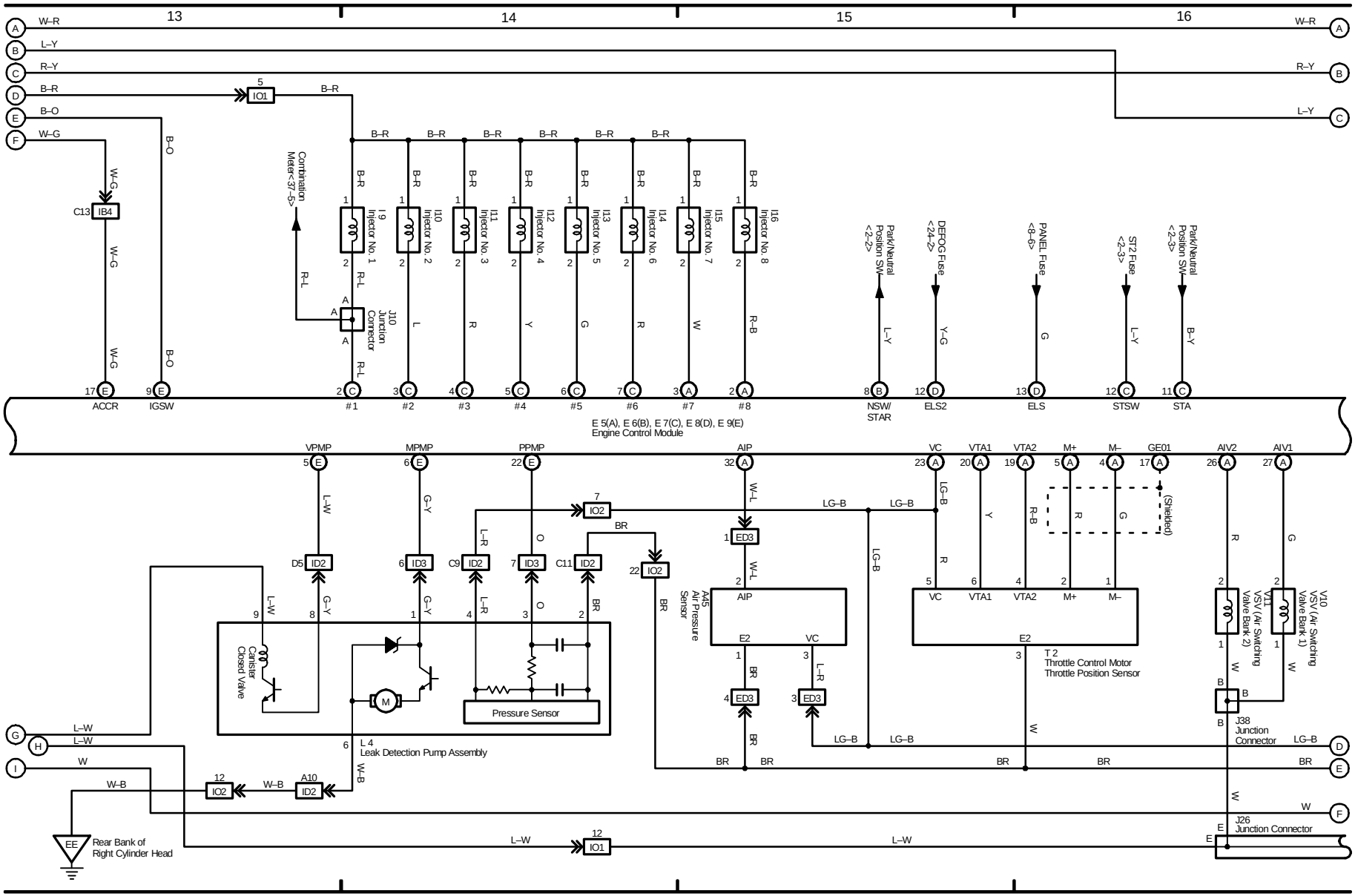

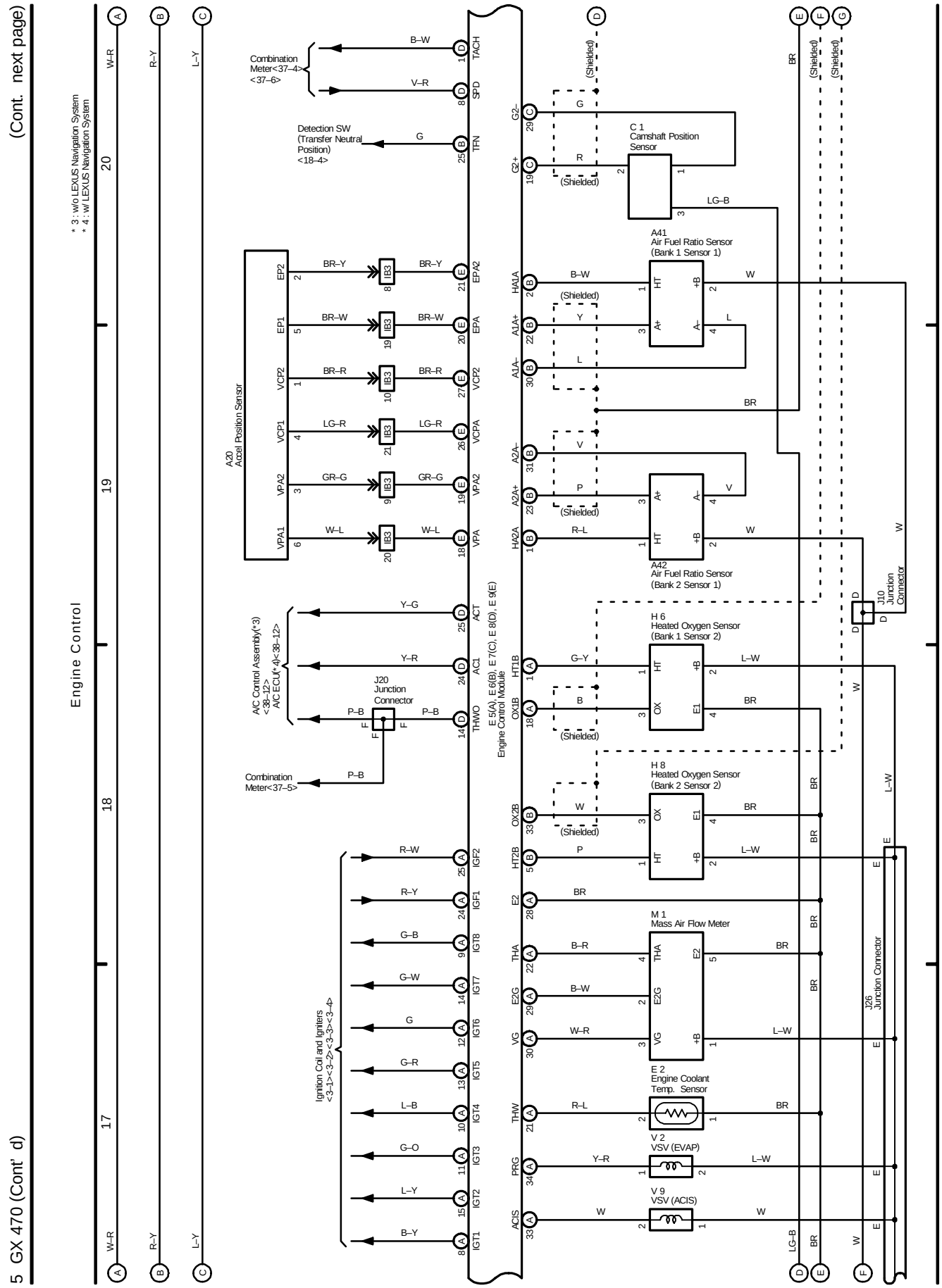
5 GX 470 (Cont' d)
(Cont. next page)
Engine Control
* 3 : w/o LEXUS Navigation System
* 4 : w/ LEXUS Navigation System
Combination Meter<37–4> <37–6>
Detection SW (Transfer Neutral Position) <18–4>
A20 Accel Position Sensor
A/C Control Assembly(*3) <38–12> A/C ECU(*4)<38–12>
J20 Junction Connector
Combination Meter<37–5>
Ignition Coil and Igniters <3-1><3-2><3-3><3-4>
E 5(A), E 6(B), E 7(C), E 8(D), E 9(E) Engine Control Module
C 1 Camshaft Position Sensor
A41 Air Fuel Ratio Sensor (Bank 1 Sensor 1)
A42 Air Fuel Ratio Sensor (Bank 2 Sensor 1)
H 6 Heated Oxygen Sensor (Bank 1 Sensor 2)
H 8 Heated Oxygen Sensor (Bank 2 Sensor 2)
M 1 Mass Air Flow Meter
E 2 Engine Coolant Temp. Sensor
V 2 VSV (EVAP)
V 9 VSV (ACIS)
J10 Junction Connector
J26 Junction Connector
(Shielded)

(Cont. next page)

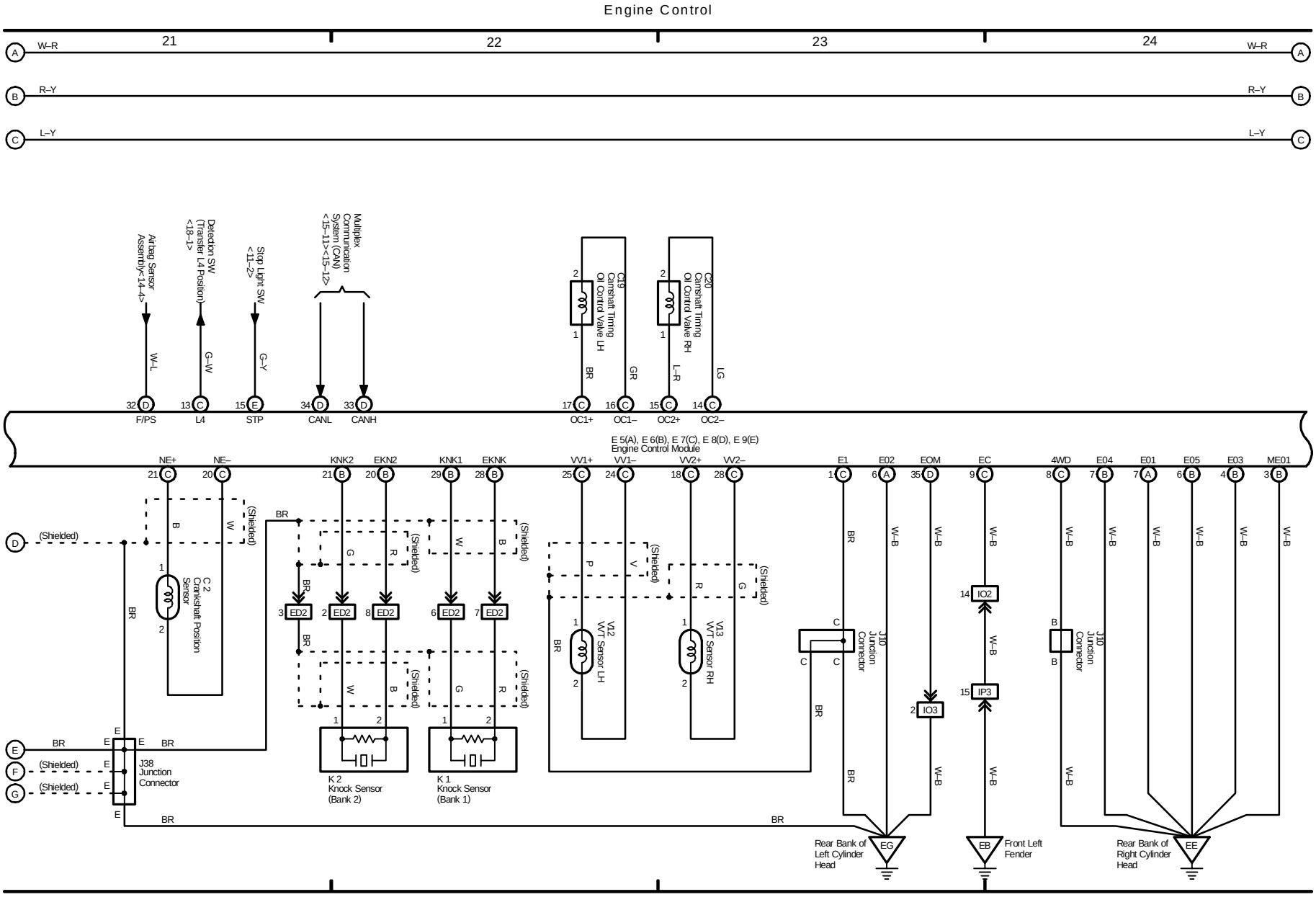

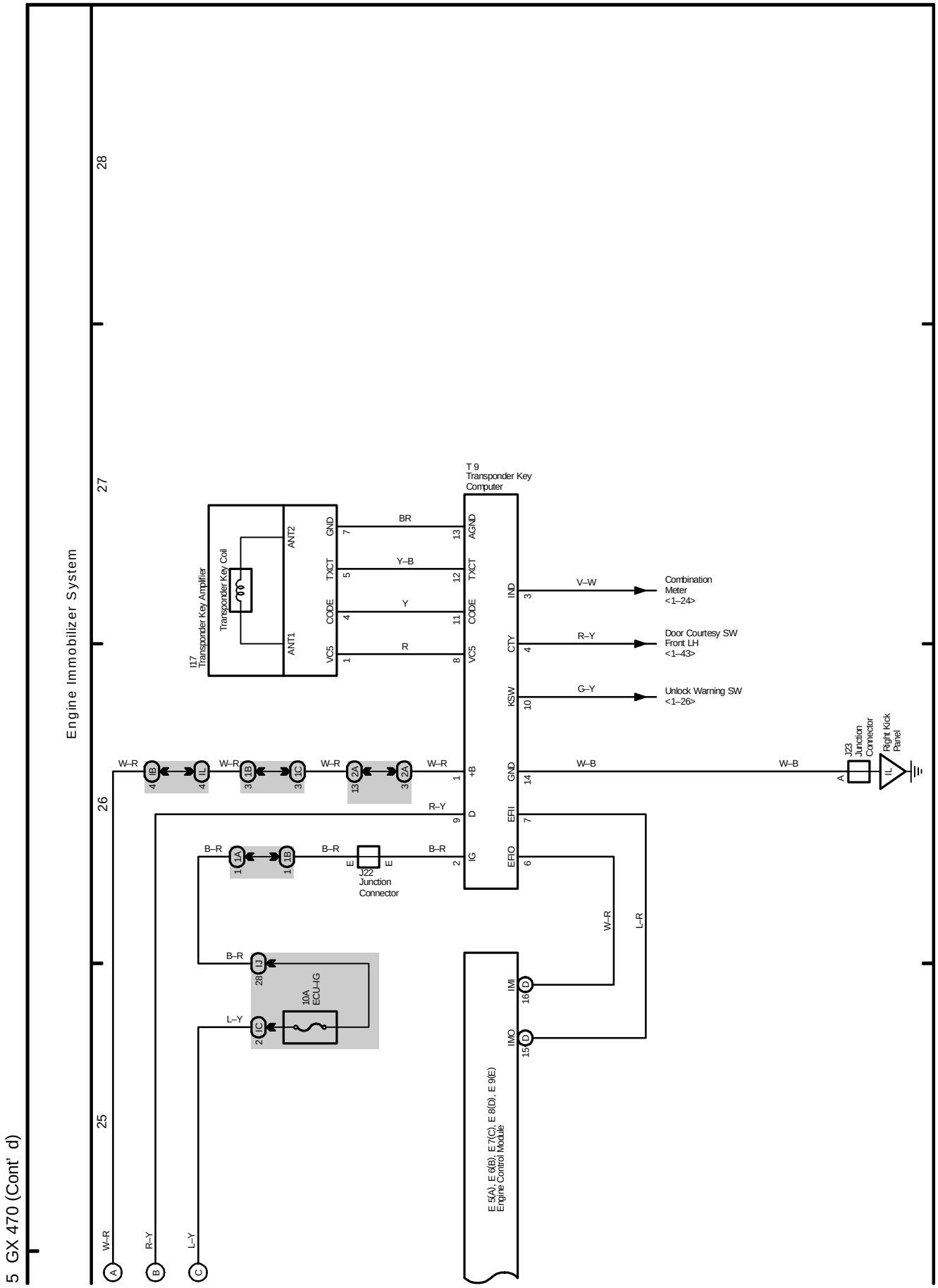
5 GX 470 (Cont' d)
Engine Immobilizer System
25
26
27
28
I17
Transponder Key Amplifier
Transponder Key Coil
ANT2
ANT1
GND
TXCT
CODE
VC5
BR
Y–B
Y
R
T 9
Transponder Key
Computer
AGND
TXCT
CODE
VC5
+B
D
IG
IND
CTY
KSW
GND
EFI
EFIO
IMI
IMO
V–W
R–Y
G–Y
Combination
Meter
<1–24>
Door Courtesy SW
Front LH
<1–43>
Unlock Warning SW
<1–26>
W–B
J23
Junction
Connector
Right Kick
Panel
W–R
R–Y
B–R
L–Y
J22
Junction
Connector
10A
ECU–IG
E 5(A), E 6(B), E 7(C), E 8(D), E 9(E)
Engine Control Module

(Cont. next page)

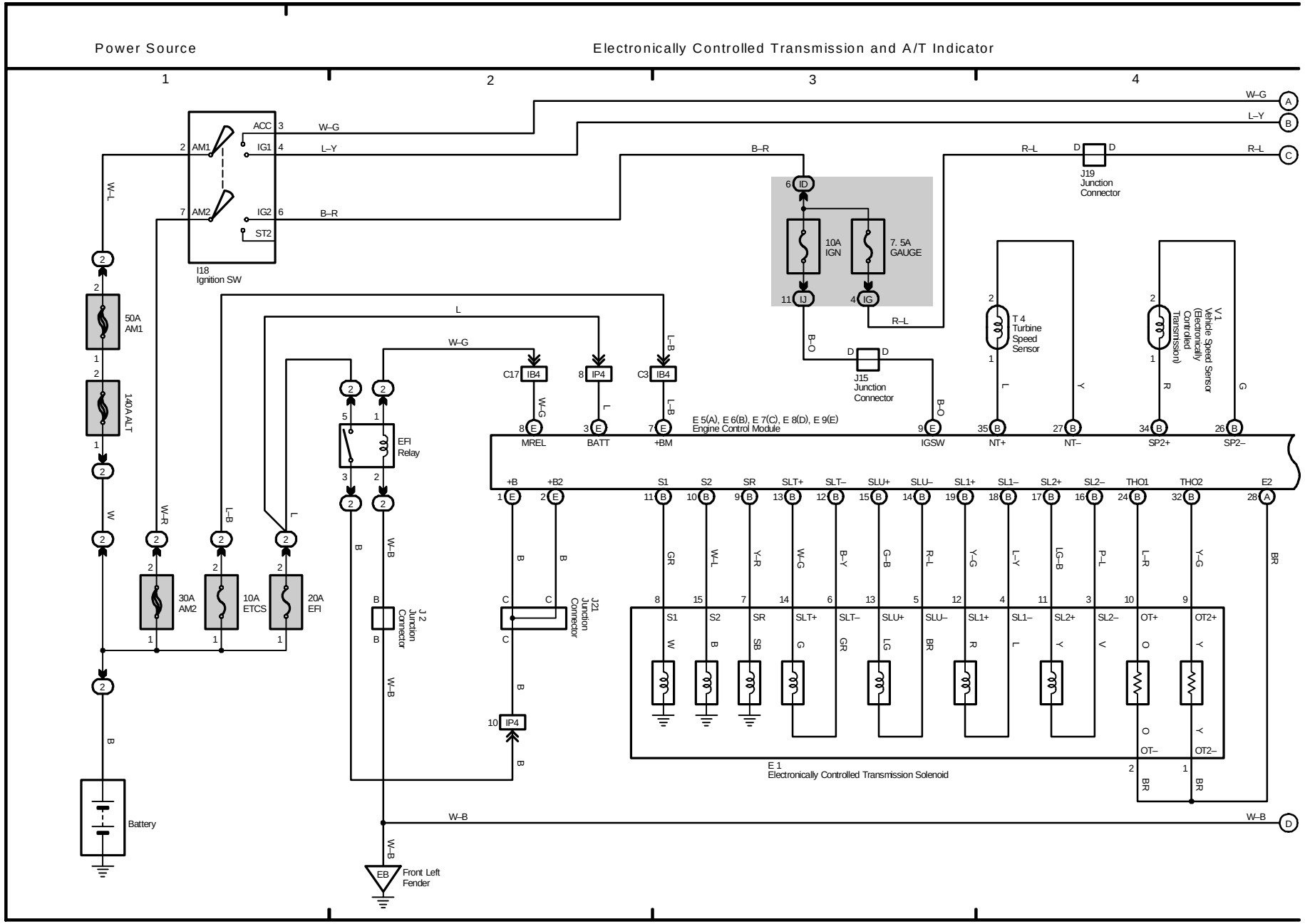

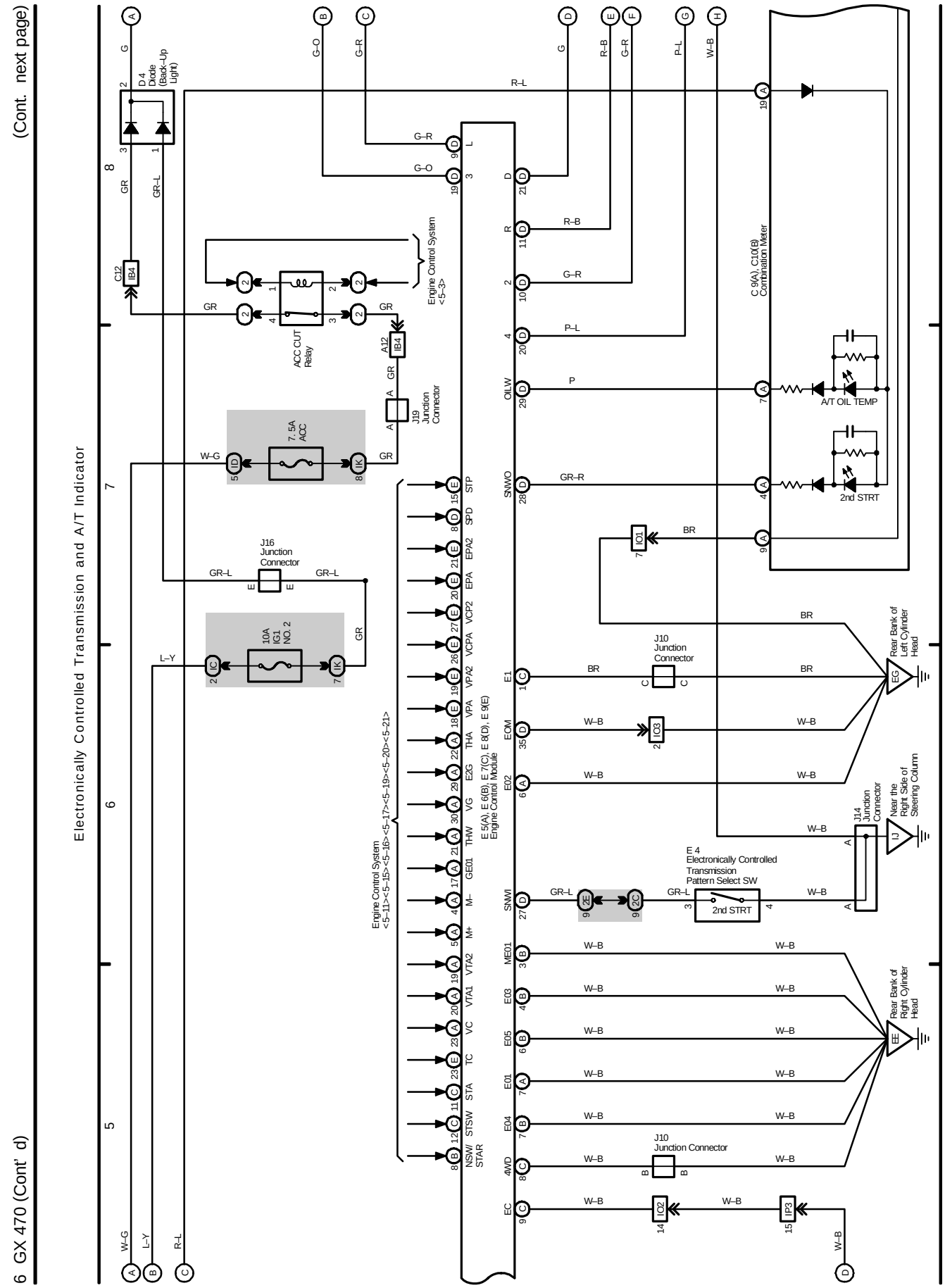
6 GX 470 (Cont' d)
(Cont. next page)
Electronically Controlled Transmission and A/T Indicator
D 4
Diode
(Back-Up
Light)
C12
IB4
ACC CUT
Relay
Engine Control System
<5-3>
A12
IB4
J19
Junction
Connector
7. 5A
ACC
J16
Junction
Connector
10A
IG1
NO. 2
Engine Control System
<5-11><5-15><5-16><5-17><5-19><5-20><5-21>
E 5(A), E 6(B), E 7(C), E 8(D), E 9(E)
Engine Control Module
C 9(A), C10(B)
Combination Meter
A/T OIL TEMP
2nd STRT
J10
Junction
Connector
Rear Bank of
Left Cylinder
Head
Rear Bank of
Right Cylinder
Head
J14
Junction
Connector
Near the
Right Side of
Steering Column
E 4
Electronically Controlled
Transmission
Pattern Select SW
2nd STRT

Electronically Controlled Transmission and A/T Indicator

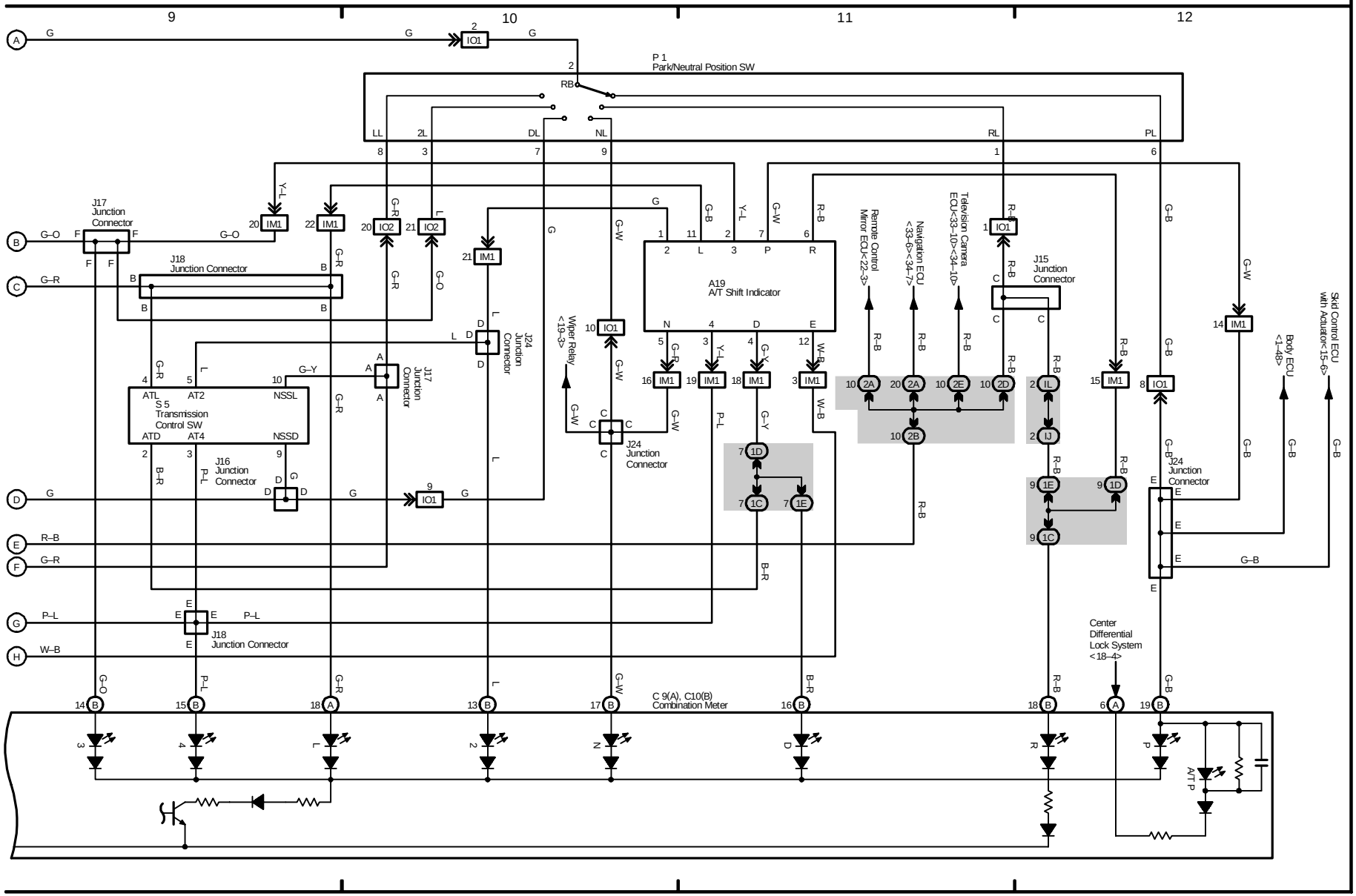

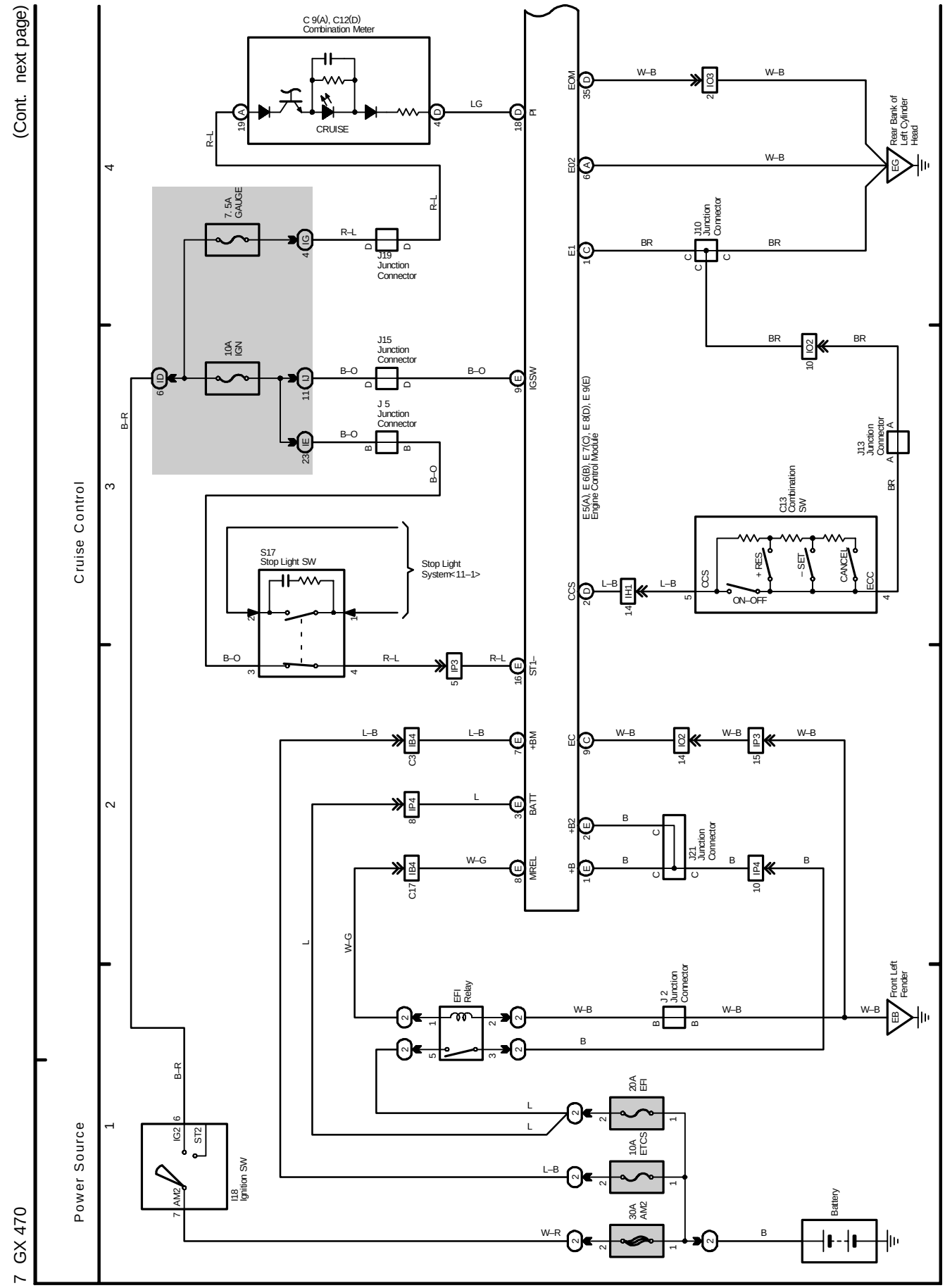
(Cont. next page)
Power Source
Cruise Control
C 9(A), C12(D)
Combination Meter
CRUISE
7.5A
GAUGE
10A
IGN
J19
Junction
Connector
J15
Junction
Connector
J 5
Junction
Connector
S17
Stop Light SW
Stop Light
System<11–1>
I18
Ignition SW
IG2
ST2
AM2
EFI
Relay
J 2
Junction
Connector
J21
Junction
Connector
J10
Junction
Connector
J13
Junction
Connector
C13
Combination
SW
+ RES
– SET
CANCEL
ON–OFF
CCS
ECC
E5(A), E 6(B), E 7(C), E 8(D), E 9(E)
Engine Control Module
EOM
E02
E1
CCS
EC
+B2
+B
PI
IGSW
ST1–
+BM
BATT
MREL
Rear Bank of
Left Cylinder
Head
Front Left
Fender
20A
EFI
10A
ETCS
30A
AM2
Battery
7 GX 470

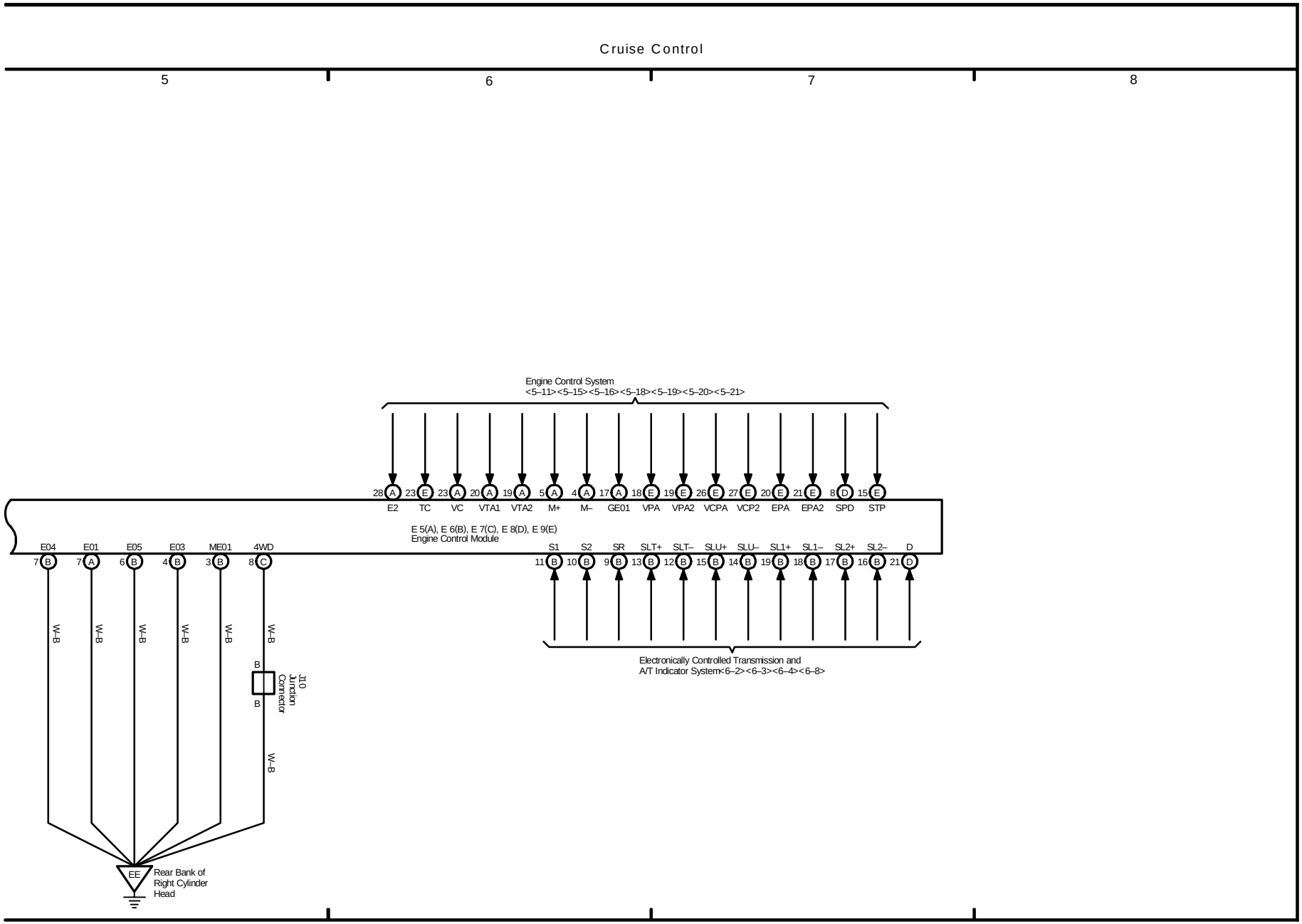
Cruise Control
5
6
7
8
Engine Control System
<5–11><5–15><5–16><5–18><5–19><5–20><5–21>
28 A E2
23 E TC
23 A VC
20 A VTA1
19 A VTA2
5 A M+
4 A M–
17 A GE01
18 E VPA
19 E VPA2
26 E VCPA
27 E VCP2
20 E EPA
21 E EPA2
8 D SPD
15 E STP
E 5(A), E 6(B), E 7(C), E 8(D), E 9(E)
Engine Control Module
E04 7 B
E01 7 A
E05 6 B
E03 4 B
ME01 3 B
4WD 8 C
S1 11 B
S2 10 B
SR 9 B
SLT+ 13 B
SLT– 12 B
SLU+ 15 B
SLU– 14 B
SL1+ 19 B
SL1– 18 B
SL2+ 17 B
SL2– 16 B
D 21 D
W–B
J10
Junction
Connector
B
EE
Rear Bank of
Right Cylinder
Head
Electronically Controlled Transmission and
A/T Indicator System<6–2><6–3><6–4><6–8>

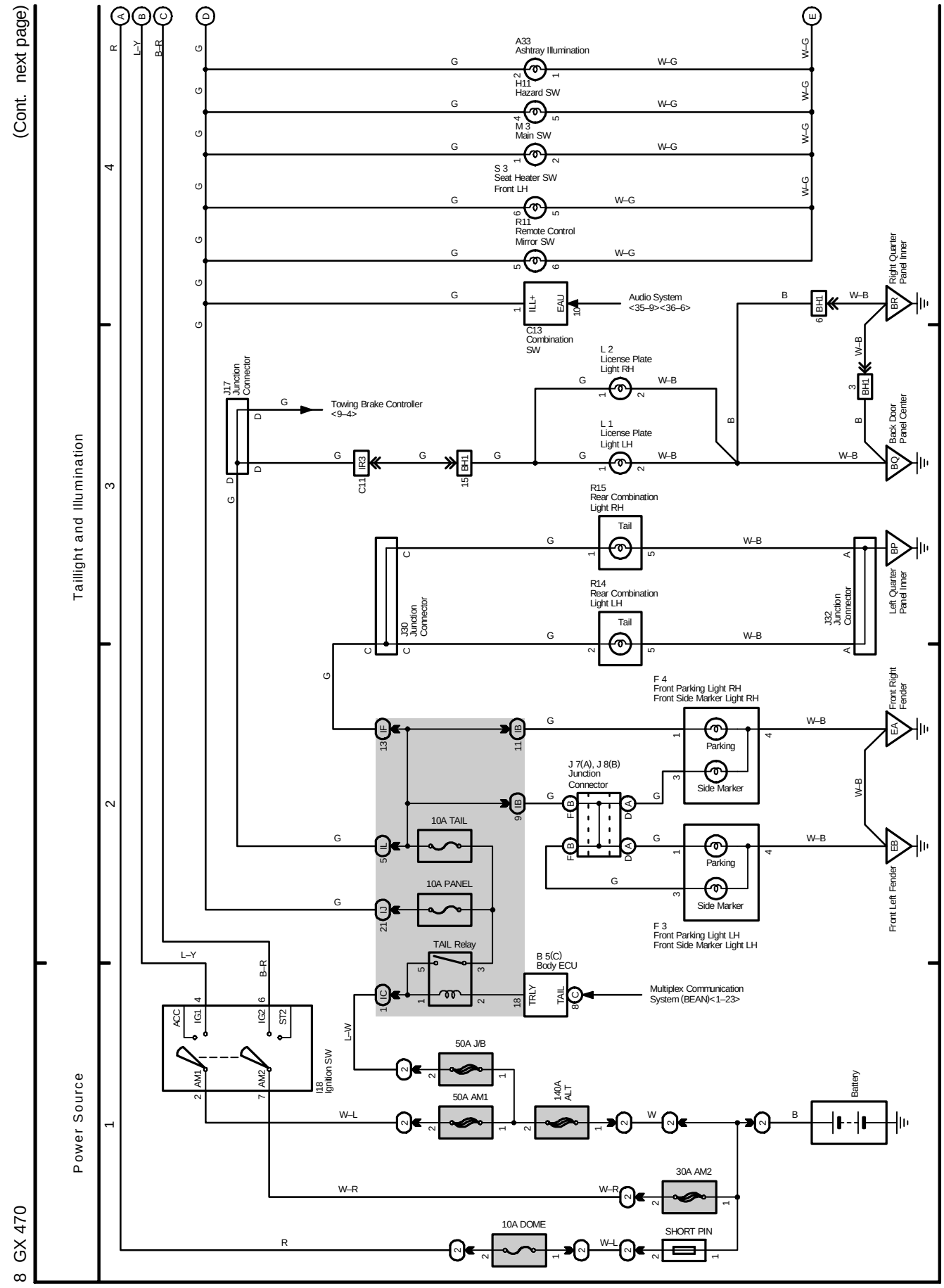
(Cont. next page)
Taillight and Illumination
Power Source
A33
Ashtray Illumination
H11
Hazard SW
M 3
Main SW
S 3
Seat Heater SW
Front LH
R11
Remote Control
Mirror SW
C13
Combination
SW
Audio System
<35–9><36–6>
Right Quarter
Panel Inner
Back Door
Panel Center
J17
Junction
Connector
Towing Brake Controller
<9–4>
L 2
License Plate
Light RH
L 1
License Plate
Light LH
R15
Rear Combination
Light RH
R14
Rear Combination
Light LH
J30
Junction
Connector
J32
Junction
Connector
Left Quarter
Panel Inner
F 4
Front Parking Light RH
Front Side Marker Light RH
F 3
Front Parking Light LH
Front Side Marker Light LH
Front Right
Fender
Front Left Fender
J 7(A), J 8(B)
Junction
Connector
10A TAIL
10A PANEL
TAIL Relay
B 5(C)
Body ECU
Multiplex Communication
System (BEAN)<1–23>
I18
Ignition SW
50A J/B
50A AM1
140A
ALT
Battery
30A AM2
10A DOME
SHORT PIN

(Cont. next page)

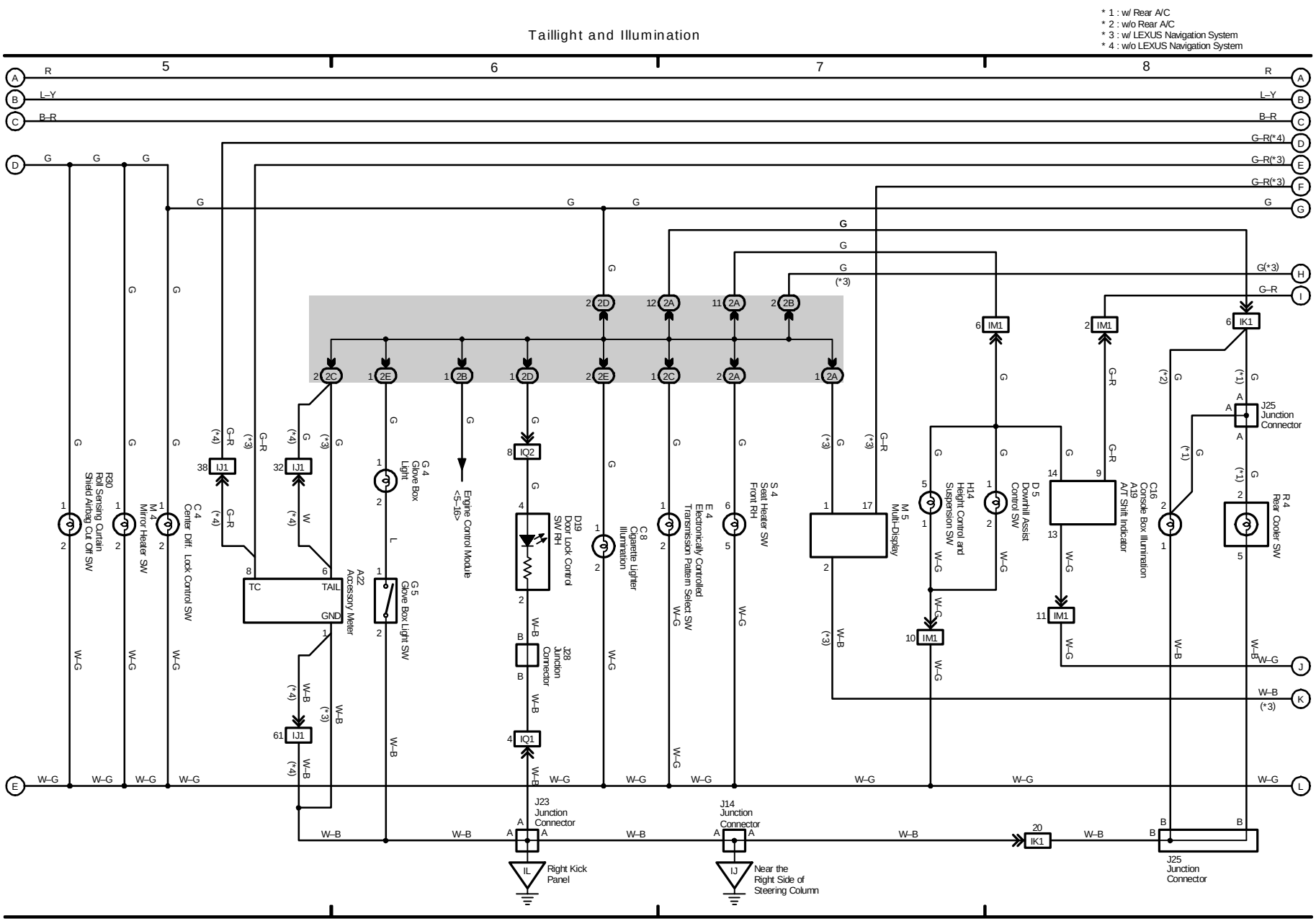

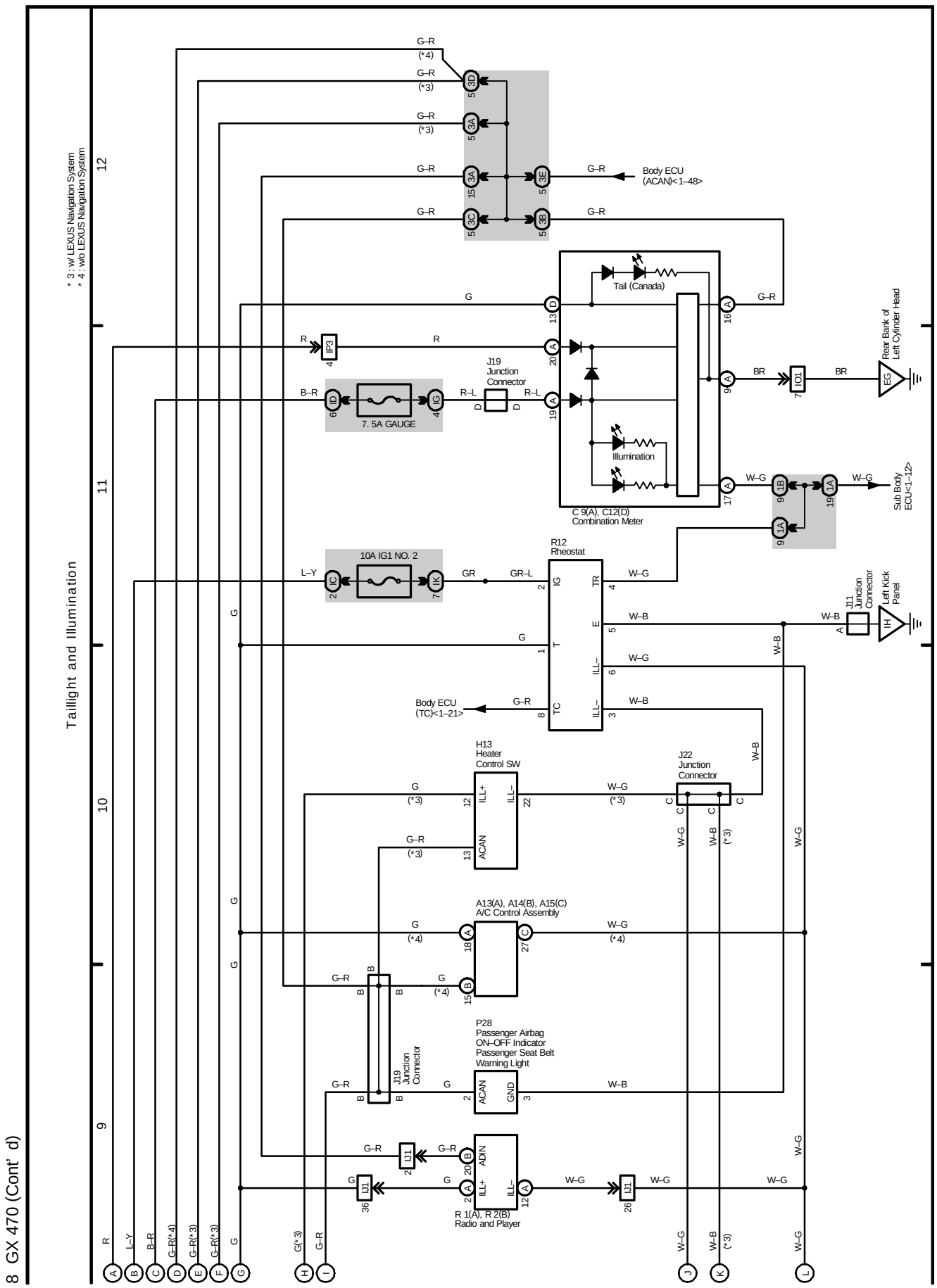
Taillight and Illumination
* 3 : w/ LEXUS Navigation System
* 4 : w/o LEXUS Navigation System
Body ECU (ACAN)<1–48>
Tail (Canada)
Illumination
C 9(A), C12(D) Combination Meter
Rear Bank of Left Cylinder Head
Sub Body ECU<1–12>
J19 Junction Connector
7. 5A GAUGE
10A IG1 NO. 2
R12 Rheostat
Body ECU (TC)<1–21>
J11 Junction Connector
Left Kick Panel
H13 Heater Control SW
J22 Junction Connector
A13(A), A14(B), A15(C) A/C Control Assembly
P28 Passenger Airbag ON–OFF Indicator Passenger Seat Belt Warning Light
R 1(A), R 2(B) Radio and Player

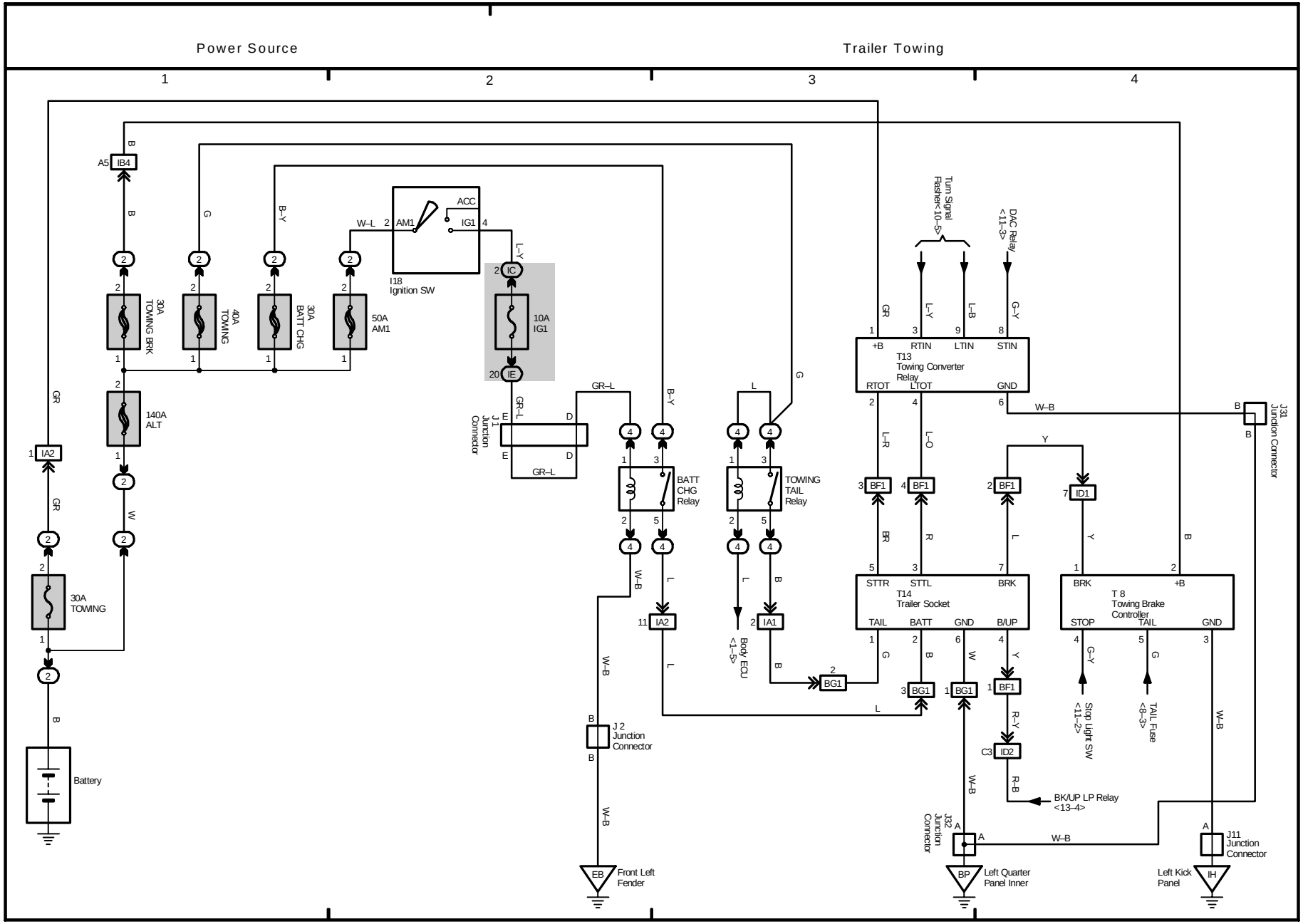
Power Source
Trailer Towing
1
2
3
4
A5 IB4
30A TOWING BRK
40A TOWING
30A BATT CHG
50A AM1
140A ALT
30A TOWING
Battery
IA2
I18 Ignition SW
ACC
AM1
IG1
IC
IE
10A IG1
J1 Junction Connector
BATT CHG Relay
TOWING TAIL Relay
J 2 Junction Connector
Front Left Fender
Body ECU <1–5>
BG1
IA1
Turn Signal Flasher<10–5>
DAC Relay <11–3>
T13 Towing Converter Relay
+B
RTIN
LTIN
STIN
RTOT
LTOT
GND
BF1
ID1
T14 Trailer Socket
STTR
STTL
BRK
TAIL
BATT
GND
B/UP
T 8 Towing Brake Controller
STOP
TAIL
GND
Stop Light SW <11–2>
TAIL Fuse <8–3>
C3 ID2
BK/UP LP Relay <13–4>
J32 Junction Connector
Left Quarter Panel Inner
J31 Junction Connector
J11 Junction Connector
Left Kick Panel

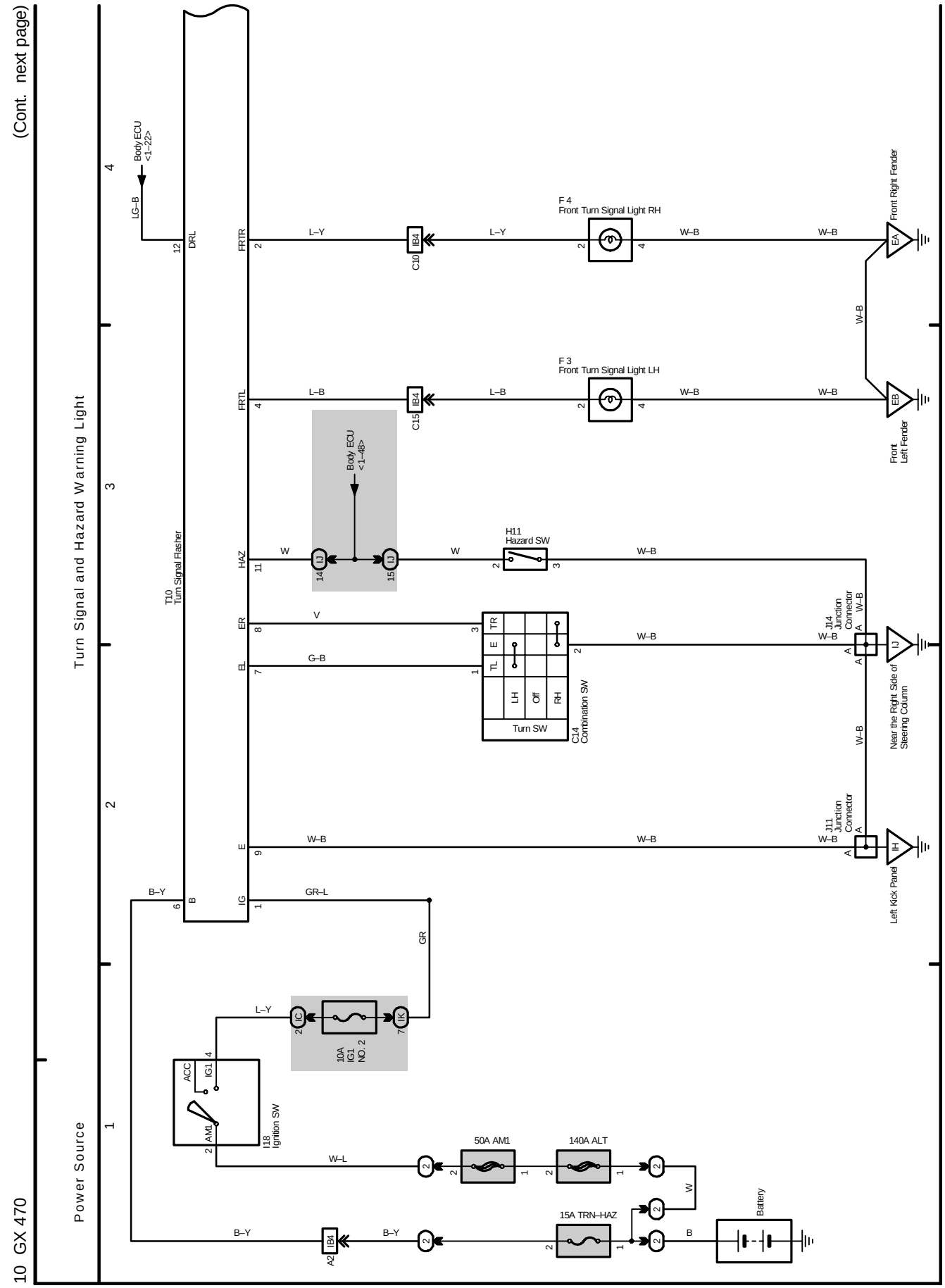
(Cont. next page)
Turn Signal and Hazard Warning Light
Power Source
Body ECU <1~22>
LG–B
T10 Turn Signal Flasher
DRL
FRTR
FRTL
HAZ
ER
EL
E
IG
L–Y
L–B
W
V
G–B
W–B
B–Y
GR–L
GR
C10 IB4
C15 IB4
F 4 Front Turn Signal Light RH
F 3 Front Turn Signal Light LH
Front Right Fender
Front Left Fender
EA
EB
Body ECU <1~48>
14 IJ
15 IJ
H11 Hazard SW
C14 Combination SW
TR
E
TL
LH
Off
RH
Turn SW
J14 Junction Connector
J11 Junction Connector
Near the Right Side of Steering Column
Left Kick Panel
IJ
IH
10A IG1 NO. 2
2 IC
7 IK
I18 Ignition SW
ACC
IG1
AM1
50A AM1
140A ALT
15A TRN–HAZ
A2 IB4
Battery
B
1
2
3
4

Turn Signal and Hazard Warning Light

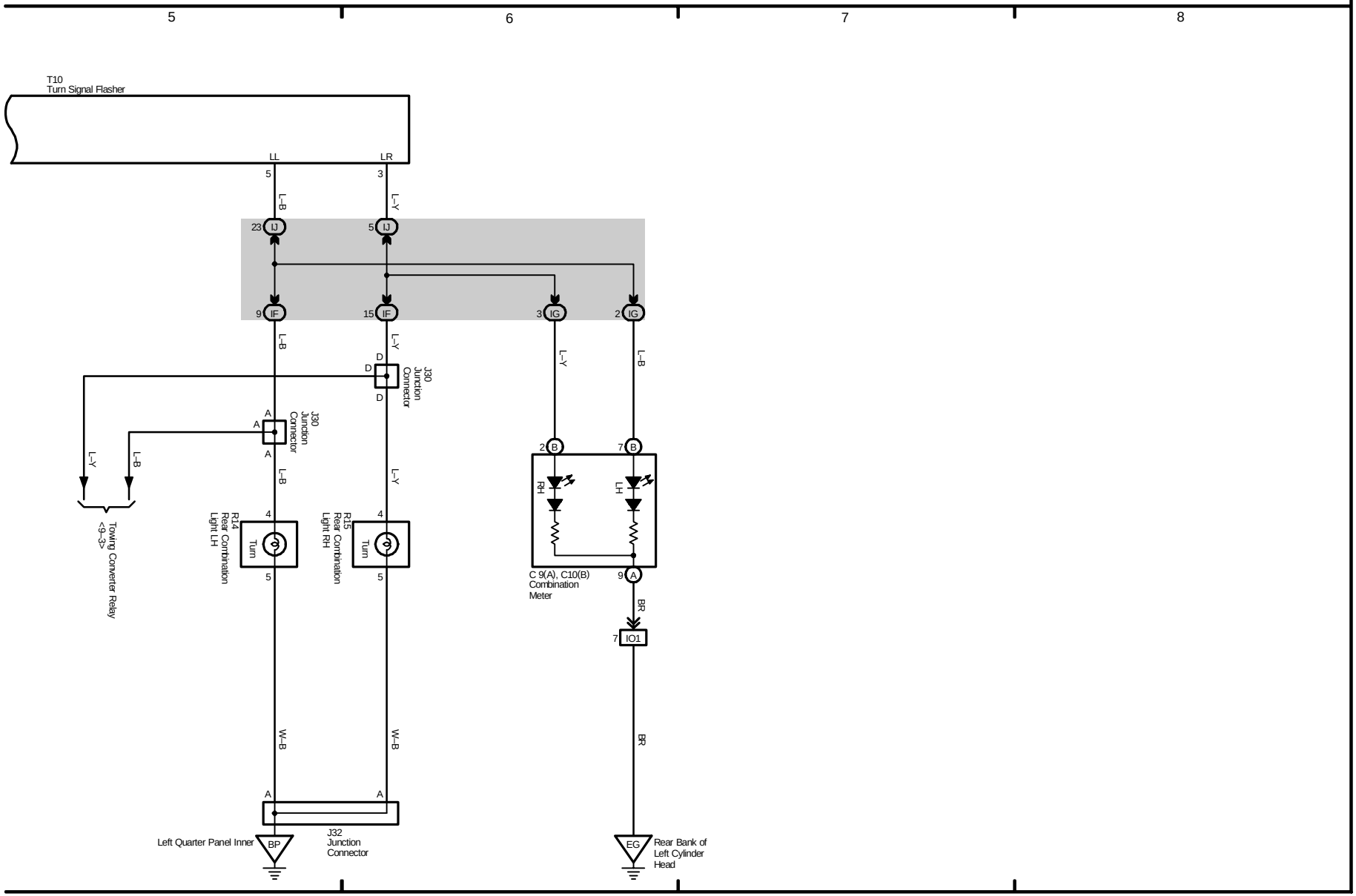

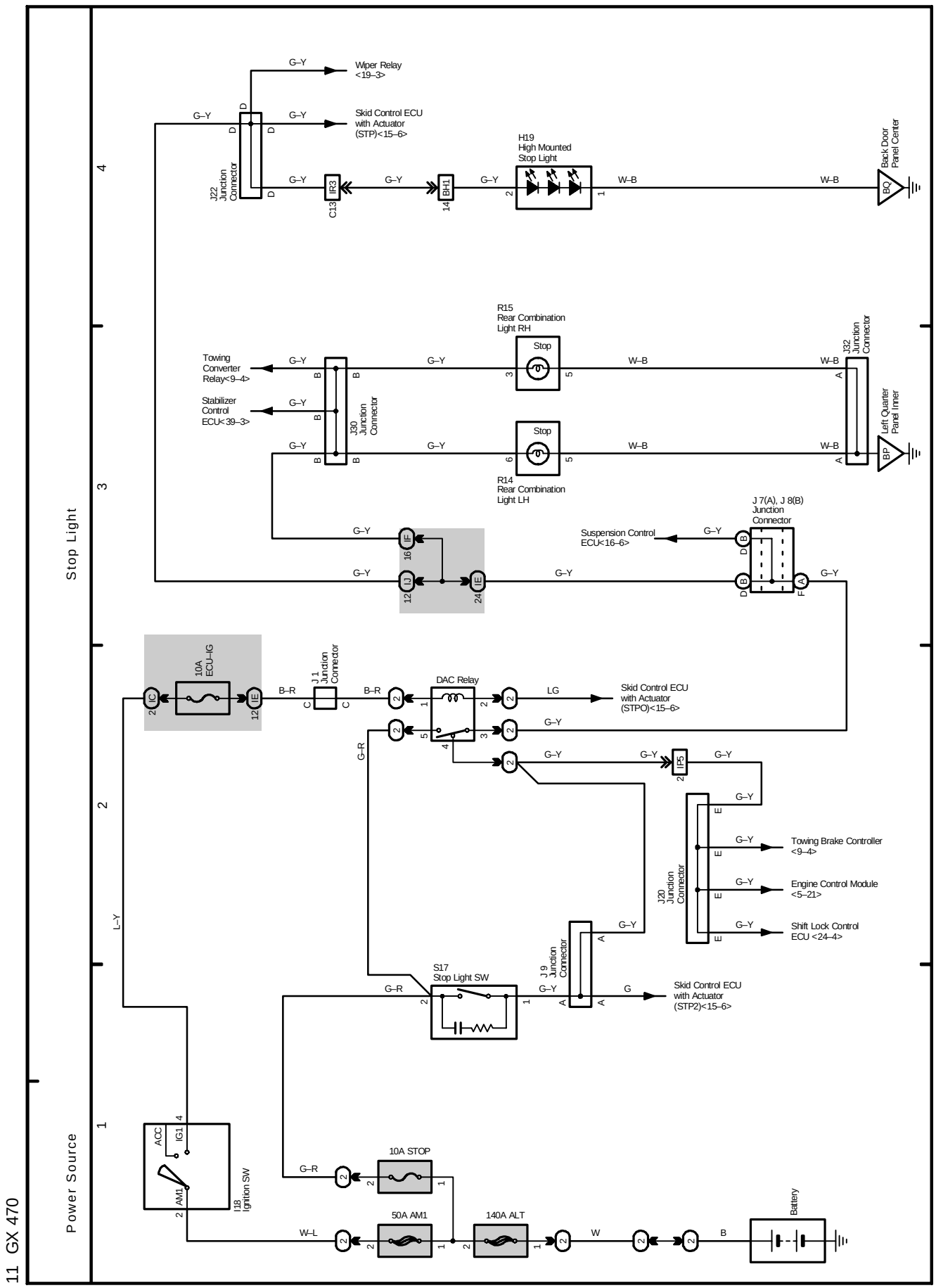
Stop Light
Power Source
Wiper Relay <19–3>
Skid Control ECU with Actuator (STP)<15–6>
J22 Junction Connector
IR3
C13
BH1
14
H19 High Mounted Stop Light
Back Door Panel Center
BQ
R15 Rear Combination Light RH
Stop
Towing Converter Relay<9–4>
Stabilizer Control ECU<39–3>
J30 Junction Connector
J32 Junction Connector
Left Quarter Panel Inner
BP
R14 Rear Combination Light LH
J 7(A), J 8(B) Junction Connector
Suspension Control ECU<16–6>
IE
16
IJ
12
24
10A ECU–IG
IC
J 1 Junction Connector
DAC Relay
Skid Control ECU with Actuator (STPO)<15–6>
IP5
J20 Junction Connector
Towing Brake Controller <9–4>
Engine Control Module <5–21>
Shift Lock Control ECU <24–4>
J 9 Junction Connector
S17 Stop Light SW
Skid Control ECU with Actuator (STP2)<15–6>
I18 Ignition SW
ACC
IG1
AM1
10A STOP
50A AM1
140A ALT
Battery

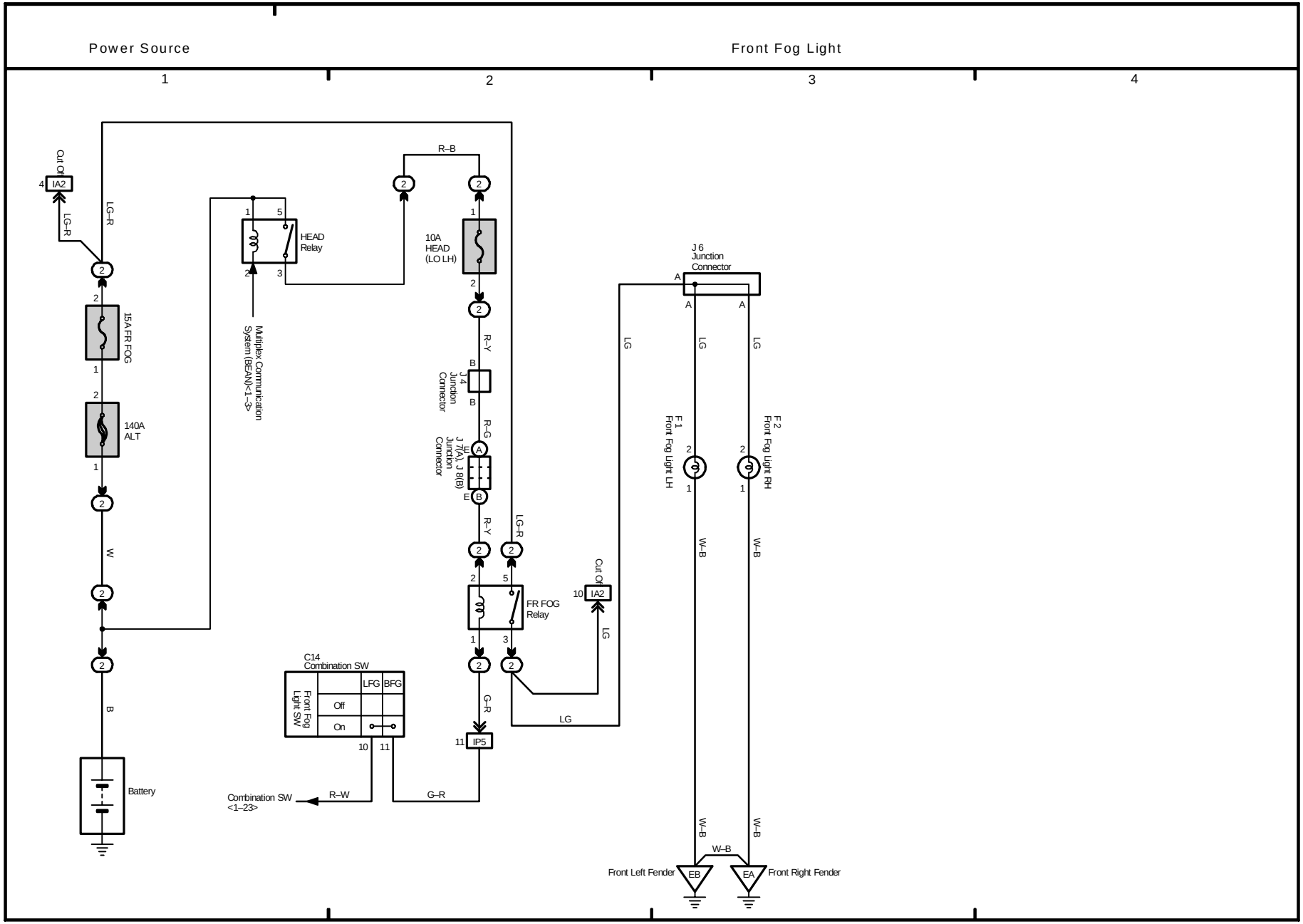
Power Source
Front Fog Light
1
2
3
4
Cut Off
IA2
LG–R
15A FR FOG
140A
ALT
W
B
Battery
HEAD
Relay
Multiplex Communication
System (BEAN)<1–3>
R–B
10A
HEAD
(LO LH)
R–Y
J 4
Junction
Connector
R–G
J 7(A), J 8(B)
Junction
Connector
FR FOG
Relay
G–R
IP5
C14
Combination SW
LFG
BFG
Front Fog
Light SW
Off
On
Combination SW
<1–23>
R–W
G–R
J 6
Junction
Connector
LG
F 1
Front Fog Light LH
F 2
Front Fog Light RH
W–B
Front Left Fender
EB
EA
Front Right Fender

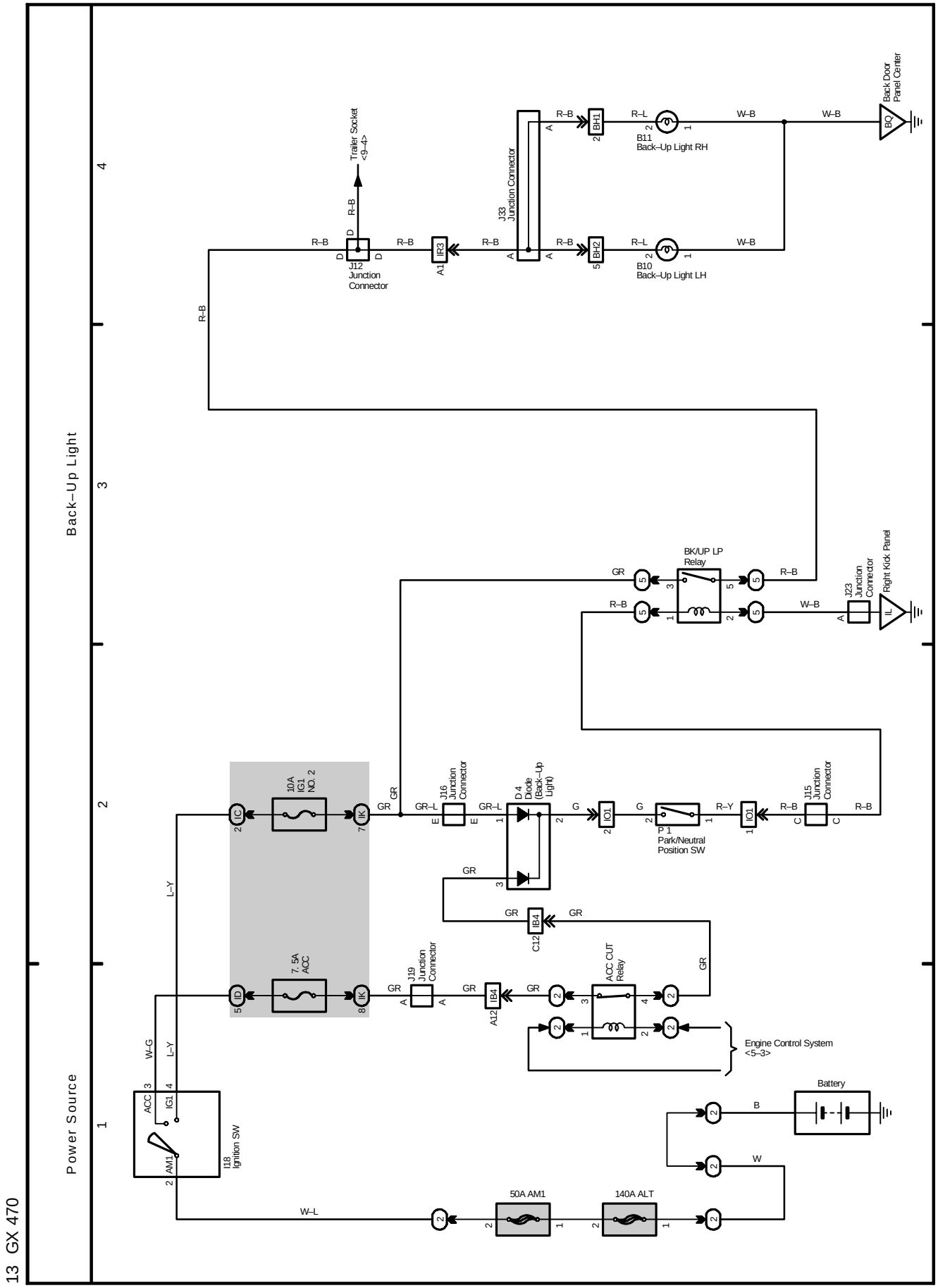
Back–Up Light
Power Source
Trailer Socket <9–4>
J12 Junction Connector
IR3
J33 Junction Connector
BH1
BH2
B11 Back–Up Light RH
B10 Back–Up Light LH
Back Door Panel Center
BQ
BK/UP LP Relay
J23 Junction Connector
Right Kick Panel
IL
10A IG1 NO. 2
7. 5A ACC
J16 Junction Connector
D 4 Diode (Back–Up Light)
IO1
P 1 Park/Neutral Position SW
J15 Junction Connector
IB4
C12
J19 Junction Connector
A12
ACC CUT Relay
Engine Control System <5–3>
Battery
I18 Ignition SW
50A AM1
140A ALT

(Cont. next page)

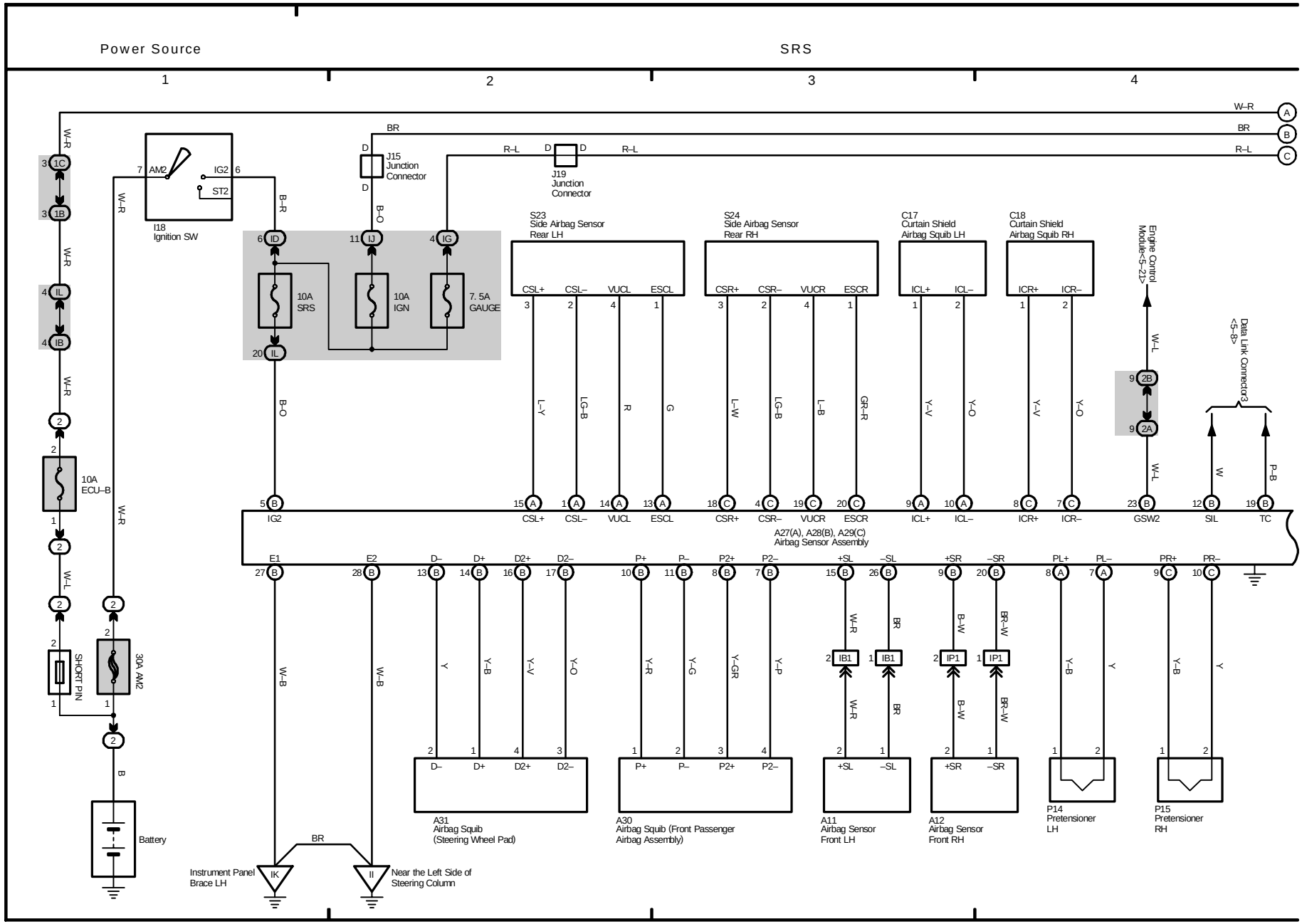

14 GX 470 (Cont' d)

(Cont. next page)

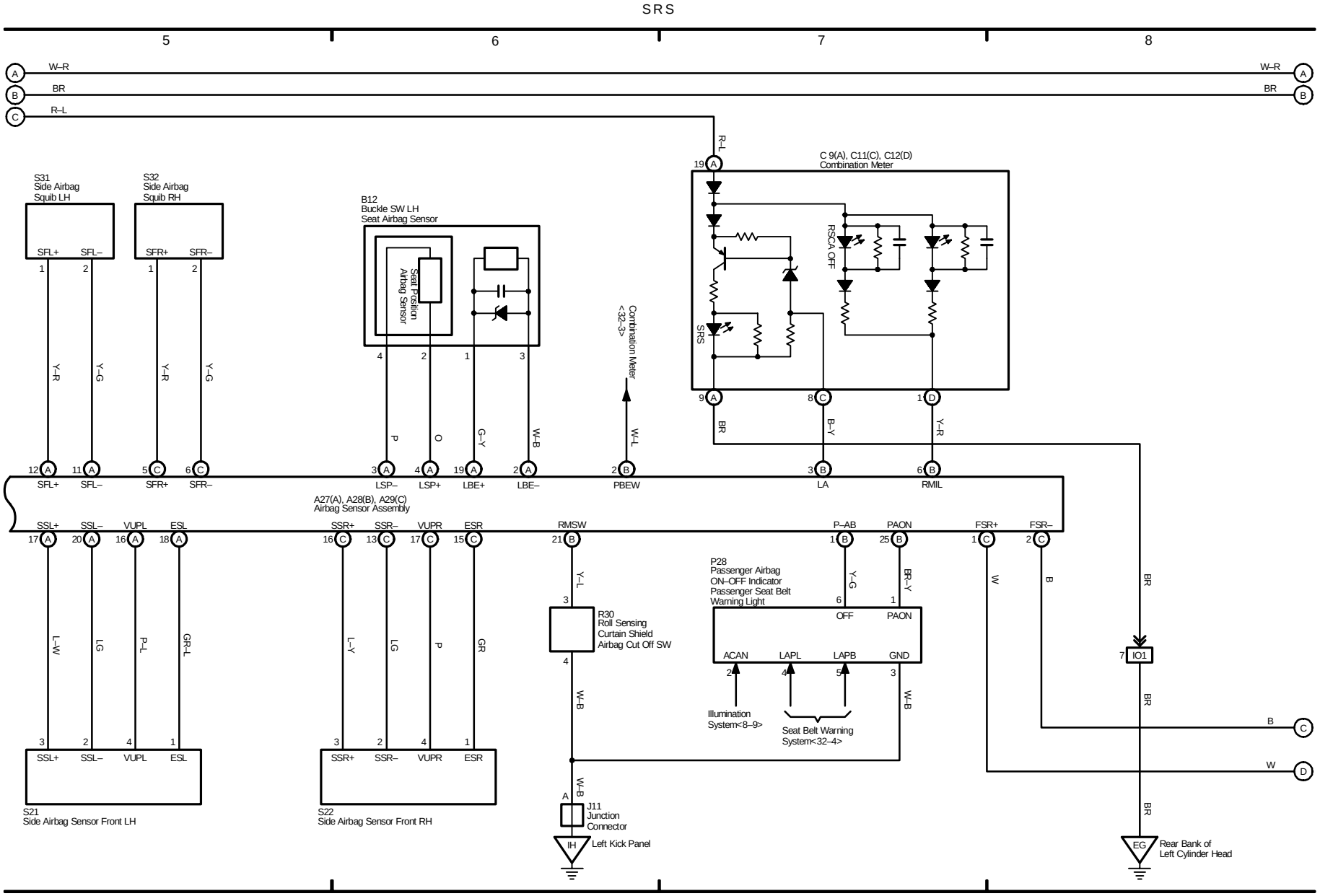

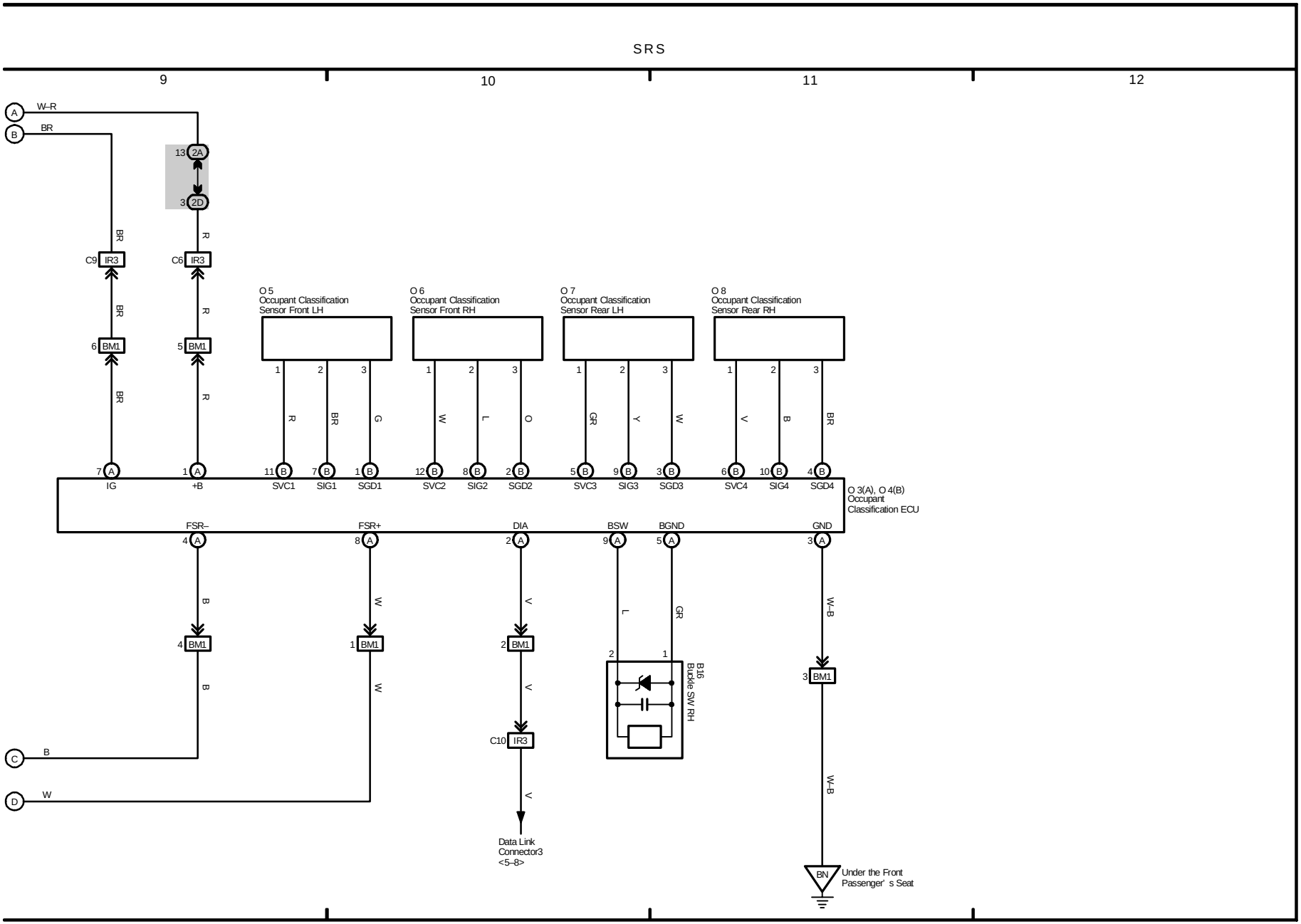
SRS
9
10
11
12
W–R
BR
13 2A
3 2D
C9 IR3
C6 IR3
6 BM1
5 BM1
O 5
Occupant Classification
Sensor Front LH
O 6
Occupant Classification
Sensor Front RH
O 7
Occupant Classification
Sensor Rear LH
O 8
Occupant Classification
Sensor Rear RH
IG
+B
SVC1
SIG1
SGD1
SVC2
SIG2
SGD2
SVC3
SIG3
SGD3
SVC4
SIG4
SGD4
O 3(A), O 4(B)
Occupant
Classification ECU
FSR–
FSR+
DIA
BSW
BGND
GND
4 BM1
1 BM1
2 BM1
C10 IR3
B16
Buckle SW RH
3 BM1
Data Link
Connector3
<5–8>
BN
Under the Front
Passenger' s Seat

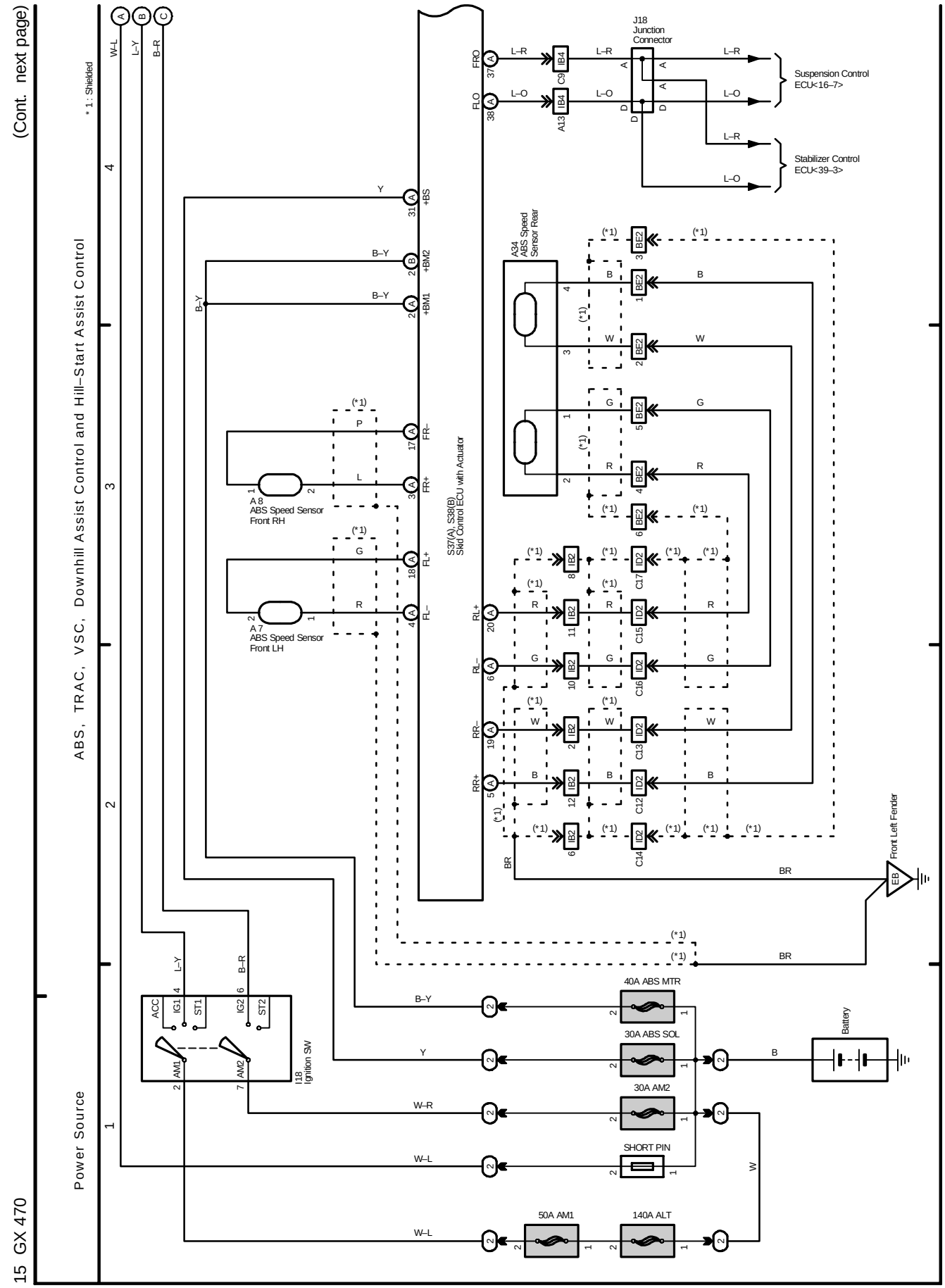
(Cont. next page)
ABS, TRAC, VSC, Downhill Assist Control and Hill–Start Assist Control
Power Source
* 1 : Shielded
J18
Junction
Connector
Suspension Control
ECU<16–7>
Stabilizer Control
ECU<39–3>
A34
ABS Speed
Sensor Rear
S37(A), S38(B)
Skid Control ECU with Actuator
A 8
ABS Speed Sensor
Front RH
A 7
ABS Speed Sensor
Front LH
Front Left Fender
I18
Ignition SW
40A ABS MTR
30A ABS SOL
30A AM2
SHORT PIN
50A AM1
140A ALT
Battery

(Cont. next page)

ABS, TRAC, VSC, Downhill Assist Control and Hill–Start Assist Control

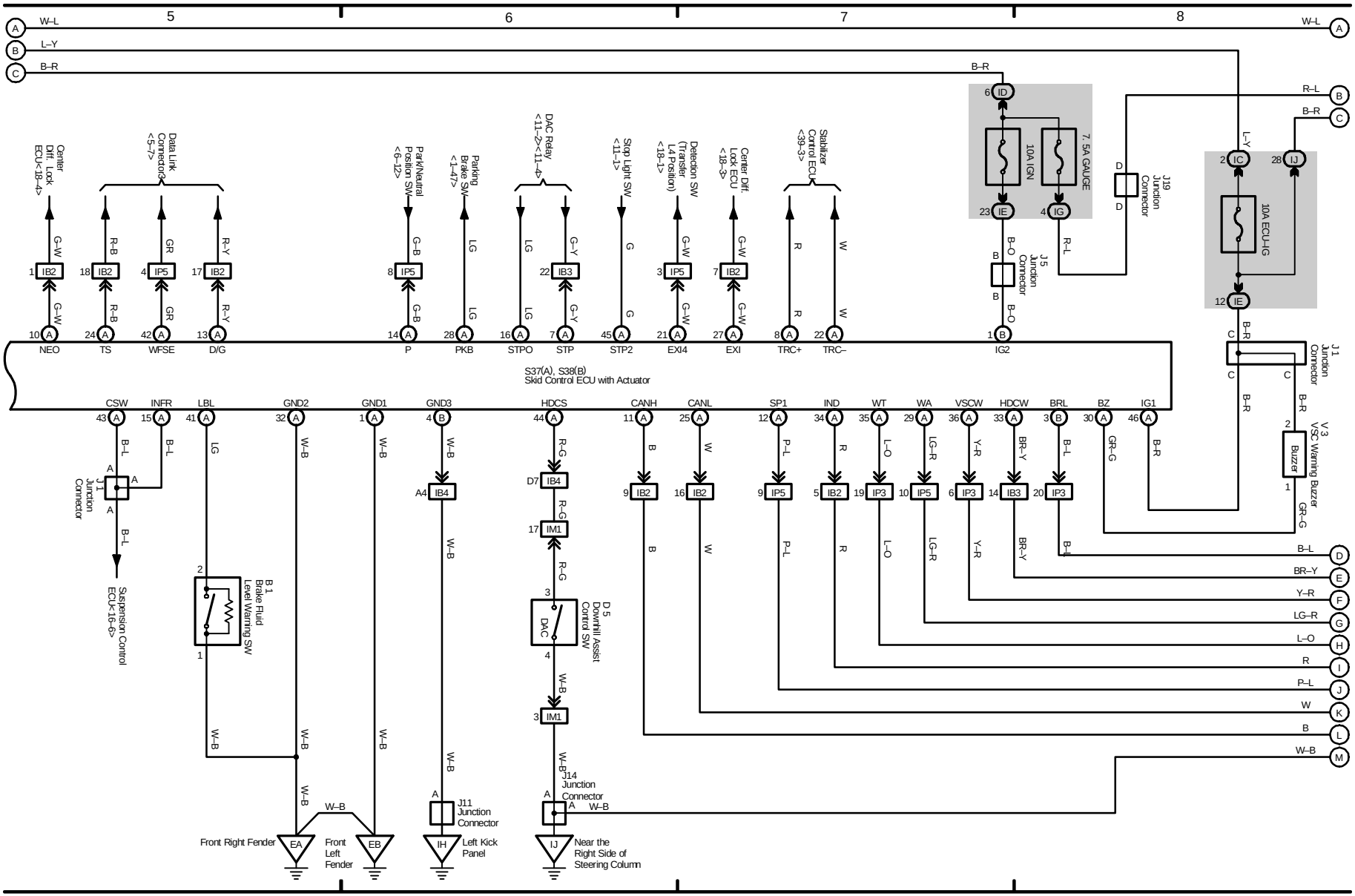

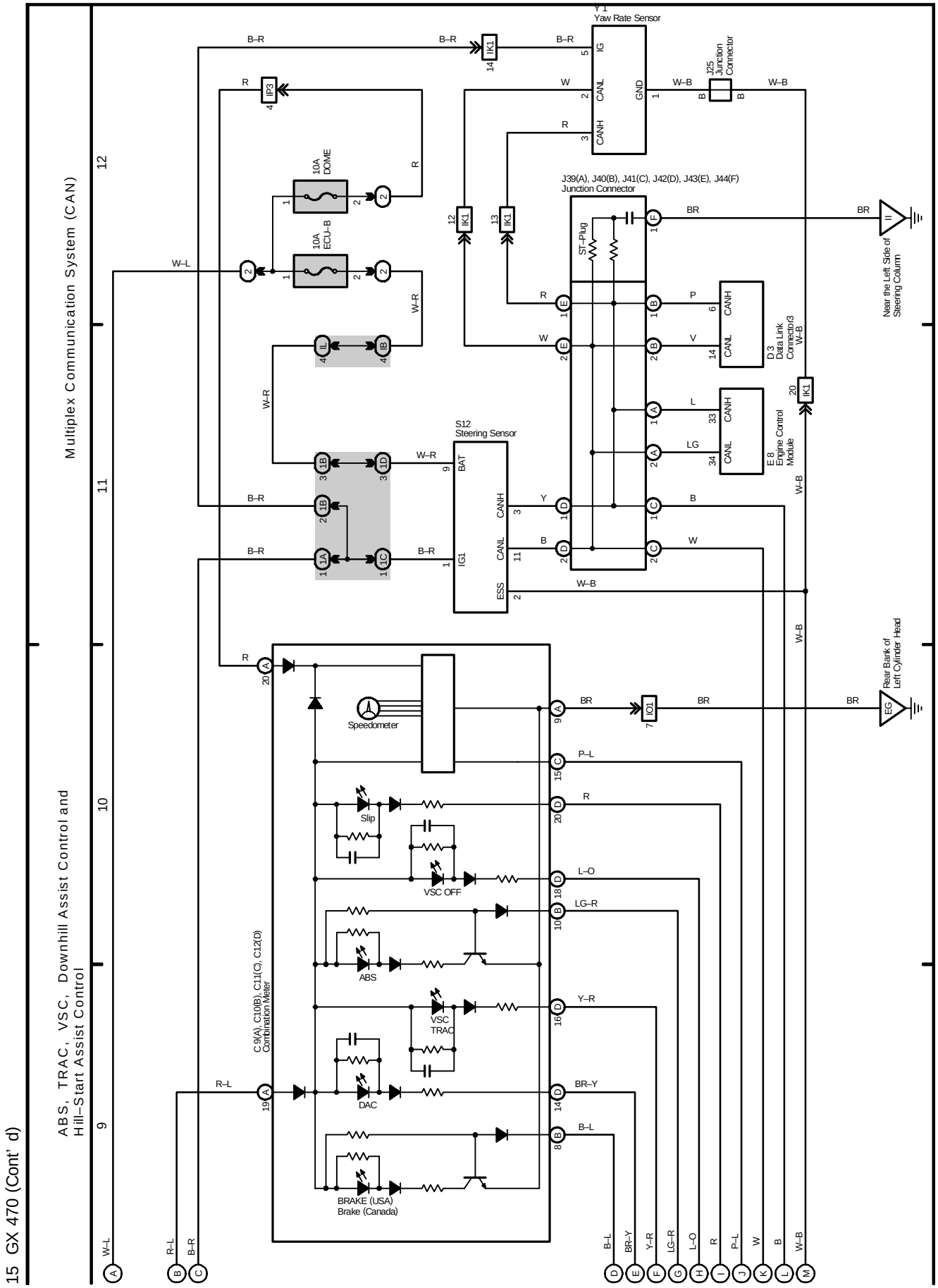
15 GX 470 (Cont' d)
ABS, TRAC, VSC, Downhill Assist Control and Hill–Start Assist Control
Multiplex Communication System (CAN)
Y 1 Yaw Rate Sensor
J25 Junction Connector
J39(A), J40(B), J41(C), J42(D), J43(E), J44(F) Junction Connector
ST–Plug
D 3 Data Link Connector3 W–B
E 8 Engine Control Module
S12 Steering Sensor
Near the Left Side of Steering Column
Rear Bank of Left Cylinder Head
10A DOME
10A ECU–B
IP3
IK1
IO1
Speedometer
Slip
VSC OFF
ABS
VSC TRAC
DAC
BRAKE (USA) Brake (Canada)
C 9(A), C10(B), C11(C), C12(D) Combination Meter

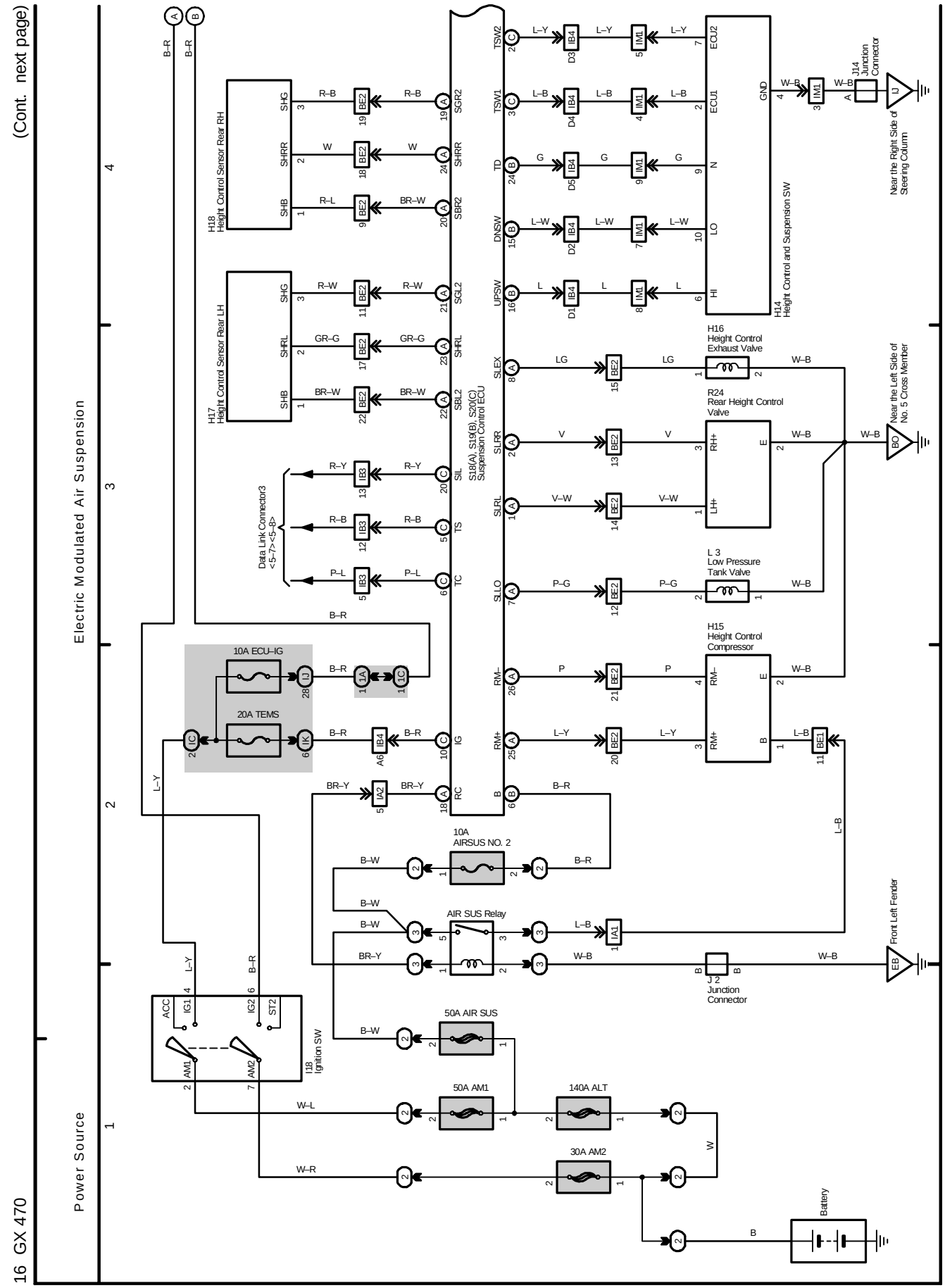
(Cont. next page)
Electric Modulated Air Suspension
Power Source
H18
Height Control Sensor Rear RH
H17
Height Control Sensor Rear LH
Data Link Connector3
<5-7><5-8>
S18(A), S19(B), S20(C)
Suspension Control ECU
H14
Height Control and Suspension SW
H16
Height Control
Exhaust Valve
R24
Rear Height Control
Valve
L 3
Low Pressure
Tank Valve
H15
Height Control
Compressor
J14
Junction
Connector
Near the Right Side of
Steering Column
Near the Left Side of
No. 5 Cross Member
Front Left Fender
10A ECU–IG
20A TEMS
10A
AIRSUS NO. 2
AIR SUS Relay
J 2
Junction
Connector
50A AIR SUS
50A AM1
140A ALT
30A AM2
I18
Ignition SW
Battery

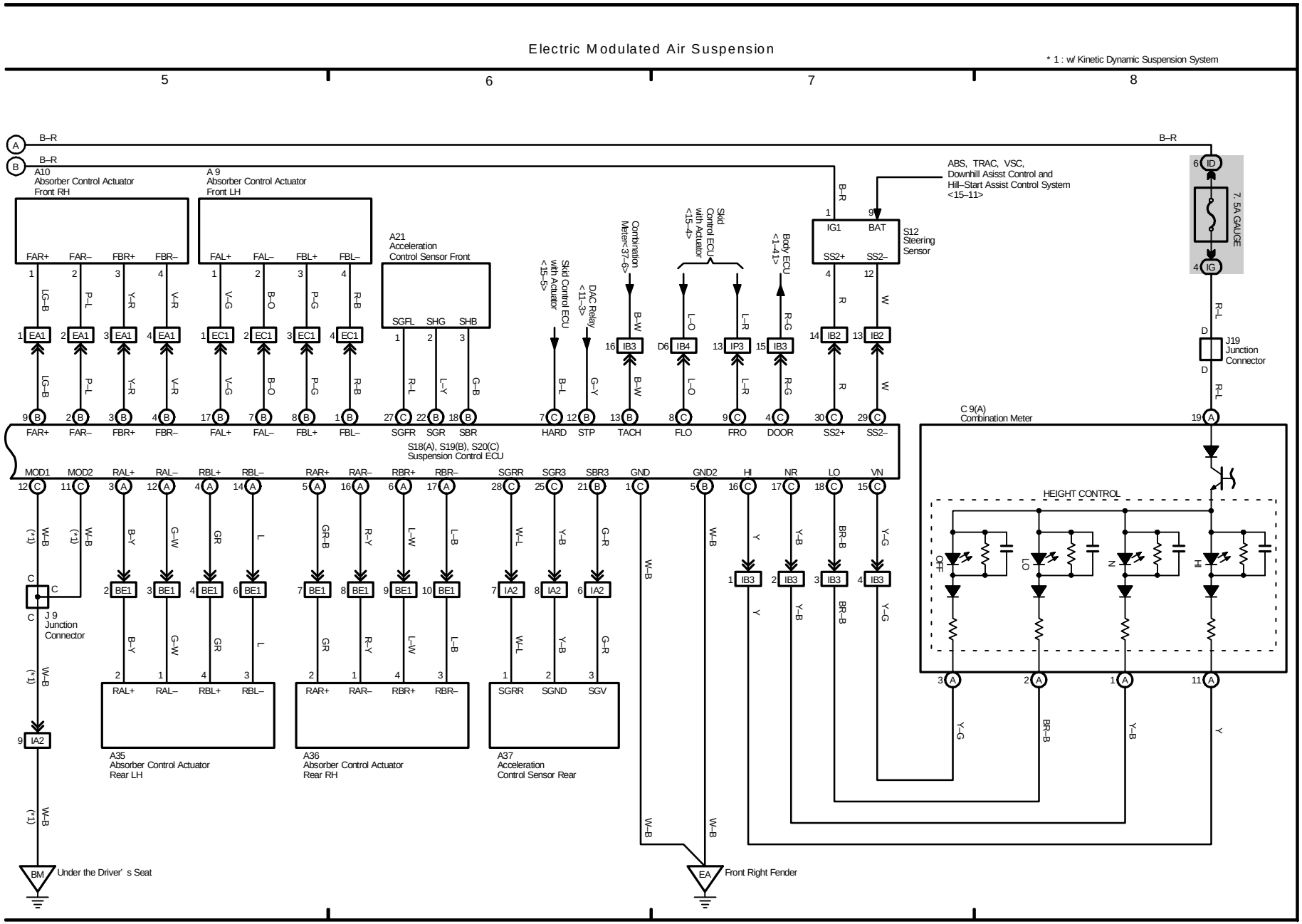
Electric Modulated Air Suspension
* 1 : w/ Kinetic Dynamic Suspension System
5
6
7
8
A10
Absorber Control Actuator
Front RH
A 9
Absorber Control Actuator
Front LH
A21
Acceleration
Control Sensor Front
Skid Control ECU
with Actuator
<15–5>
DAC Relay
<11–3>
Combination
Meter<37–6>
Skid
Control ECU
with Actuator
<15–4>
Body ECU
<1–41>
ABS, TRAC, VSC,
Downhill Asisst Control and
Hill–Start Assist Control System
<15–11>
S12
Steering
Sensor
7. 5A GAUGE
J19
Junction
Connector
C 9(A)
Combination Meter
HEIGHT CONTROL
OFF
LO
N
H
S18(A), S19(B), S20(C)
Suspension Control ECU
J 9
Junction
Connector
A35
Absorber Control Actuator
Rear LH
A36
Absorber Control Actuator
Rear RH
A37
Acceleration
Control Sensor Rear
Under the Driver' s Seat
Front Right Fender

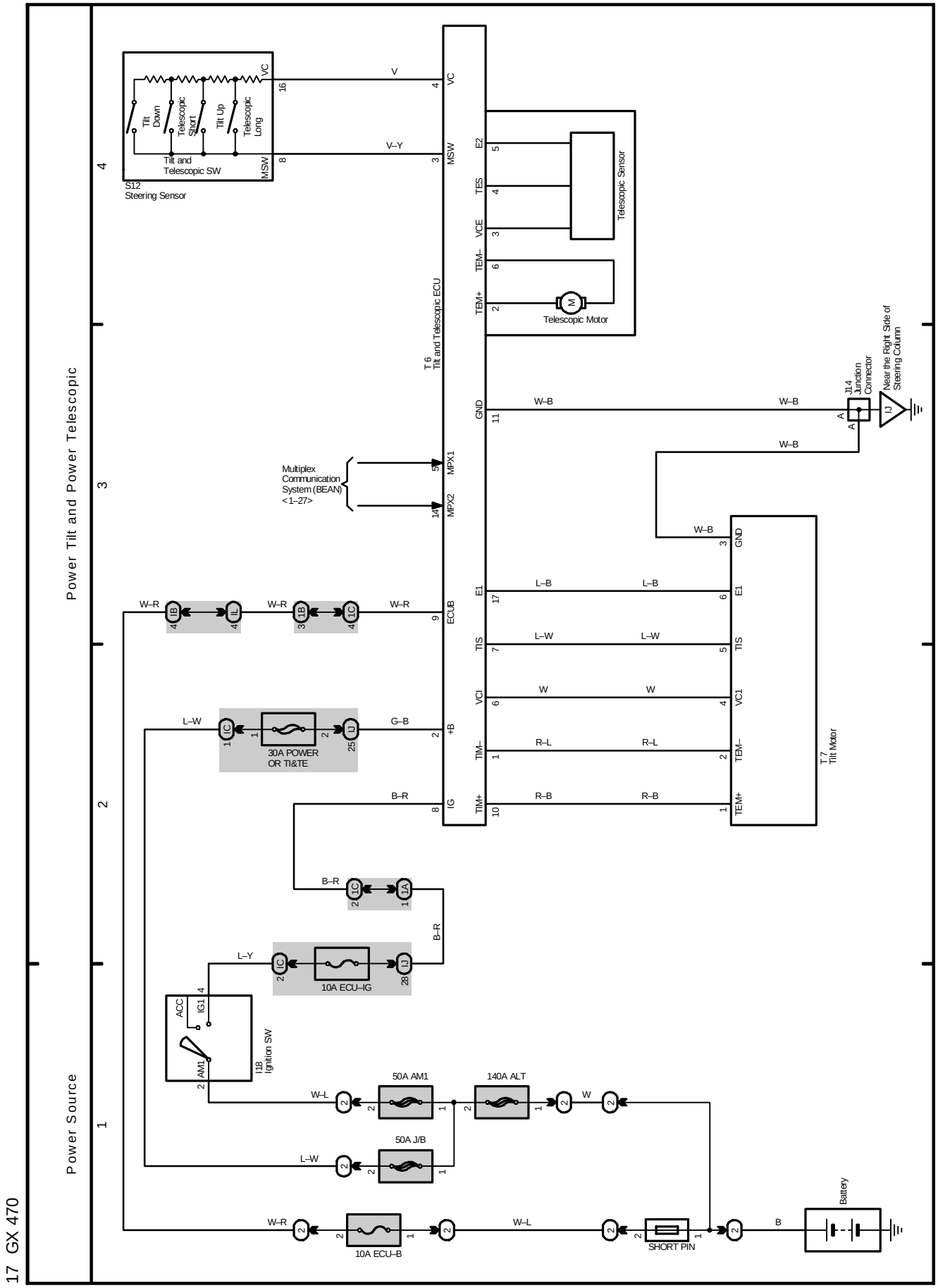
Power Tilt and Power Telescopic
Power Source
S12
Steering Sensor
Tilt Down
Telescopic Short
Tilt Up
Telescopic Long
Tilt and Telescopic SW
VC
MSW
V
V–Y
T 6
Tilt and Telescopic ECU
E2
TES
VCE
TEM–
TEM+
GND
MPX1
MPX2
ECUB
TIS
VCI
TIM–
TIM+
+B
IG
Telescopic Sensor
Telescopic Motor
Multiplex Communication System (BEAN) <1–27>
W–B
J14 Junction Connector
Near the Right Side of Steering Column
L–B
L–W
W
R–L
R–B
T 7
Tilt Motor
E1
W–R
G–B
B–R
L–Y
30A POWER OR TI&TE
10A ECU–IG
ACC
IG1
AM1
I18 Ignition SW
50A AM1
140A ALT
50A J/B
W–L
L–W
10A ECU–B
SHORT PIN
B
Battery

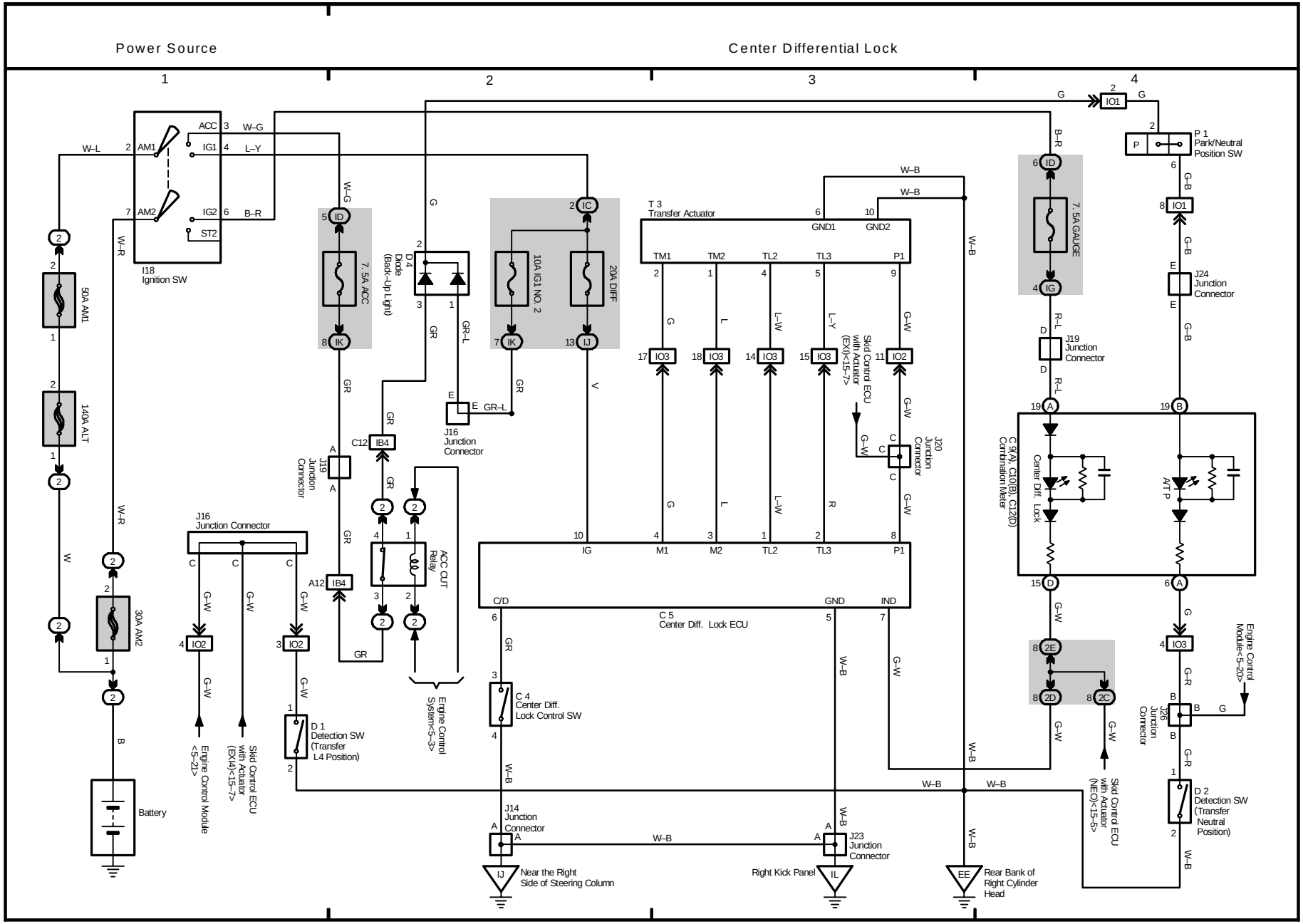
Power Source
Center Differential Lock
1
2
3
4
I18 Ignition SW
ACC
IG1
IG2
ST2
AM1
AM2
50A AM1
140A ALT
30A AM2
Battery
7. 5A ACC
D 4 Diode (Back–Up Light)
10A IG1 NO. 2
20A DIFF
J16 Junction Connector
J19 Junction Connector
J16 Junction Connector
ACC CUT Relay
Engine Control System<5–3>
Engine Control Module <5–21>
Skid Control ECU with Actuator (EXI4)<15–7>
D 1 Detection SW (Transfer L4 Position)
T 3 Transfer Actuator
GND1
GND2
TM1
TM2
TL2
TL3
P1
Skid Control ECU with Actuator (EXI)<15–7>
J20 Junction Connector
C 5 Center Diff. Lock ECU
IG
M1
M2
C/D
GND
IND
C 4 Center Diff. Lock Control SW
J14 Junction Connector
Near the Right Side of Steering Column
J23 Junction Connector
Right Kick Panel
Rear Bank of Right Cylinder Head
7. 5A GAUGE
C 9(A), C10(B), C12(D) Combination Meter
Center Diff. Lock
A/T P
Skid Control ECU with Actuator (NEO)<15–5>
P 1 Park/Neutral Position SW
J24 Junction Connector
J26 Junction Connector
Engine Control Module<5–20>
D 2 Detection SW (Transfer Neutral Position)

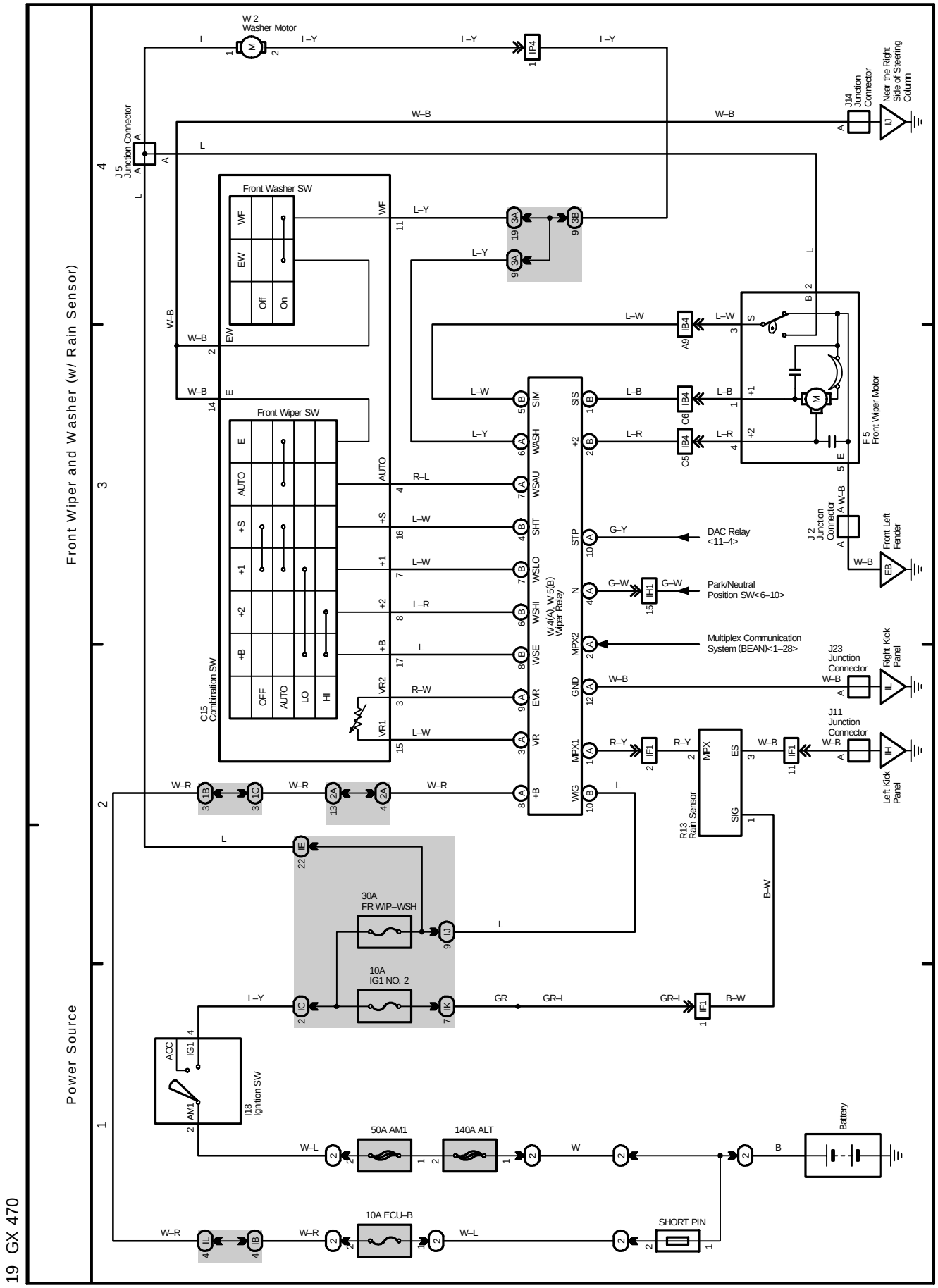
Front Wiper and Washer (w/ Rain Sensor)
Power Source
W 2
Washer Motor
J 5
Junction Connector
J14
Junction
Connector
Near the Right
Side of Steering
Column
Front Washer SW
WF
EW
Off
On
Front Wiper SW
E
AUTO
+S
+1
+2
+B
OFF
AUTO
LO
HI
C15
Combination SW
W 4(A), W 5(B)
Wiper Relay
SIM
WASH
WSAU
SHT
WSLO
WSHI
WSE
EVR
VR
+B
SS
+2
STP
N
MPX2
GND
MPX1
WG
F 5
Front Wiper Motor
J 2
Junction
Connector
Front Left
Fender
DAC Relay
<11–4>
Park/Neutral
Position SW<6–10>
Multiplex Communication
System (BEAN)<1–28>
J23
Junction
Connector
Right Kick
Panel
J11
Junction
Connector
Left Kick
Panel
R13
Rain Sensor
MPX
ES
SIG
30A
FR WIP–WSH
10A
IG1 NO. 2
I18
Ignition SW
ACC
IG1
AM1
50A AM1
140A ALT
Battery
10A ECU–B
SHORT PIN

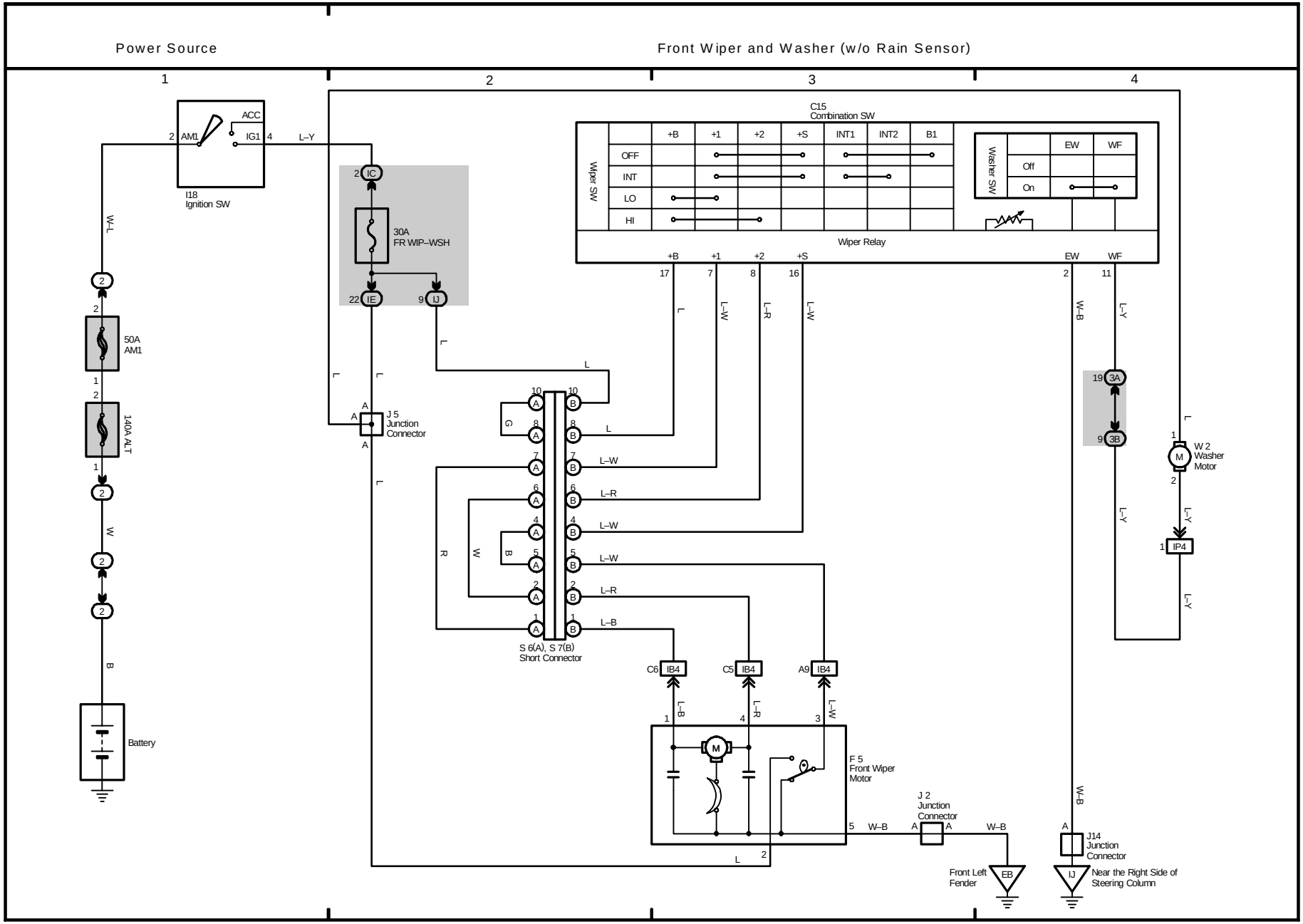
Power Source
Front Wiper and Washer (w/o Rain Sensor)
1
2
3
4
I18
Ignition SW
ACC
AM1
IG1
L–Y
W–L
50A
AM1
140A ALT
W
B
Battery
30A
FR WIP–WSH
IC
IE
IJ
J 5
Junction
Connector
C15
Combination SW
+B
+1
+2
+S
INT1
INT2
B1
OFF
INT
LO
HI
Wiper SW
Washer SW
EW
WF
Off
On
Wiper Relay
L
L–W
L–R
L–B
G
R
S 6(A), S 7(B)
Short Connector
C6
C5
A9
IB4
F 5
Front Wiper
Motor
J 2
Junction
Connector
W–B
Front Left
Fender
EB
J14
Junction
Connector
IJ
Near the Right Side of
Steering Column
3A
3B
W 2
Washer
Motor
IP4

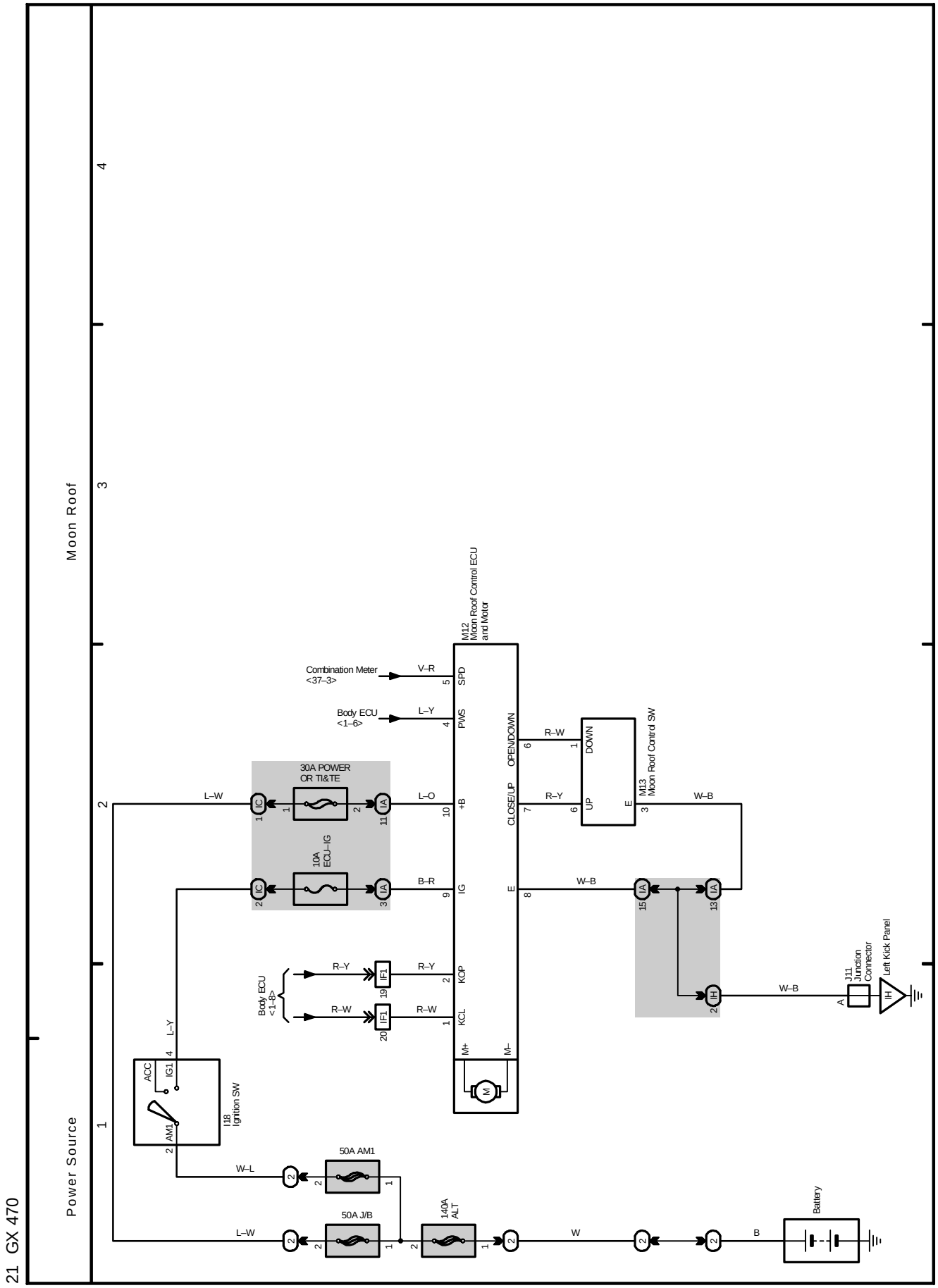
Moon Roof
Power Source
1
2
3
4
M12
Moon Roof Control ECU
and Motor
Combination Meter
<37–3>
V–R
SPD
Body ECU
<1–6>
L–Y
PWS
30A POWER
OR TI&TE
L–W
L–O
+B
10A
ECU–IG
B–R
IG
Body ECU
<1–4>
R–Y
R–W
KOP
KCL
M+
M–
OPEN/DOWN
CLOSE/UP
E
M13
Moon Roof Control SW
DOWN
UP
W–B
J11
Junction
Connector
Left Kick Panel
I18
Ignition SW
ACC
IG1
AM1
50A AM1
W–L
50A J/B
140A
ALT
W
B
Battery

21 GX 470

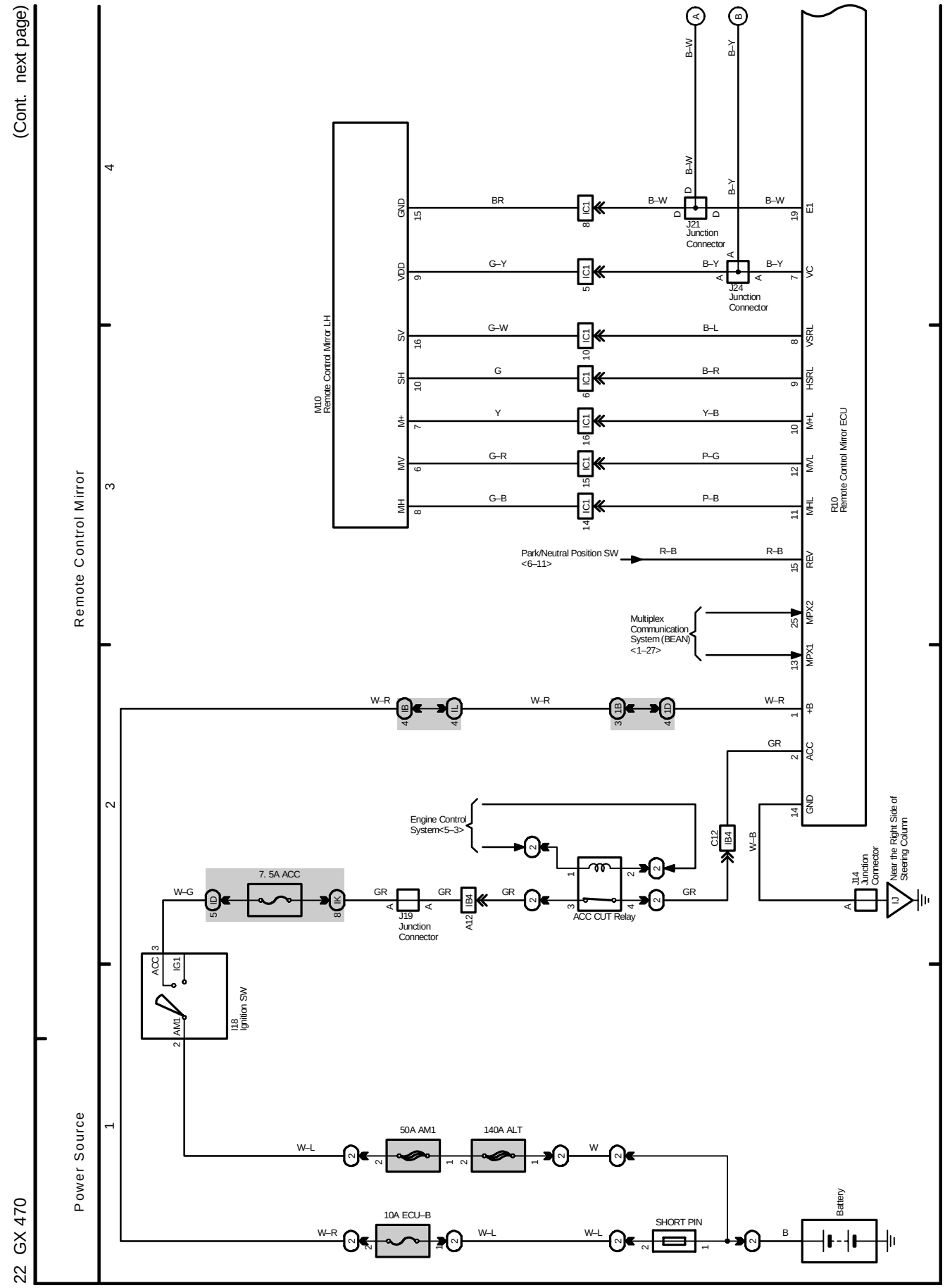
(Cont. next page)
Remote Control Mirror
Power Source
M10
Remote Control Mirror LH
GND
VDD
SV
SH
M+
MV
MH
BR
G–Y
G–W
G
Y
G–R
G–B
IC1
B–W
B–Y
J21
Junction
Connector
J24
Junction
Connector
B–L
B–R
Y–B
P–G
P–B
R10
Remote Control Mirror ECU
E1
VC
VSRL
HSRL
M+L
MVL
MHL
REV
MPX2
MPX1
+B
ACC
GND
Park/Neutral Position SW
<6–11>
R–B
Multiplex
Communication
System (BEAN)
<1–27>
W–R
GR
W–B
Engine Control
System<5–3>
C12
IB4
J14
Junction
Connector
Near the Right Side of
Steering Column
IJ
7. 5A ACC
W–G
ID
IK
J19
Junction
Connector
A12
ACC CUT Relay
ACC
IG1
AM1
I18
Ignition SW
50A AM1
140A ALT
W–L
W
10A ECU–B
SHORT PIN
B
Battery

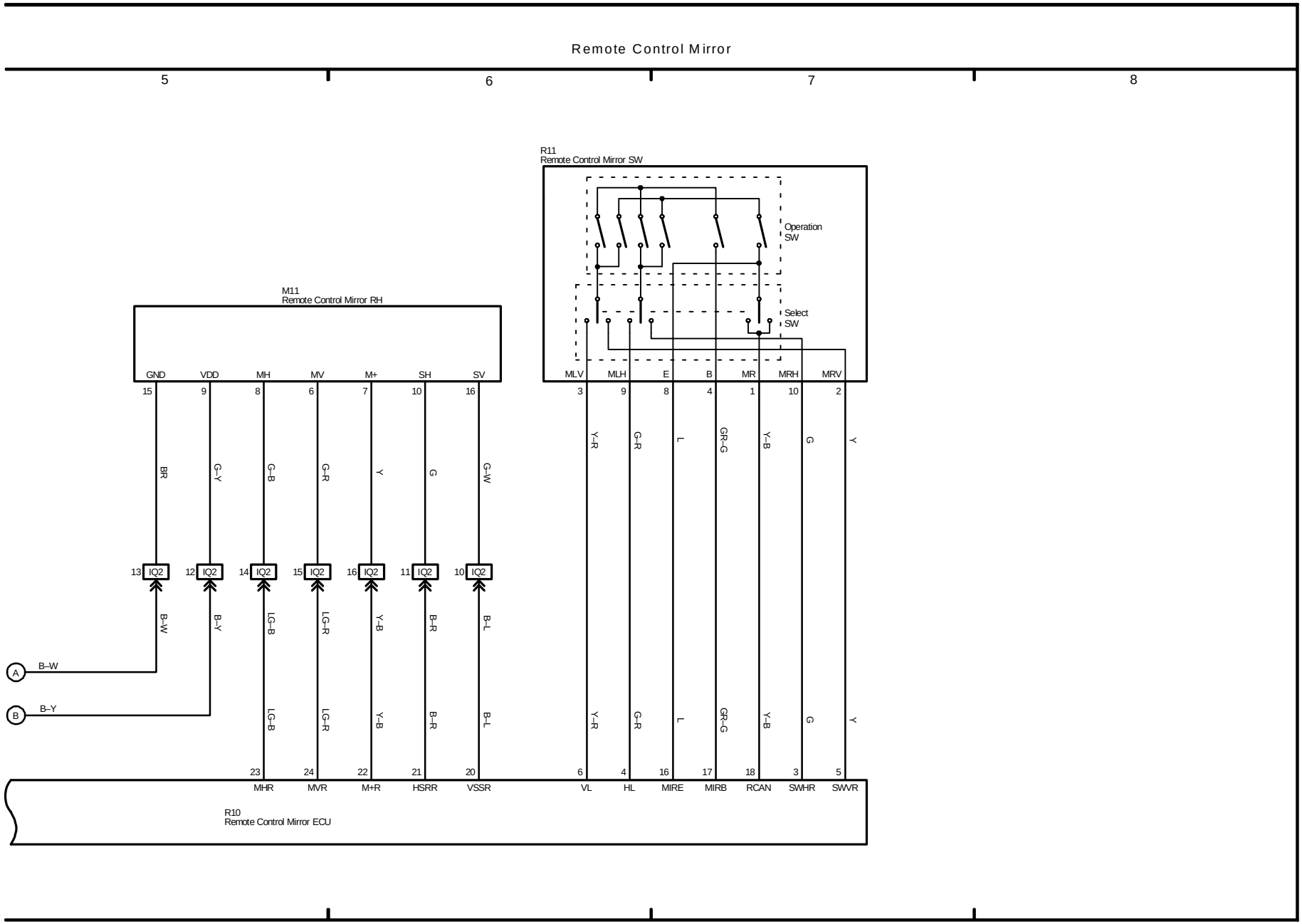
Remote Control Mirror
5
6
7
8
R11
Remote Control Mirror SW
Operation SW
Select SW
M11
Remote Control Mirror RH
GND
VDD
MH
MV
M+
SH
SV
MLV
MLH
E
B
MR
MRH
MRV
IQ2
B–W
B–Y
LG–B
LG–R
Y–B
B–R
B–L
Y–R
G–R
L
GR–G
G
Y
G–Y
G–W
BR
A
B
MHR
MVR
M+R
HSRR
VSSR
VL
HL
MIRE
MIRB
RCAN
SWHR
SWVR
R10
Remote Control Mirror ECU

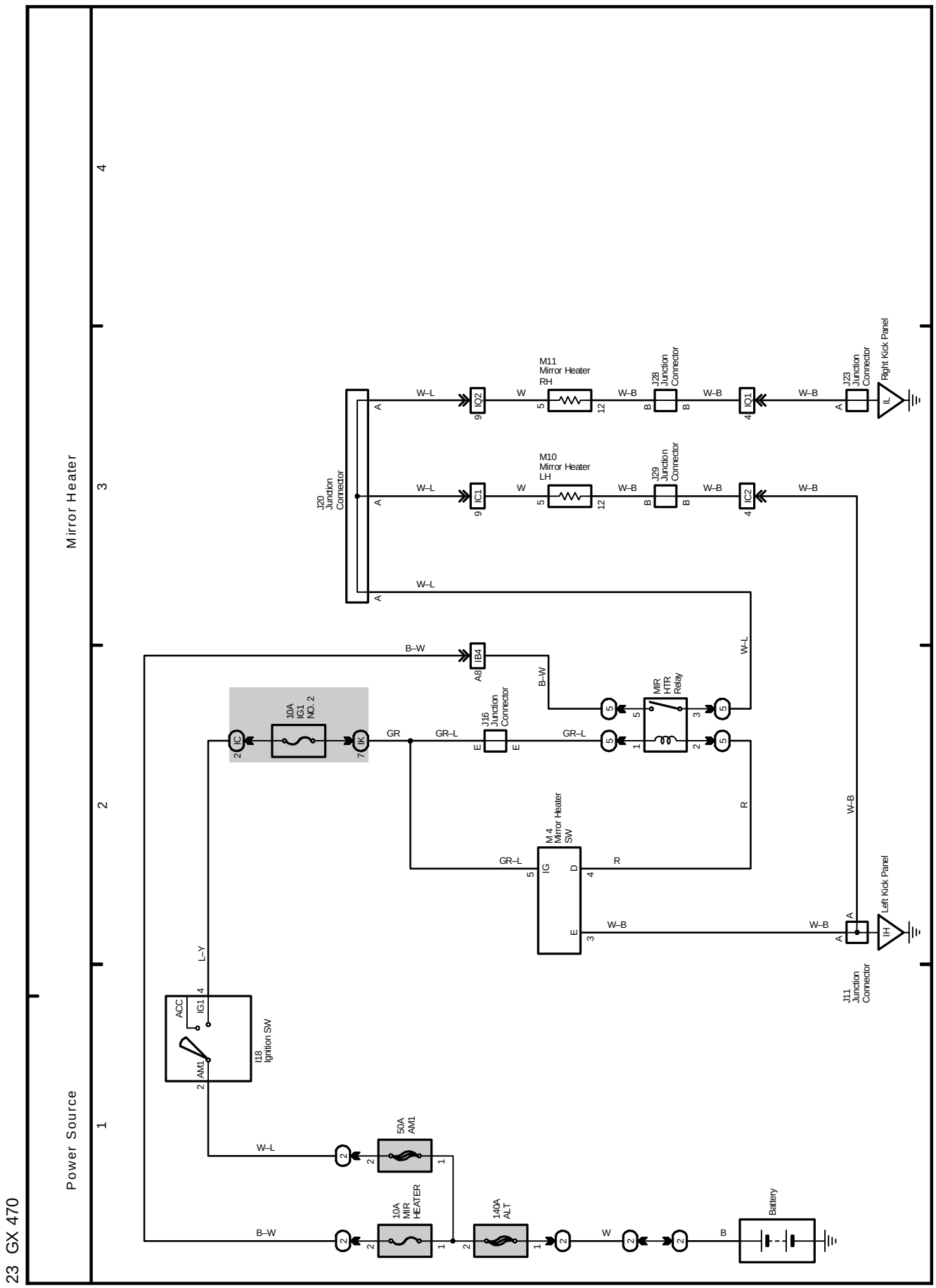
Mirror Heater
Power Source
1
2
3
4
J20 Junction Connector
M11 Mirror Heater RH
M10 Mirror Heater LH
J28 Junction Connector
J29 Junction Connector
J23 Junction Connector
Right Kick Panel
IQ2
IQ1
IC1
IC2
IB4
A8
J16 Junction Connector
MIR HTR Relay
10A IG1 NO. 2
IC
IK
M4 Mirror Heater SW
IG
D
E
J11 Junction Connector
Left Kick Panel
IH
IL
I18 Ignition SW
ACC
IG1
AM1
50A AM1
10A MIR HEATER
140A ALT
Battery
W–L
W
W–B
B–W
GR
GR–L
L–Y
R
B

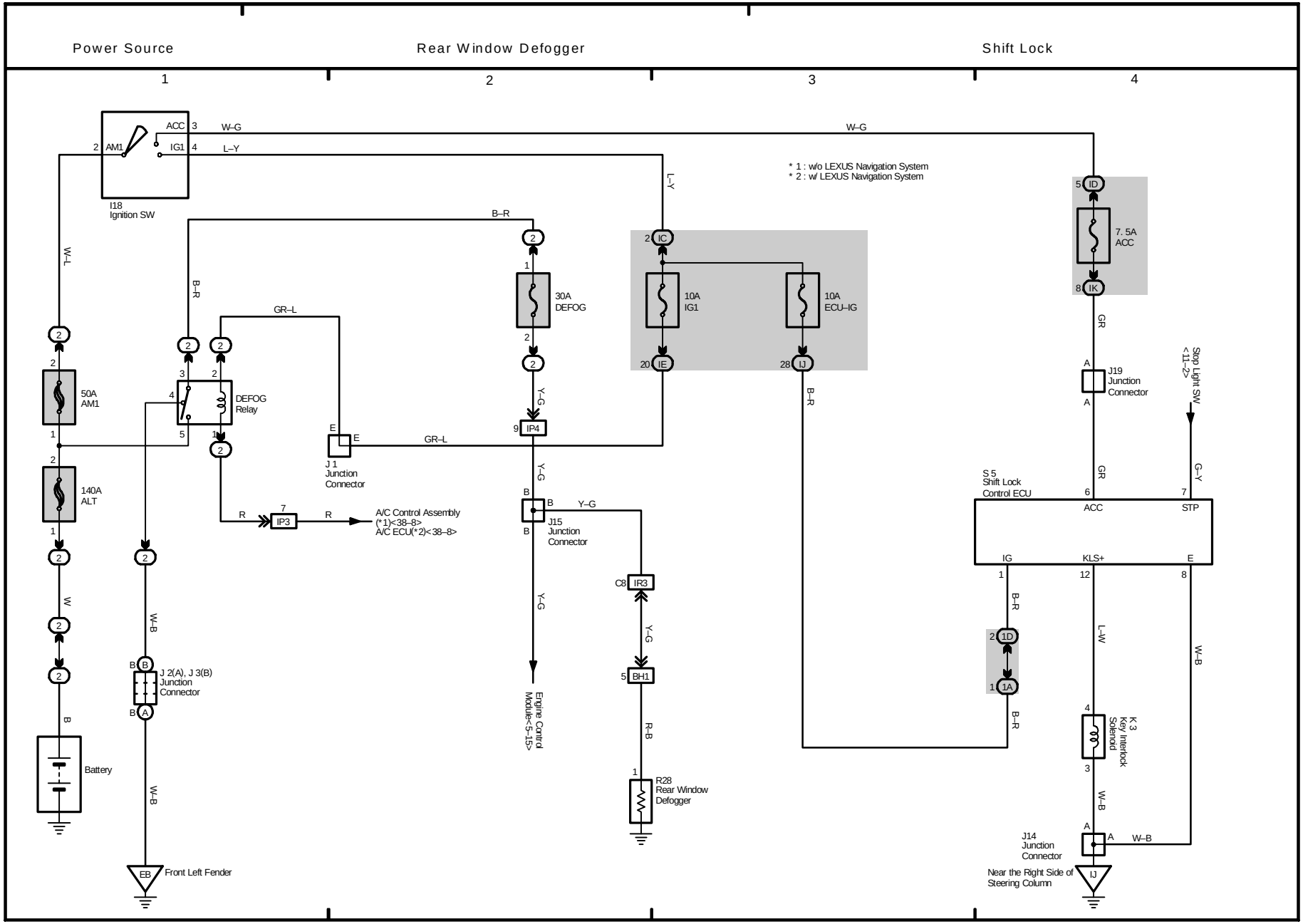
Power Source
Rear Window Defogger
Shift Lock
1
2
3
4
I18
Ignition SW
ACC
AM1
IG1
W–G
L–Y
* 1 : w/o LEXUS Navigation System
* 2 : w/ LEXUS Navigation System
W–L
B–R
GR–L
50A
AM1
140A
ALT
DEFOG
Relay
30A
DEFOG
10A
IG1
10A
ECU–IG
7. 5A
ACC
IP4
IP3
J 1
Junction
Connector
A/C Control Assembly
(*1)<38–8>
A/C ECU(*2)<38–8>
J15
Junction
Connector
Y–G
IR3
BH1
R–B
R28
Rear Window
Defogger
Engine Control
Module<5–15>
J19
Junction
Connector
GR
Stop Light SW
<11–2>
G–Y
S 5
Shift Lock
Control ECU
ACC
STP
IG
KLS+
E
1D
1A
L–W
W–B
K 3
Key Interlock
Solenoid
J14
Junction
Connector
Near the Right Side of
Steering Column
W
B
Battery
J 2(A), J 3(B)
Junction
Connector
Front Left Fender

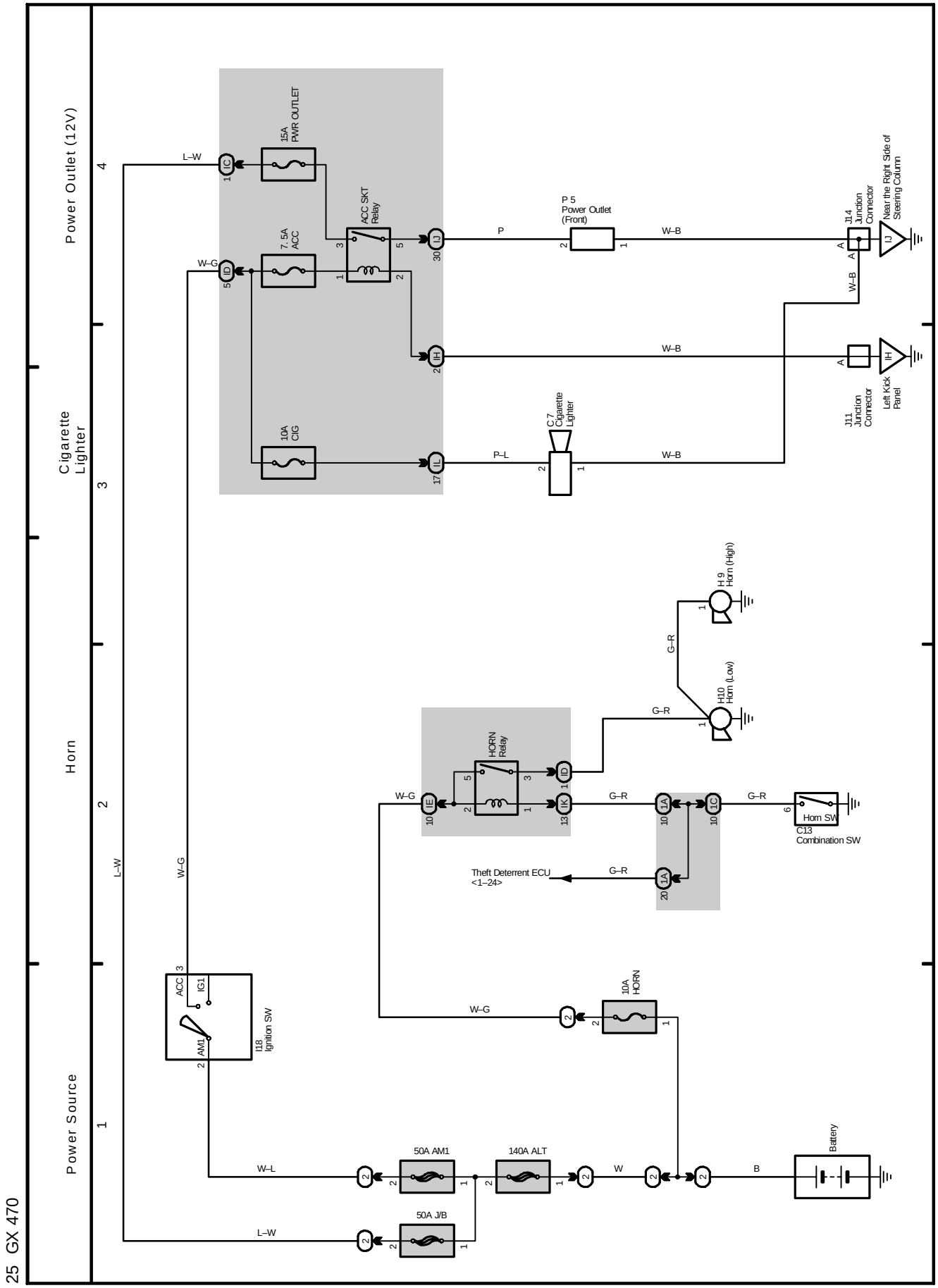
Power Outlet (12V)
Cigarette Lighter
Horn
Power Source
15A PWR OUTLET
7.5A ACC
10A CIG
ACC SKT Relay
P 5 Power Outlet (Front)
J14 Junction Connector
Near the Right Side of Steering Column
J11 Junction Connector
Left Kick Panel
C7 Cigarette Lighter
H9 Horn (High)
H10 Horn (Low)
HORN Relay
Horn SW
C13 Combination SW
Theft Deterrent ECU <1–24>
10A HORN
I18 Ignition SW
ACC
IG1
AM1
50A AM1
140A ALT
50A J/B
Battery
L–W
W–G
P
W–B
P–L
G–R
W–L
W
B

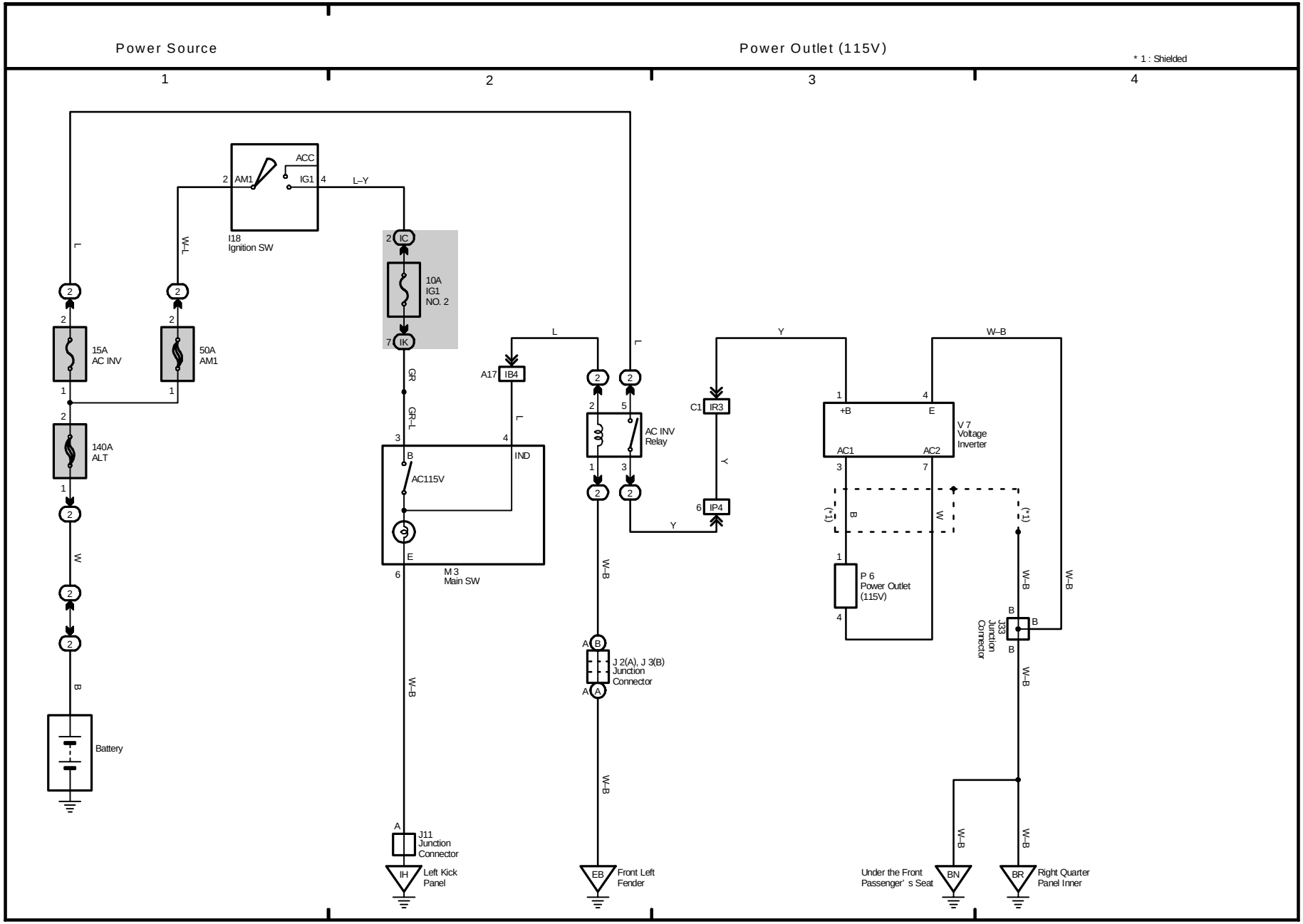
Power Source
Power Outlet (115V)
* 1 : Shielded
1
2
3
4
ACC
AM1
IG1
L–Y
I18
Ignition SW
IC
IK
10A
IG1
NO. 2
15A
AC INV
50A
AM1
140A
ALT
Battery
GR
GR–L
A17
IB4
IND
AC115V
M 3
Main SW
AC INV
Relay
C1
IR3
IP4
J 2(A), J 3(B)
Junction
Connector
J11
Junction
Connector
IH
Left Kick
Panel
EB
Front Left
Fender
+B
E
AC1
AC2
V 7
Voltage
Inverter
P 6
Power Outlet
(115V)
J33
Junction
Connector
Under the Front
Passenger' s Seat
BN
BR
Right Quarter
Panel Inner

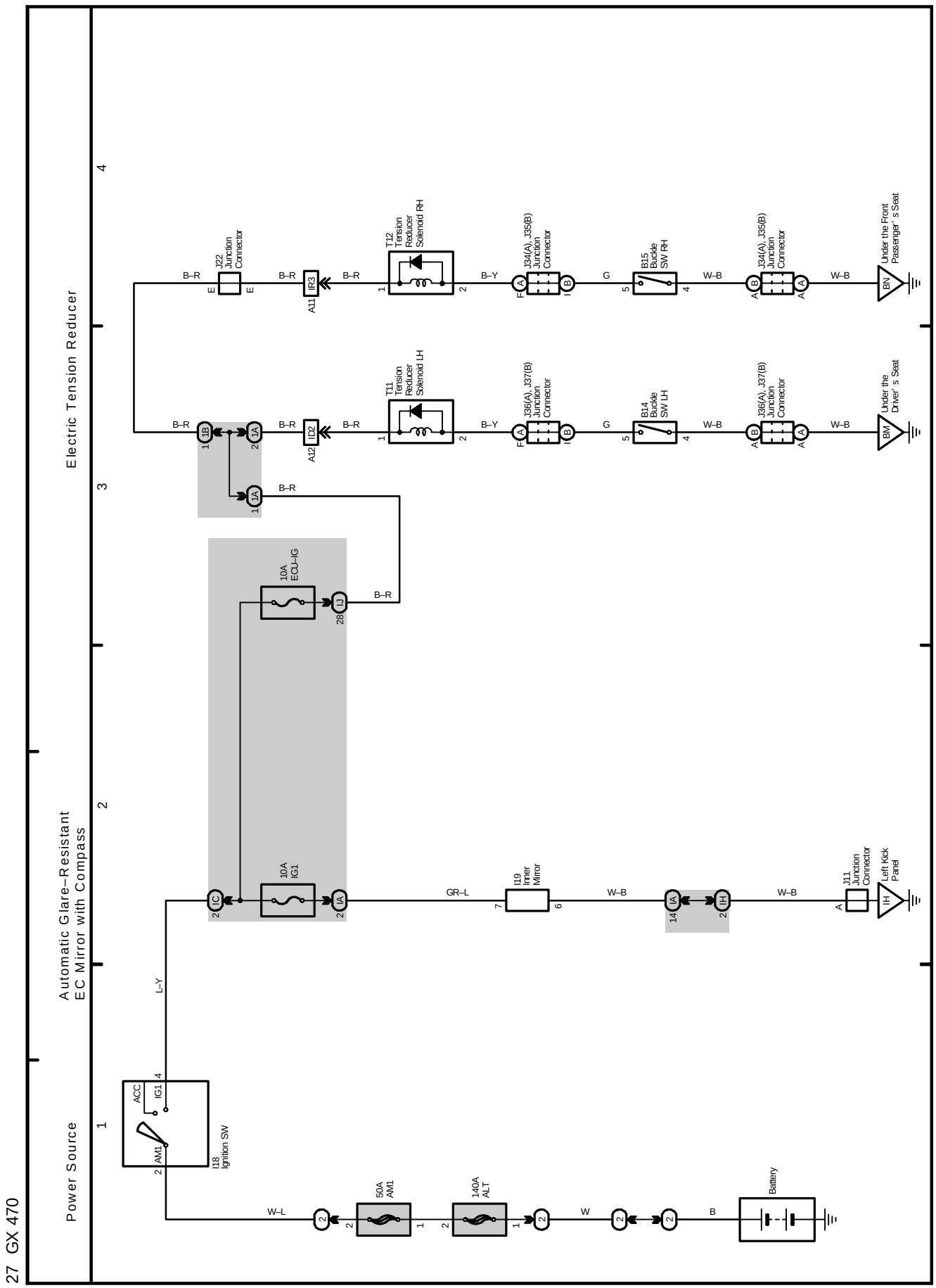
27 GX 470
Power Source
Automatic Glare–Resistant
E C Mirror with Compass
Electric Tension Reducer
1
2
3
4
I18
Ignition SW
ACC
IG1
AM1
L–Y
W–L
50A
AM1
140A
ALT
W
B
Battery
10A
IG1
10A
ECU–IG
GR–L
I19
Inner
Mirror
W–B
J11
Junction
Connector
Left Kick
Panel
B–R
J22
Junction
Connector
A11
IR3
A12
ID2
T12
Tension
Reducer
Solenoid RH
T11
Tension
Reducer
Solenoid LH
B–Y
J34(A), J35(B)
Junction
Connector
J36(A), J37(B)
Junction
Connector
G
B15
Buckle
SW RH
B14
Buckle
SW LH
Under the Front
Passenger' s Seat
Under the
Driver' s Seat

28 GX 470

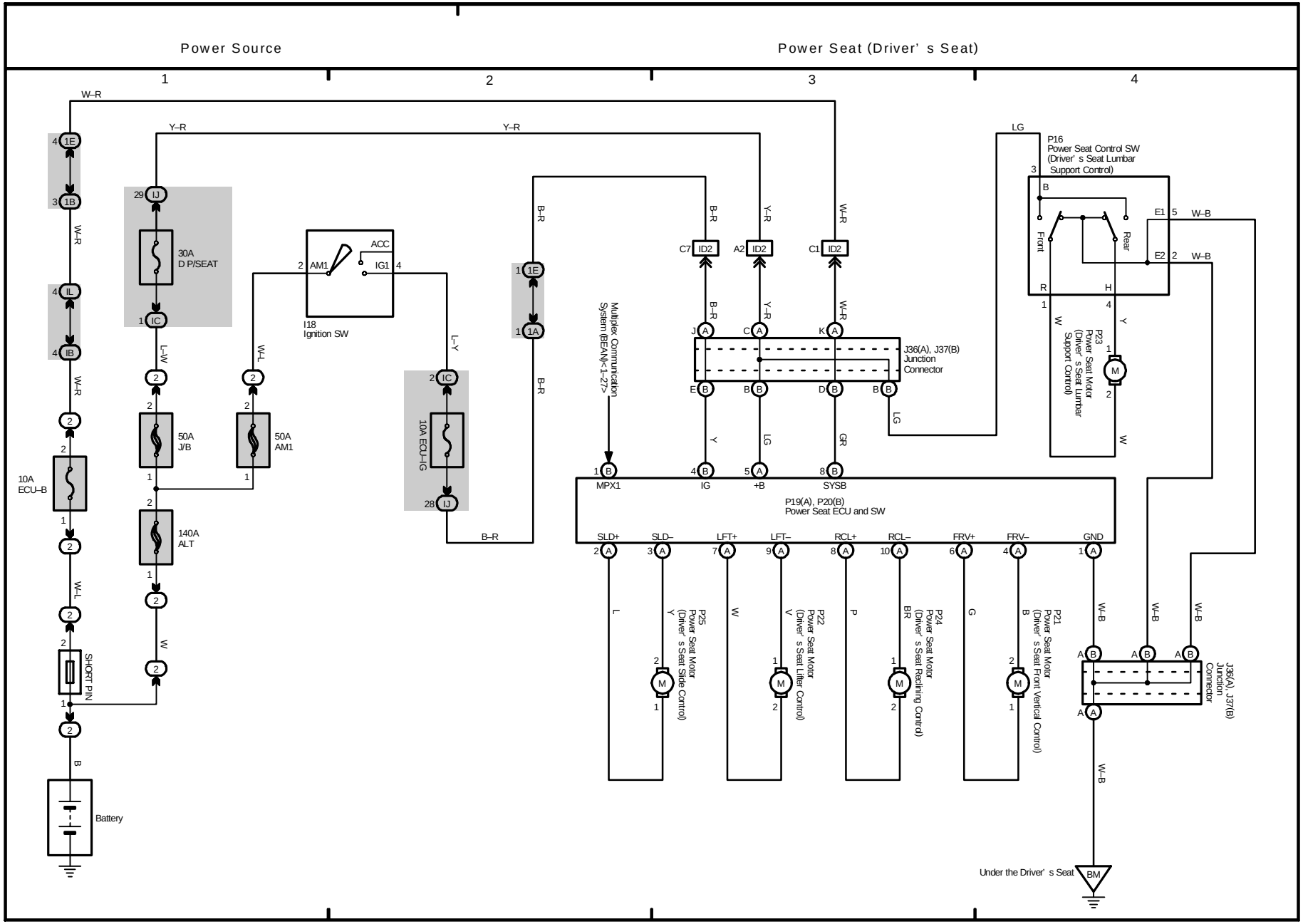
Power Source
Power Seat (Driver' s Seat)
1
2
3
4
W–R
Y–R
LG
P16
Power Seat Control SW
(Driver' s Seat Lumbar
Support Control)
Front
Rear
E1
E2
W–B
30A
D P/SEAT
I18
Ignition SW
ACC
AM1
IG1
L–W
W–L
L–Y
B–R
Y–R
C7
A2
C1
ID2
J36(A), J37(B)
Junction
Connector
P23
Power Seat Motor
(Driver' s Seat Lumbar
Support Control)
10A
ECU–B
50A
J/B
50A
AM1
10A ECU–IG
Multiplex Communication
System (BEAN)<1–27>
MPX1
IG
+B
SYSB
P19(A), P20(B)
Power Seat ECU and SW
SLD+
SLD–
LFT+
LFT–
RCL+
RCL–
FRV+
FRV–
GND
140A
ALT
SHORT PIN
P25
Power Seat Motor
(Driver' s Seat Slide Control)
P22
Power Seat Motor
(Driver' s Seat Lifter Control)
P24
Power Seat Motor
(Driver' s Seat Reclining Control)
P21
Power Seat Motor
(Driver' s Seat Front Vertical Control)
J36(A), J37(B)
Junction
Connector
Battery
Under the Driver' s Seat
BM

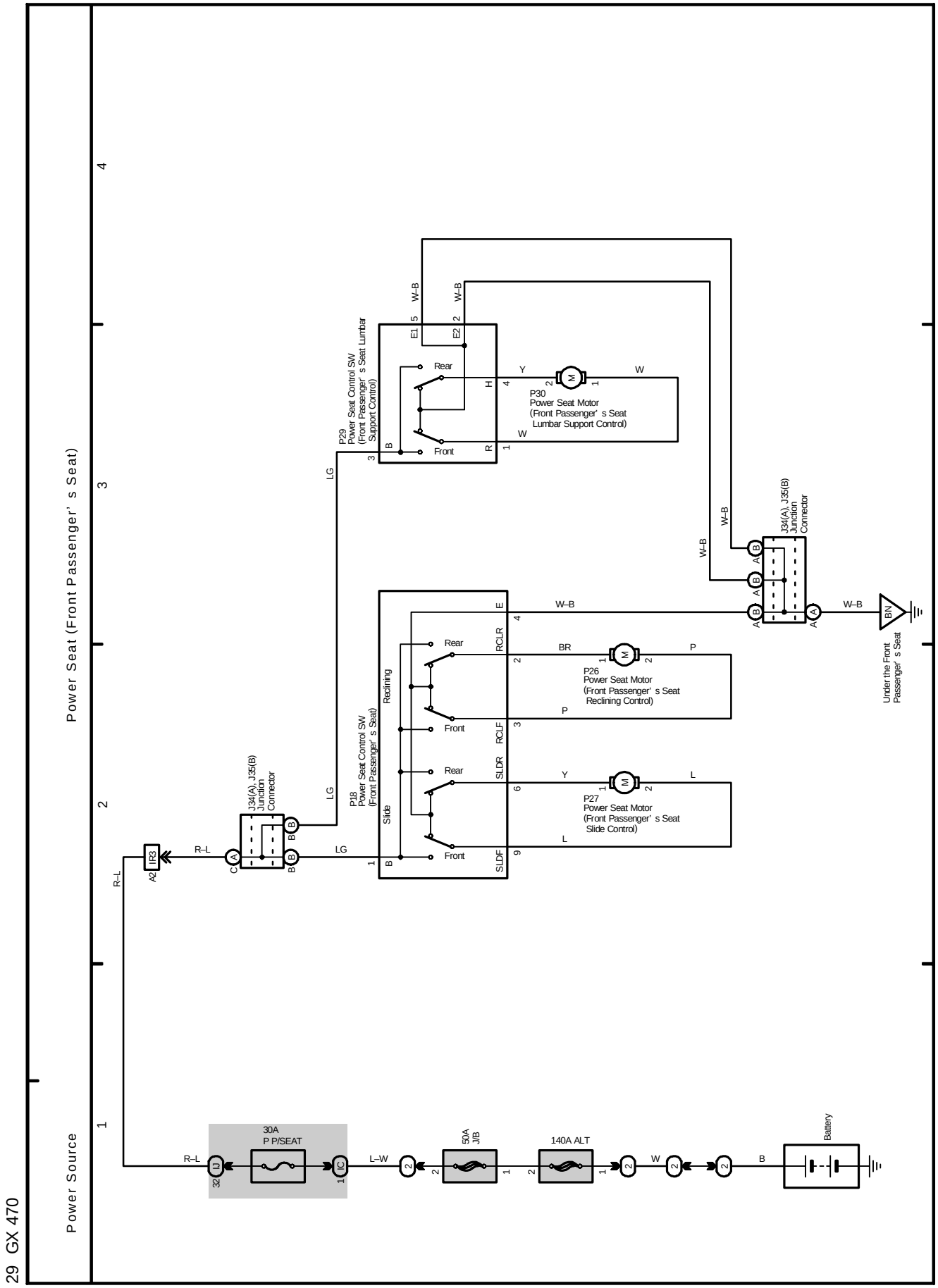
Power Source
Power Seat (Front Passenger' s Seat)
1
2
3
4
30A
P P/SEAT
50A
J/B
140A ALT
Battery
R–L
L–W
W
B
IR3
A2
J34(A), J35(B)
Junction
Connector
LG
P18
Power Seat Control SW
(Front Passenger' s Seat)
Slide
Reclining
Rear
Front
RCLR
RCLF
SLDR
SLDF
P26
Power Seat Motor
(Front Passenger' s Seat
Reclining Control)
P27
Power Seat Motor
(Front Passenger' s Seat
Slide Control)
P29
Power Seat Control SW
(Front Passenger' s Seat Lumbar
Support Control)
P30
Power Seat Motor
(Front Passenger' s Seat
Lumbar Support Control)
W–B
E1
E2
Y
BR
P
L
Under the Front
Passenger' s Seat
BN

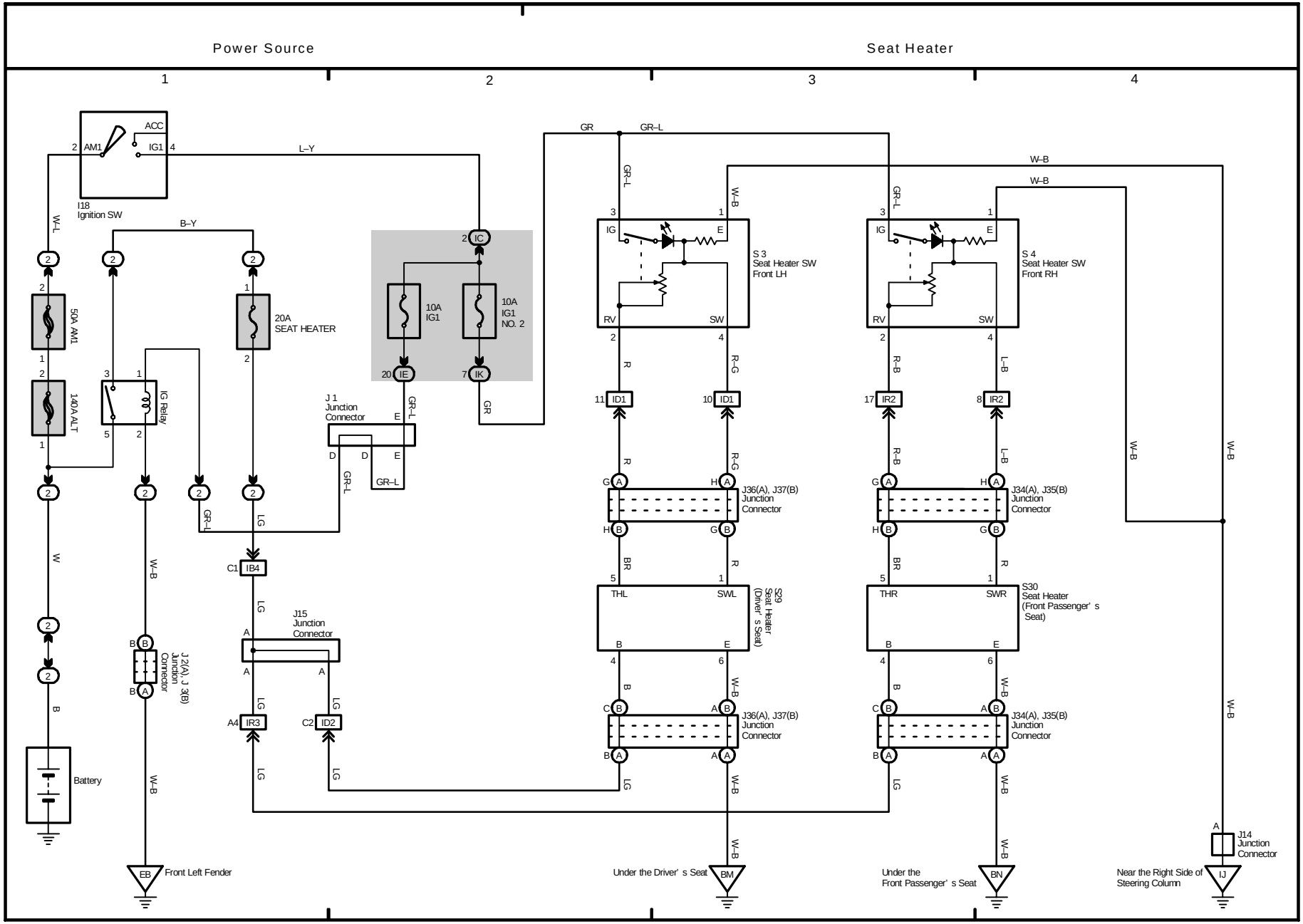
Power Source
Seat Heater
1
2
3
4
I18
Ignition SW
ACC
AM1
IG1
L–Y
B–Y
W–L
50A AM1
140A ALT
IG Relay
20A
SEAT HEATER
10A
IG1
10A
IG1
NO. 2
IC
IE
IK
J 1
Junction
Connector
GR–L
GR
LG
C1
IB4
J15
Junction
Connector
A4
IR3
C2
ID2
J 2(A), J 3(B)
Junction
Connector
W
B
Battery
EB
Front Left Fender
S 3
Seat Heater SW
Front LH
S 4
Seat Heater SW
Front RH
IG
E
RV
SW
ID1
IR2
R
R–G
R–B
L–B
J36(A), J37(B)
Junction
Connector
J34(A), J35(B)
Junction
Connector
BR
THL
SWL
S29
Seat Heater
(Driver' s Seat)
THR
SWR
S30
Seat Heater
(Front Passenger' s
Seat)
W–B
Under the Driver' s Seat
BM
Under the
Front Passenger' s Seat
BN
J14
Junction
Connector
Near the Right Side of
Steering Column
IJ

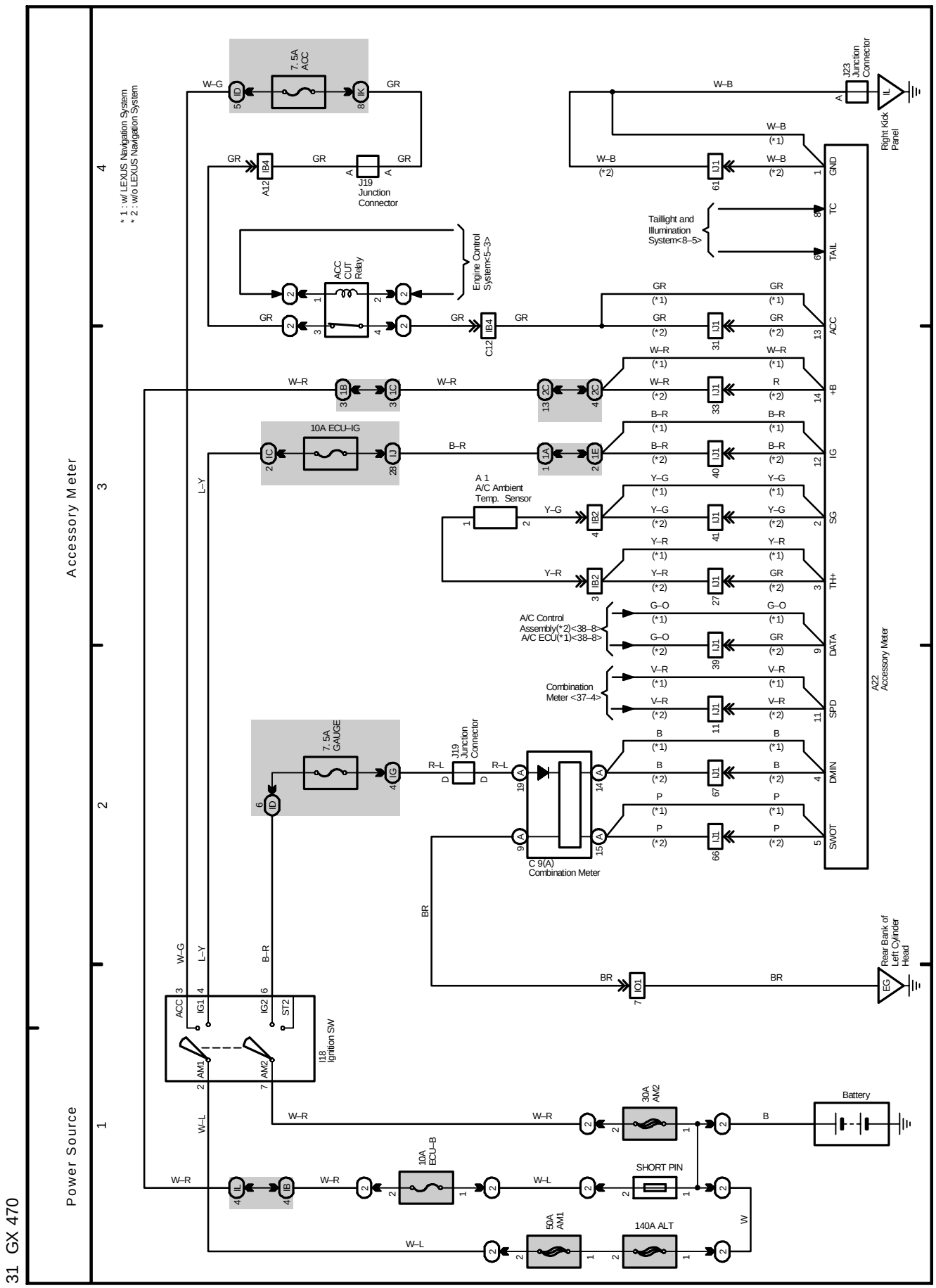
Accessory Meter
Power Source
* 1 : w/ LEXUS Navigation System
* 2 : w/o LEXUS Navigation System
7.5A ACC
J19 Junction Connector
ACC CUT Relay
Engine Control System<5–3>
J23 Junction Connector
Right Kick Panel
Taillight and Illumination System<8–5>
10A ECU–IG
A 1 A/C Ambient Temp. Sensor
A/C Control Assembly(*2)<38–8> A/C ECU(*1)<38–8>
Combination Meter <37–4>
7.5A GAUGE
J19 Junction Connector
C 9(A) Combination Meter
A22 Accessory Meter
Rear Bank of Left Cylinder Head
I18 Ignition SW
30A AM2
Battery
10A ECU–B
SHORT PIN
50A AM1
140A ALT

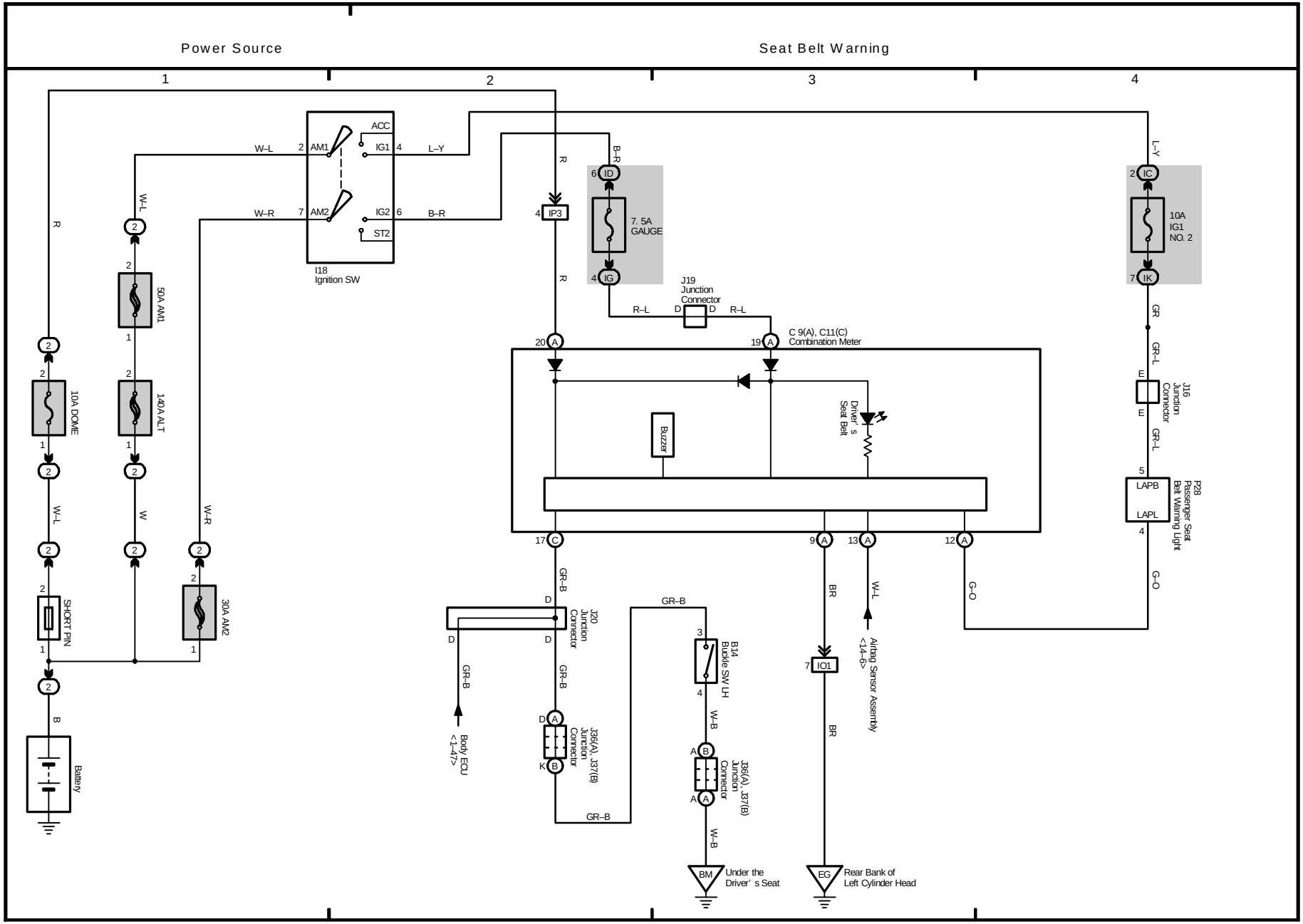
Power Source
Seat Belt Warning
1
2
3
4
I18
Ignition SW
ACC
IG1
IG2
ST2
AM1
AM2
W–L
W–R
L–Y
B–R
R
50A AM1
140A ALT
30A AM2
10A DOME
SHORT PIN
Battery
B
W
7. 5A
GAUGE
IP3
ID
IG
J19
Junction
Connector
R–L
C 9(A), C11(C)
Combination Meter
Buzzer
Driver's
Seat Belt
10A
IG1
NO. 2
IC
IK
GR
GR–L
J16
Junction
Connector
P28
Passenger Seat
Belt Warning Light
LAPB
LAPL
G–O
J20
Junction
Connector
GR–B
J36(A), J37(B)
Junction
Connector
Body ECU
<1–47>
B14
Buckle SW LH
W–B
BR
IO1
Airbag Sensor Assembly
<14–6>
Under the
Driver's Seat
Rear Bank of
Left Cylinder Head
BM
EG

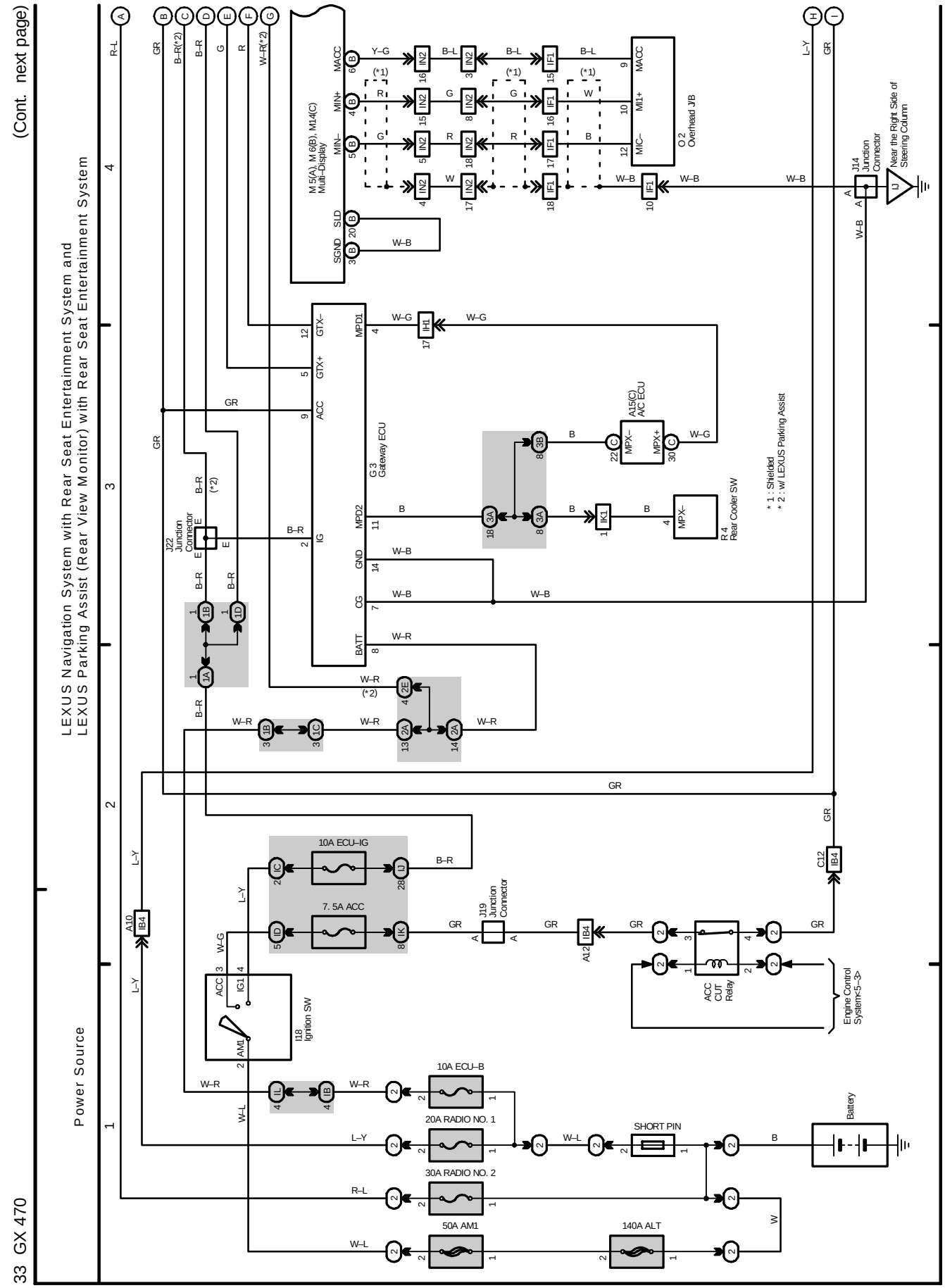
(Cont. next page)
LEXUS Navigation System with Rear Seat Entertainment System and
LEXUS Parking Assist (Rear View Monitor) with Rear Seat Entertainment System
Power Source
M 5(A), M 6(B), M14(C)
Multi-Display
MACC
MIN+
MIN–
SLD
SGND
O 2
Overhead JB
MI1+
MIC–
J14
Junction
Connector
Near the Right Side of
Steering Column
G 3
Gateway ECU
GTX–
GTX+
ACC
IG
MPD1
MPD2
GND
CG
BATT
A15(C)
A/C ECU
MPX–
MPX+
R 4
Rear Cooler SW
* 1 : Shielded
* 2 : w/ LEXUS Parking Assist
J22
Junction
Connector
10A ECU–IG
7. 5A ACC
J19
Junction
Connector
ACC
CUT
Relay
Engine Control
System<5–3>
I18
Ignition SW
10A ECU–B
20A RADIO NO. 1
30A RADIO NO. 2
50A AM1
140A ALT
SHORT PIN
Battery

(Cont. next page)

LEXUS Navigation System with Rear Seat Entertainment System and
LEXUS Parking Assist (Rear View Monitor) with Rear Seat Entertainment System

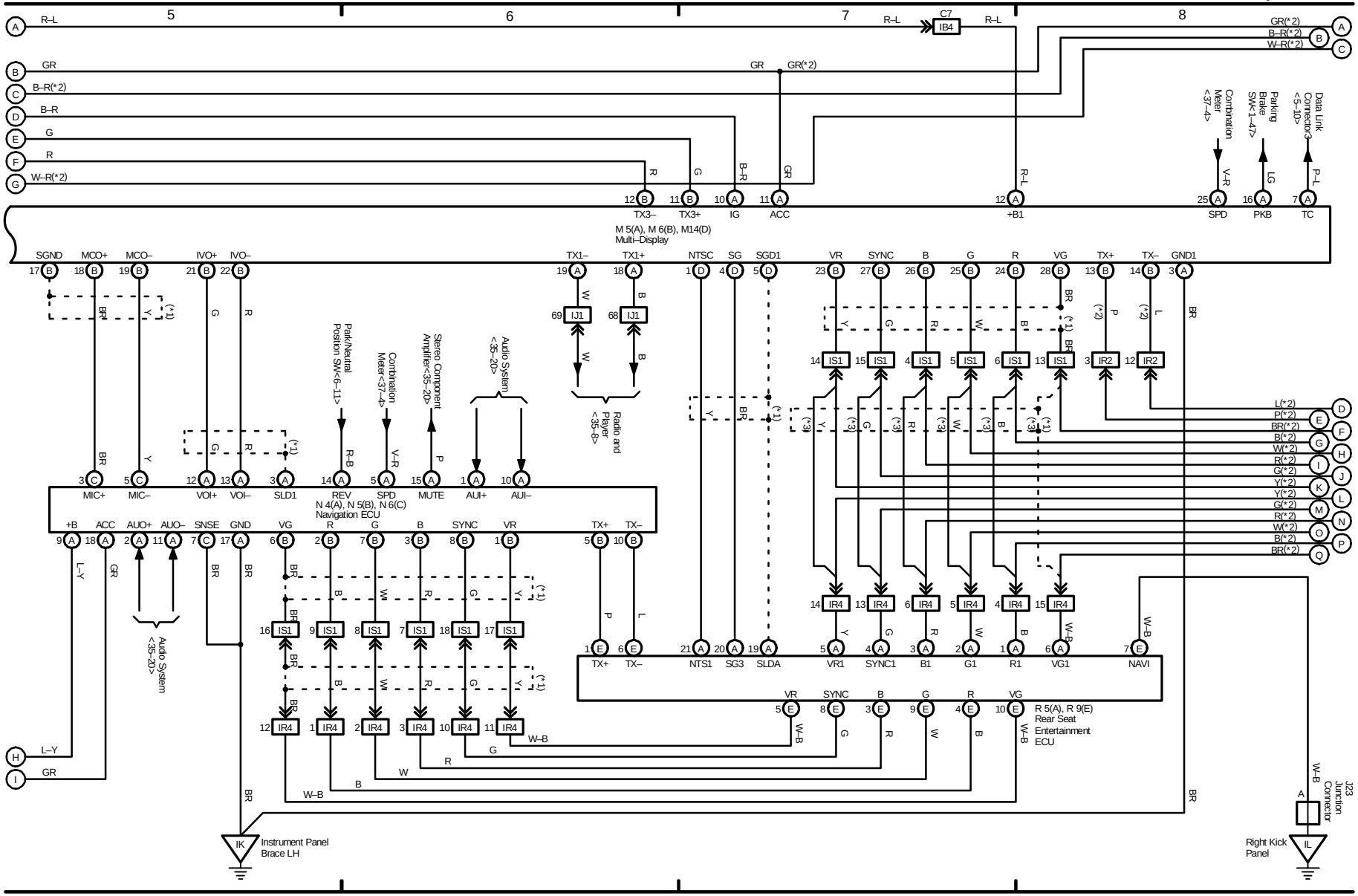

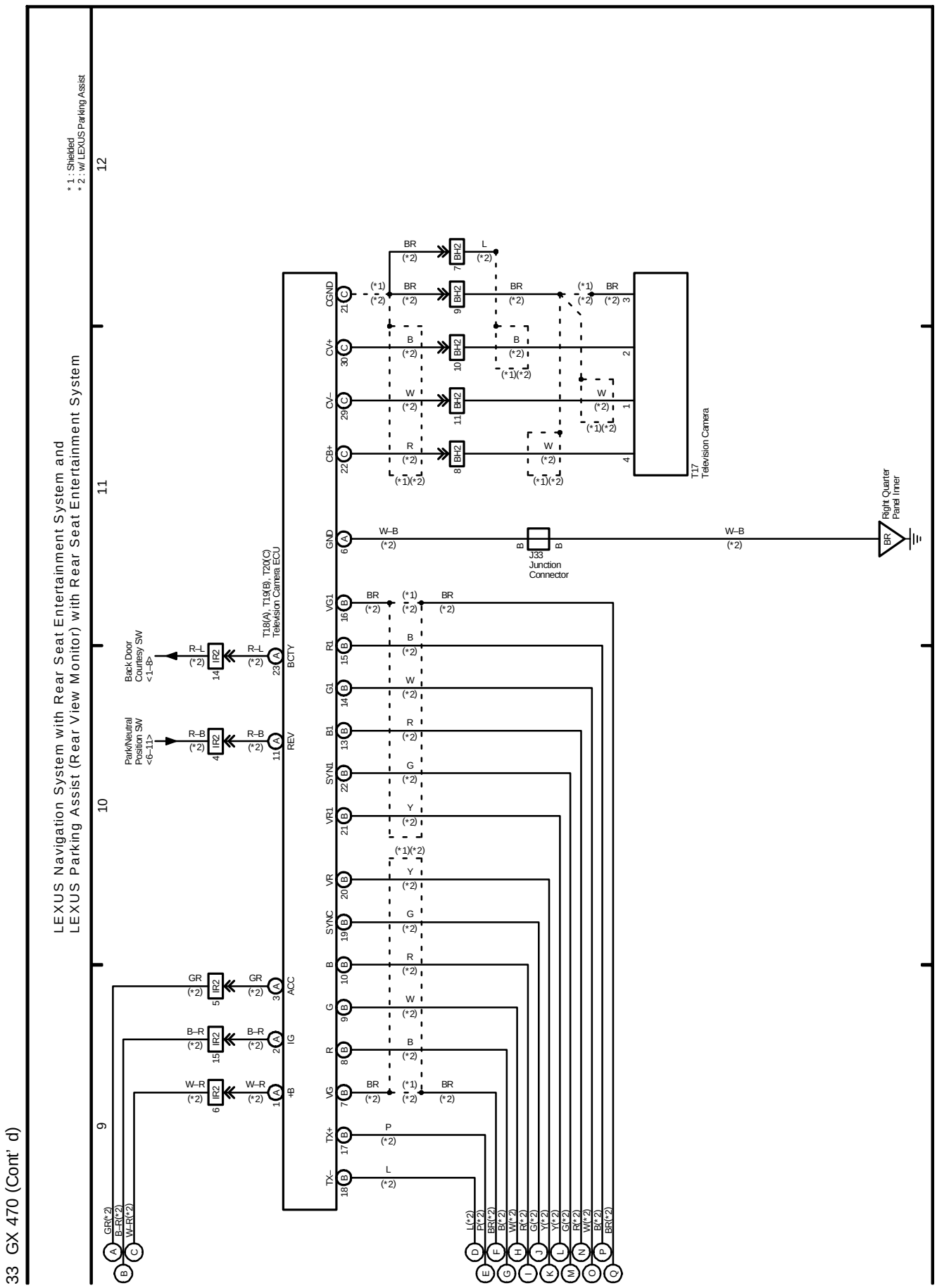
33 GX 470 (Cont' d)
LEXUS Navigation System with Rear Seat Entertainment System and
LEXUS Parking Assist (Rear View Monitor) with Rear Seat Entertainment System
* 1 : Shielded
* 2 : w/ LEXUS Parking Assist
9
10
11
12
T18(A), T19(B), T20(C)
Television Camera ECU
Back Door
Courtesy SW
<1-8>
Park/Neutral
Position SW
<6-11>
IR2
BH2
J33
Junction
Connector
T17
Television Camera
Right Quarter
Panel Inner
CGND
CV+
CV-
CB+
GND
VG1
R1
G1
B1
SYN1
VR1
VR
SYNC
B
G
R
VG
TX+
TX-
BCTY
REV
ACC
IG
+B

(Cont. next page)

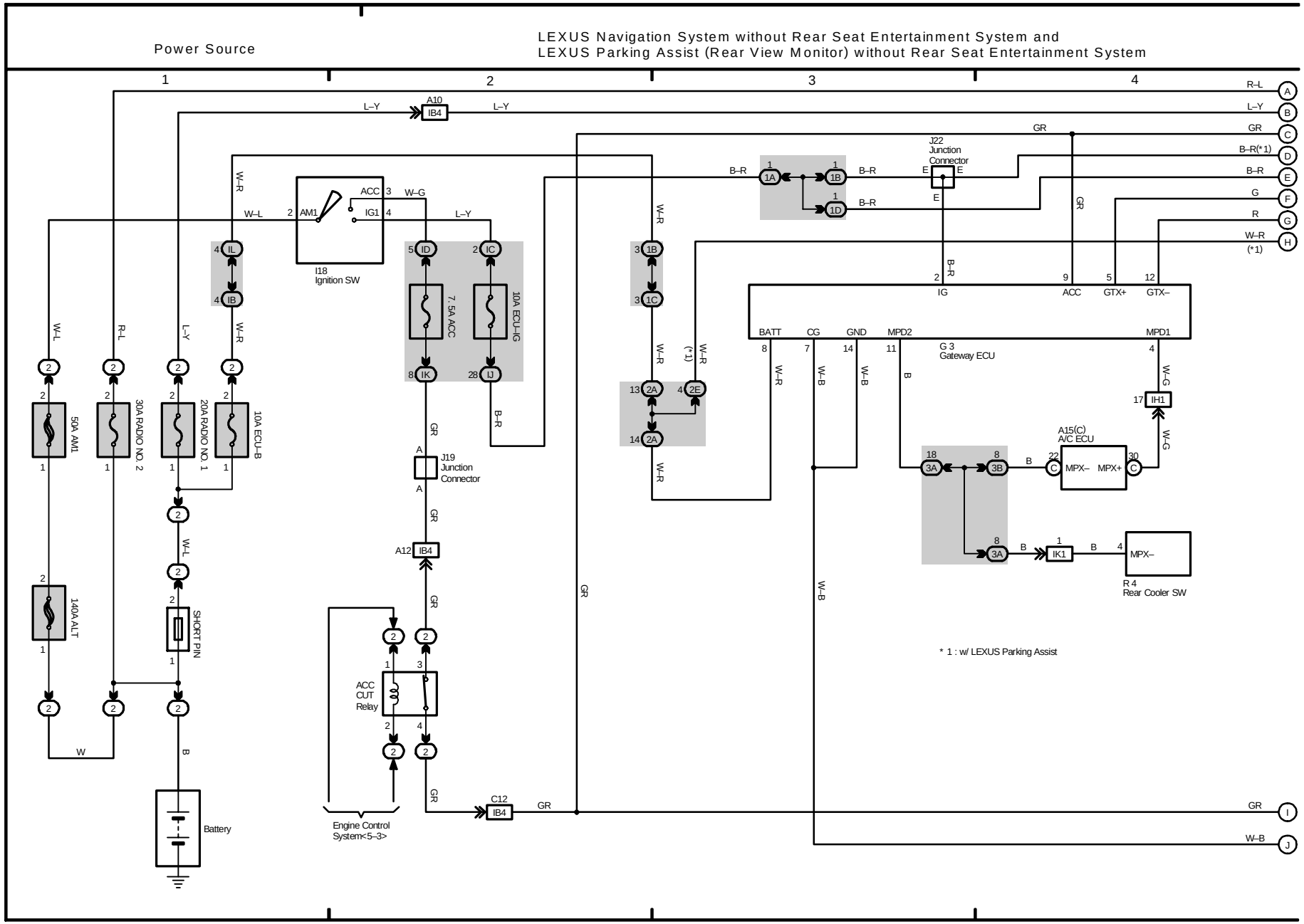

(Cont. next page)

LEXUS Navigation System without Rear Seat Entertainment System and
LEXUS Parking Assist (Rear View Monitor) without Rear Seat Entertainment System

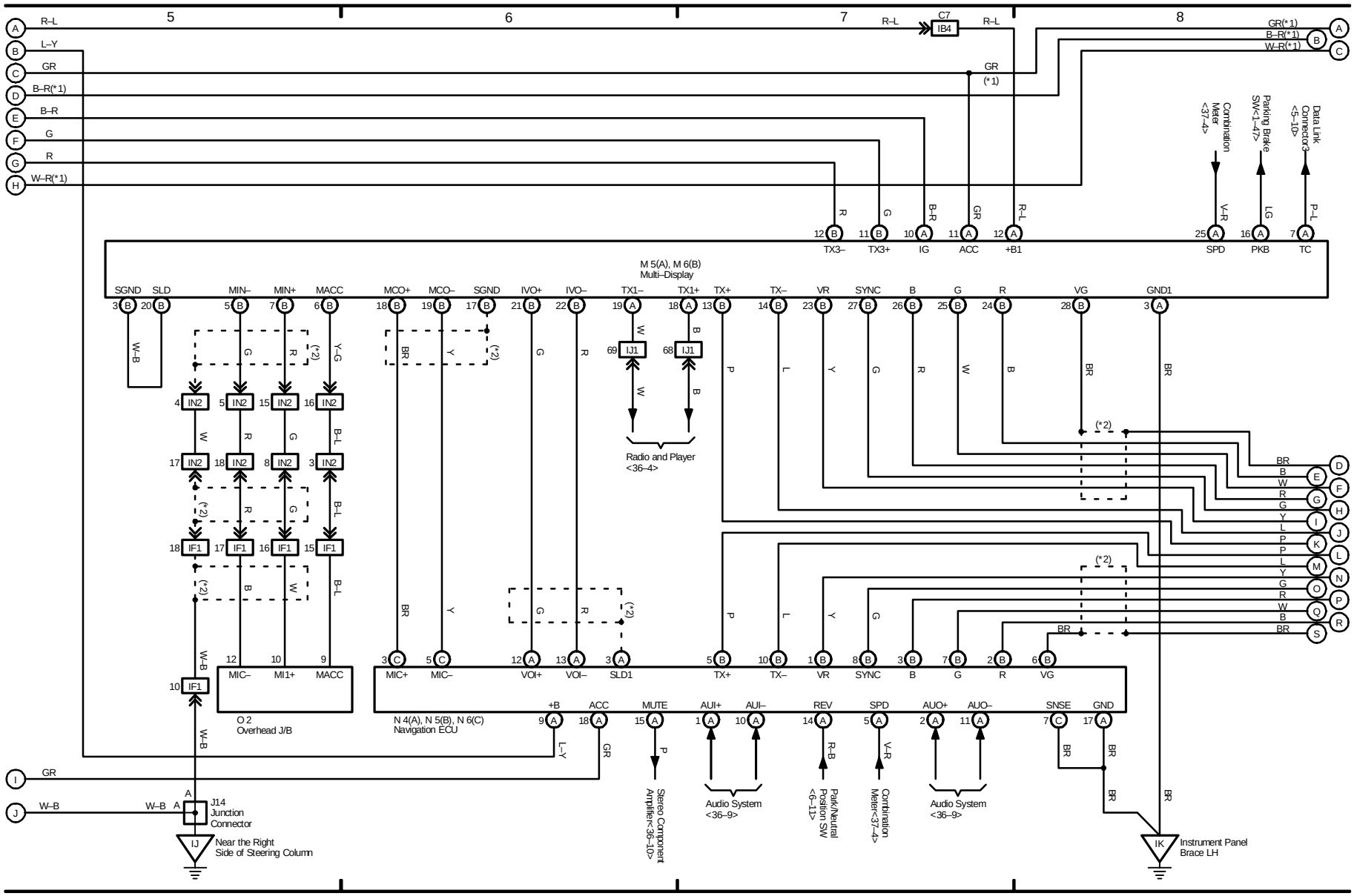

LEXUS Navigation System without Rear Seat Entertainment System and
LEXUS Parking Assist (Rear View Monitor) without Rear Seat Entertainment System

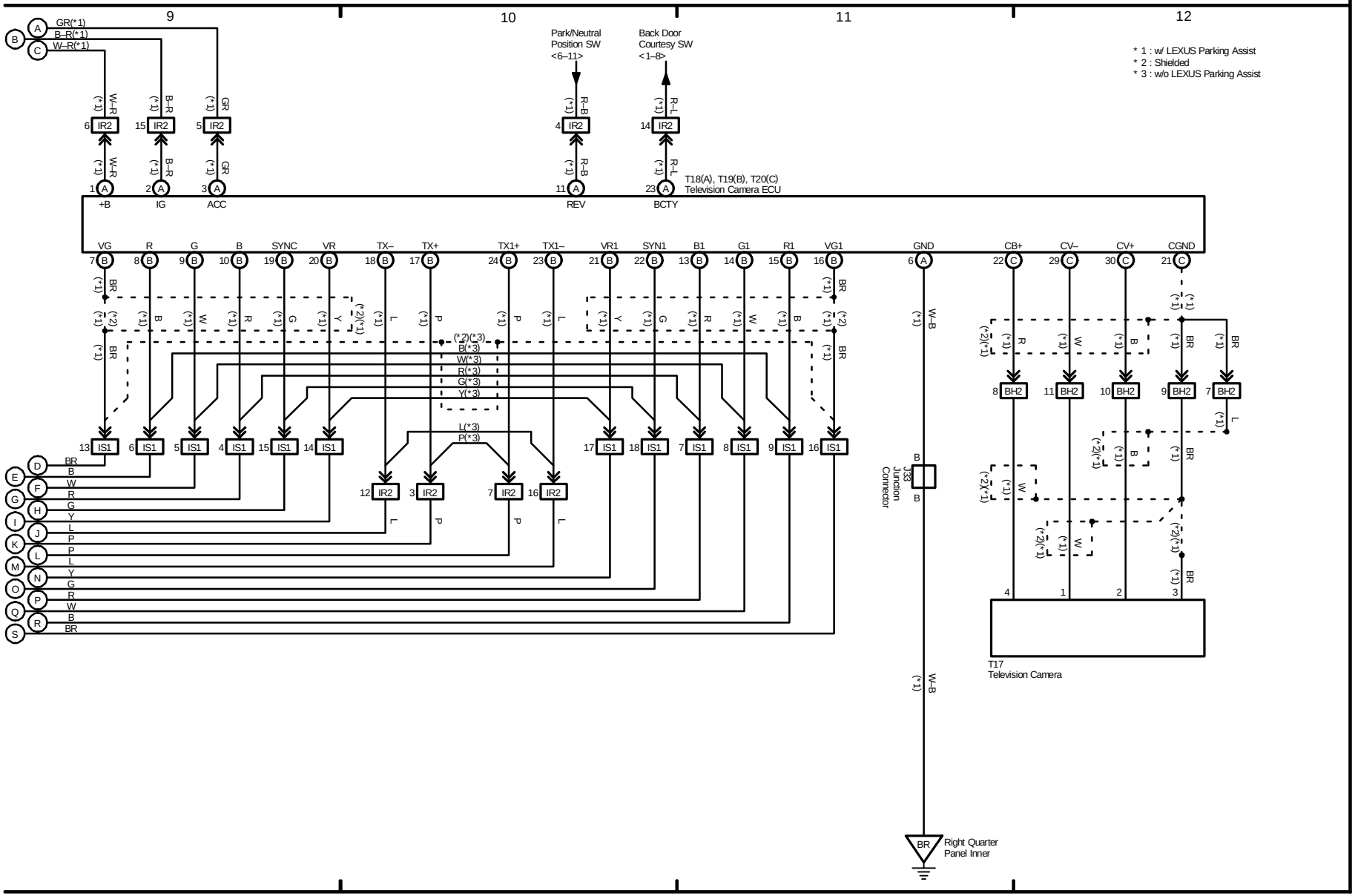

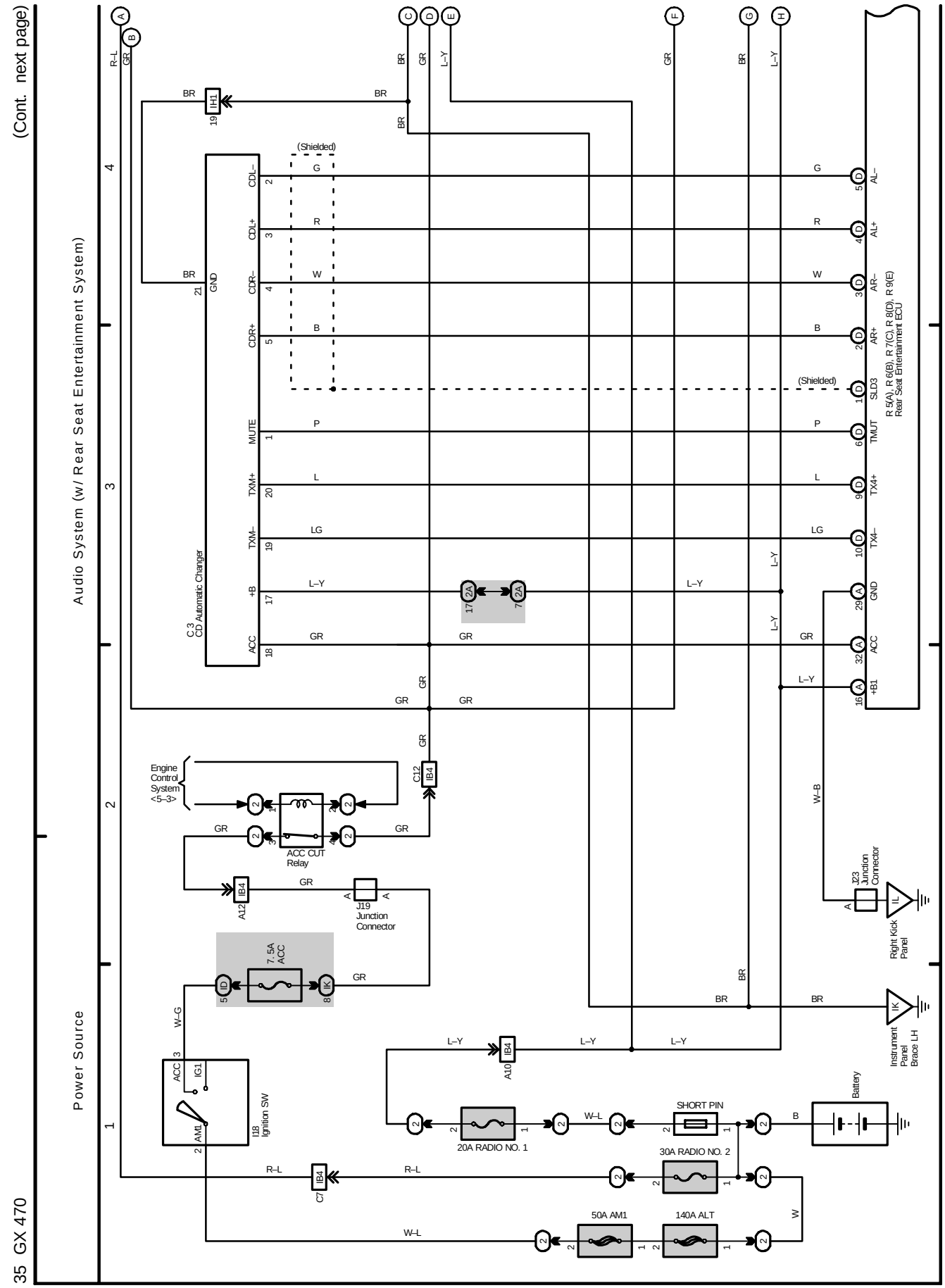
(Cont. next page)
Audio System (w/ Rear Seat Entertainment System)
Power Source
C.3
CD Automatic Changer
GND
CDL–
CDL+
CDR–
CDR+
MUTE
TXM+
TXM–
+B
ACC
(Shielded)
R 5(A), R 6(B), R 7(C), R 8(D), R 9(E)
Rear Seat Entertainment ECU
AL–
AL+
AR–
AR+
SLD3
TMUT
TX4+
TX4–
GND
ACC
+B1
IH1
C12
IB4
Engine Control System <5–3>
ACC CUT Relay
A12
J19 Junction Connector
7.5A ACC
IG1
ACC
AM1
I18 Ignition SW
C7
A10
20A RADIO NO. 1
SHORT PIN
30A RADIO NO. 2
50A AM1
140A ALT
Battery
J23 Junction Connector
Right Kick Panel
Instrument Panel Brace LH

(Cont. next page)

Audio System (w/ Rear Seat Entertainment System)

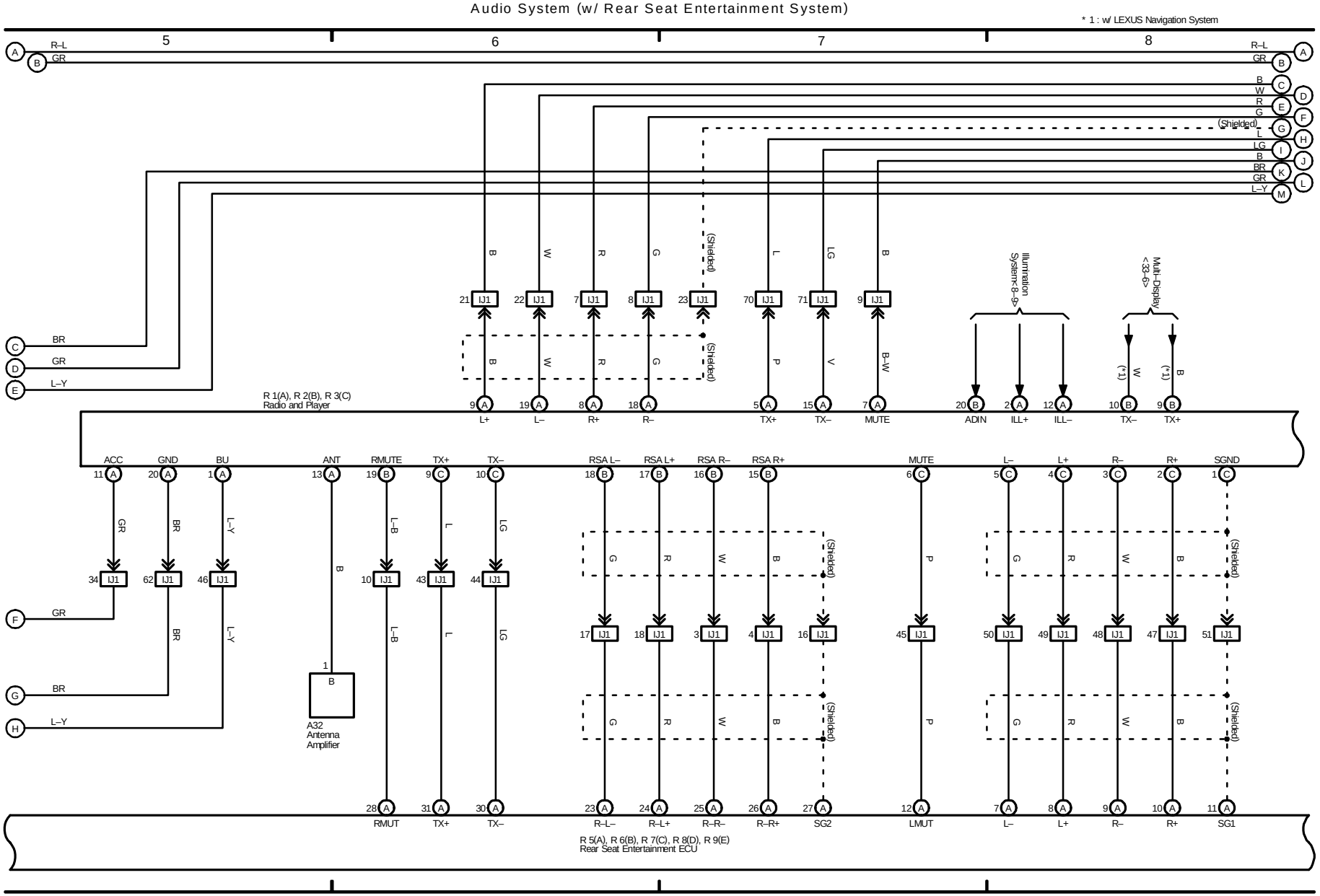

(Cont. next page)

Audio System (w/ Rear Seat Entertainment System)

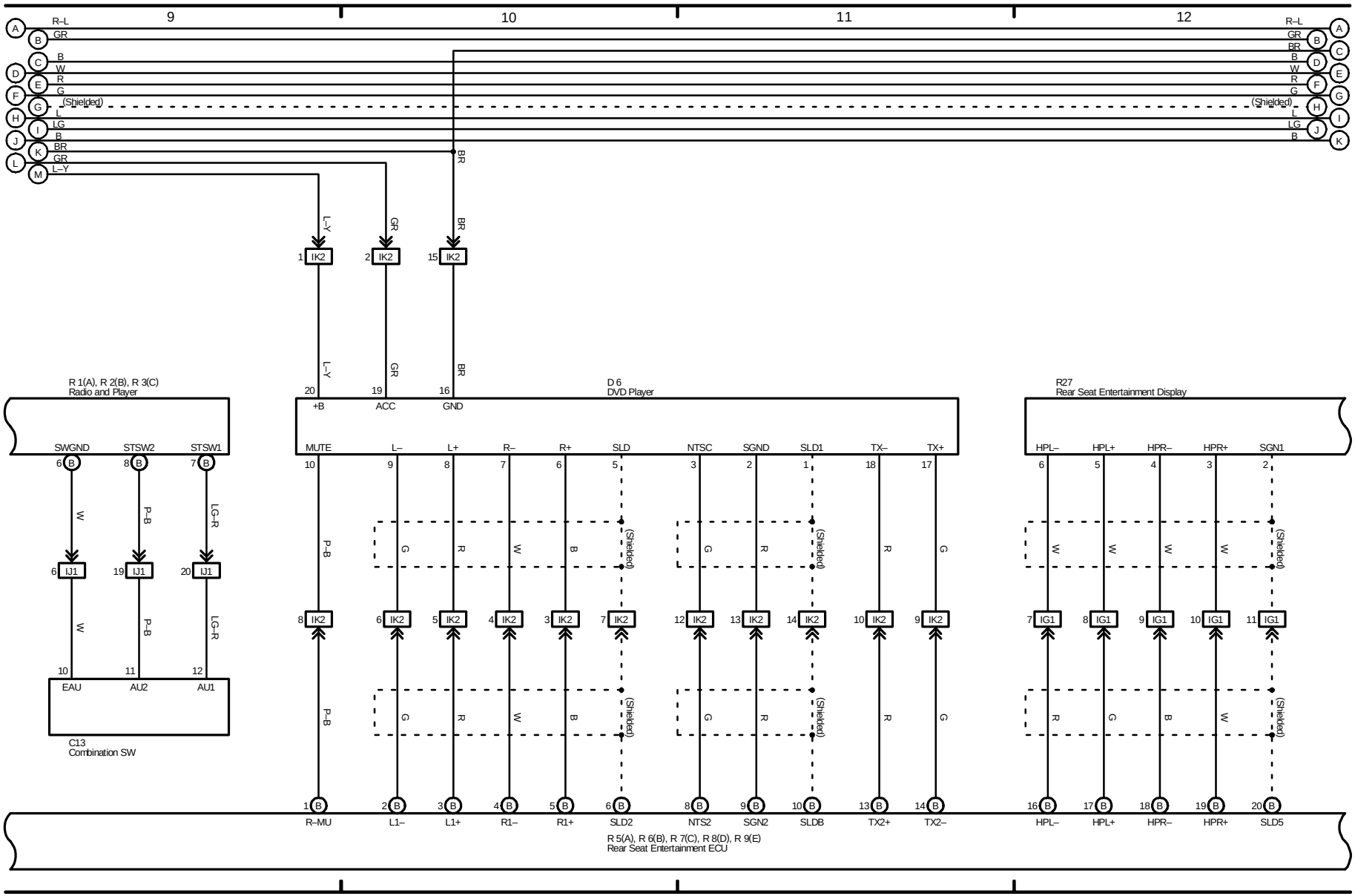

(Cont. next page)

Audio System (w/ Rear Seat Entertainment System)

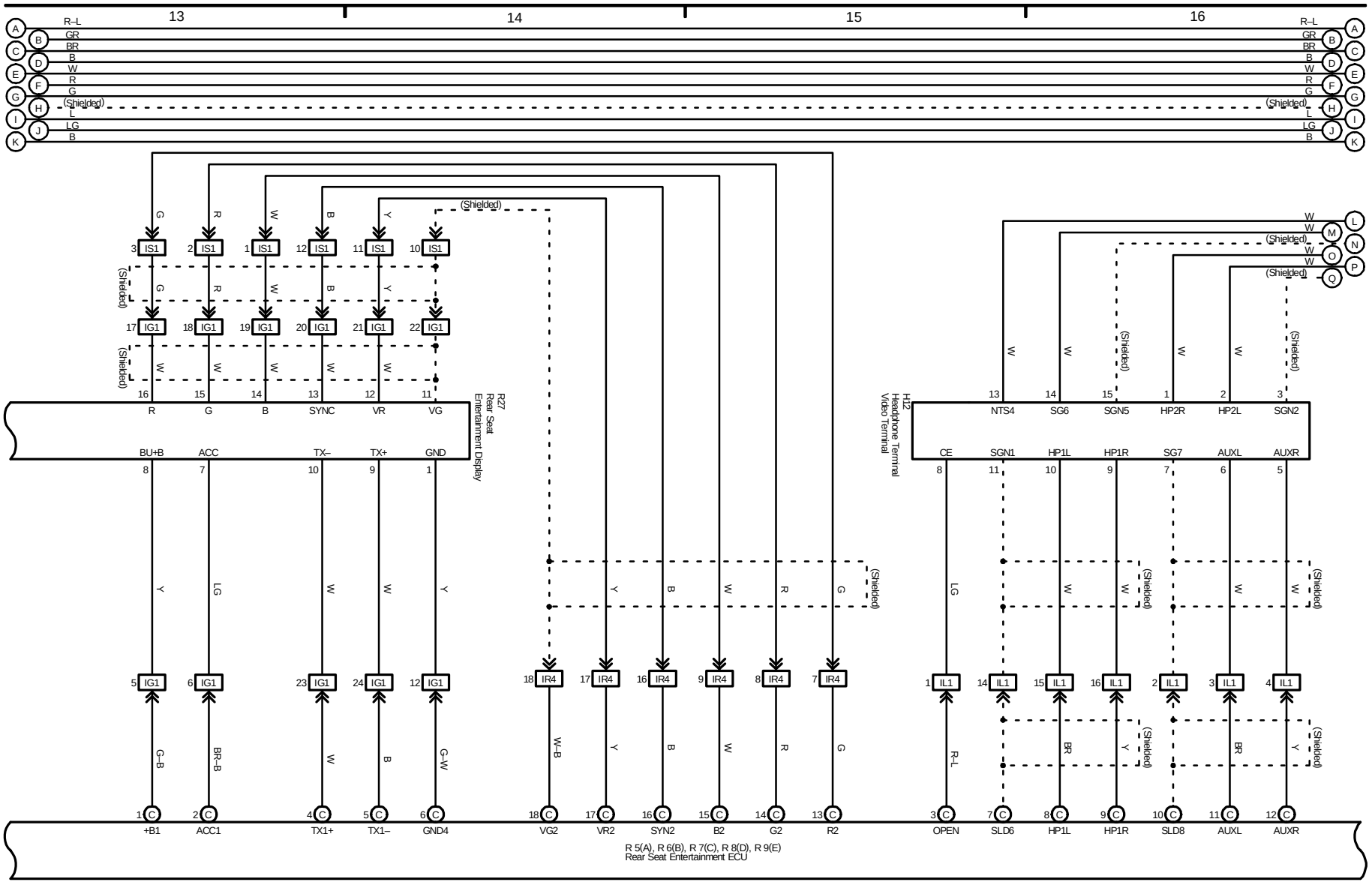

35 GX 470 (Cont' d)

(Cont. next page)

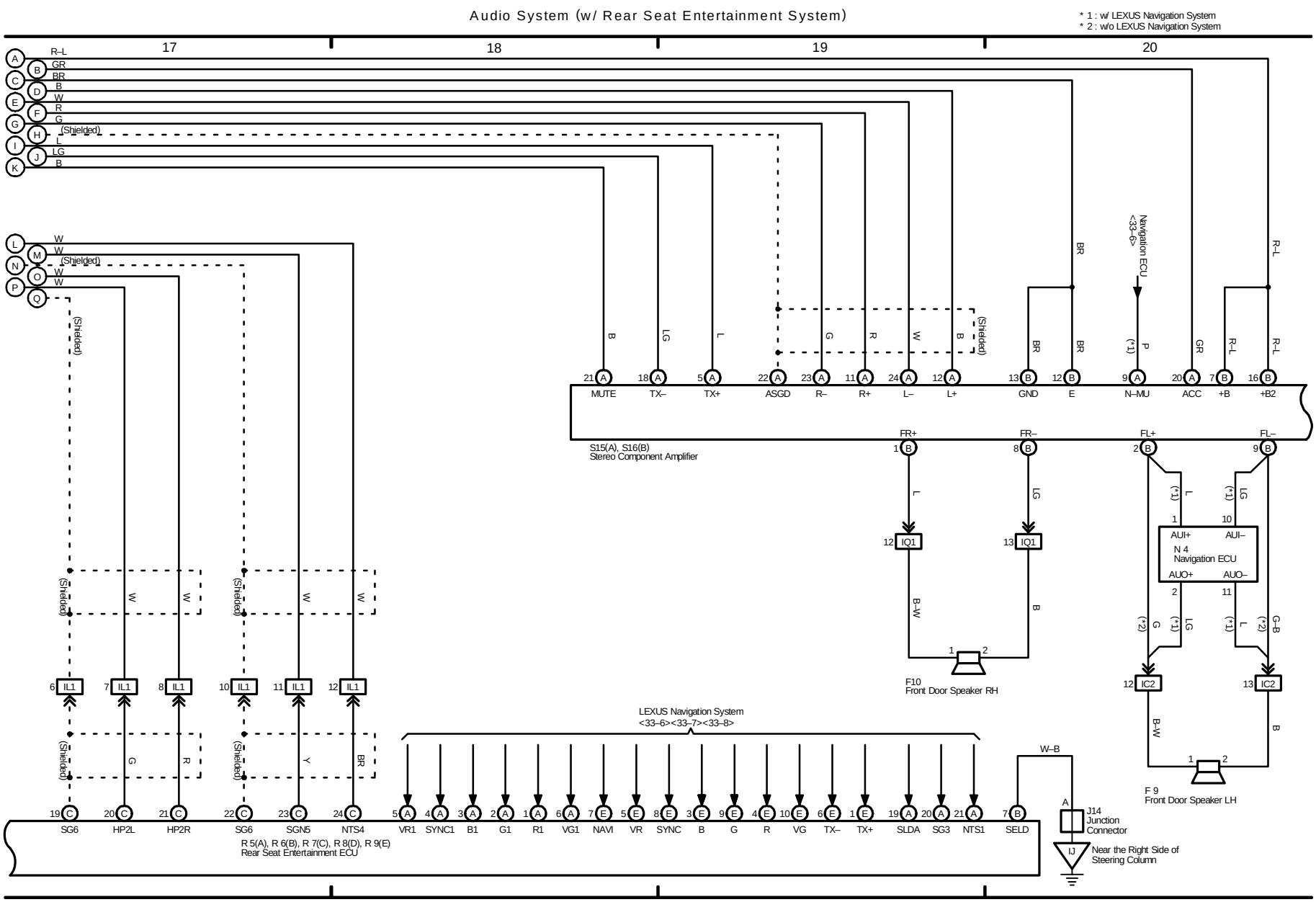

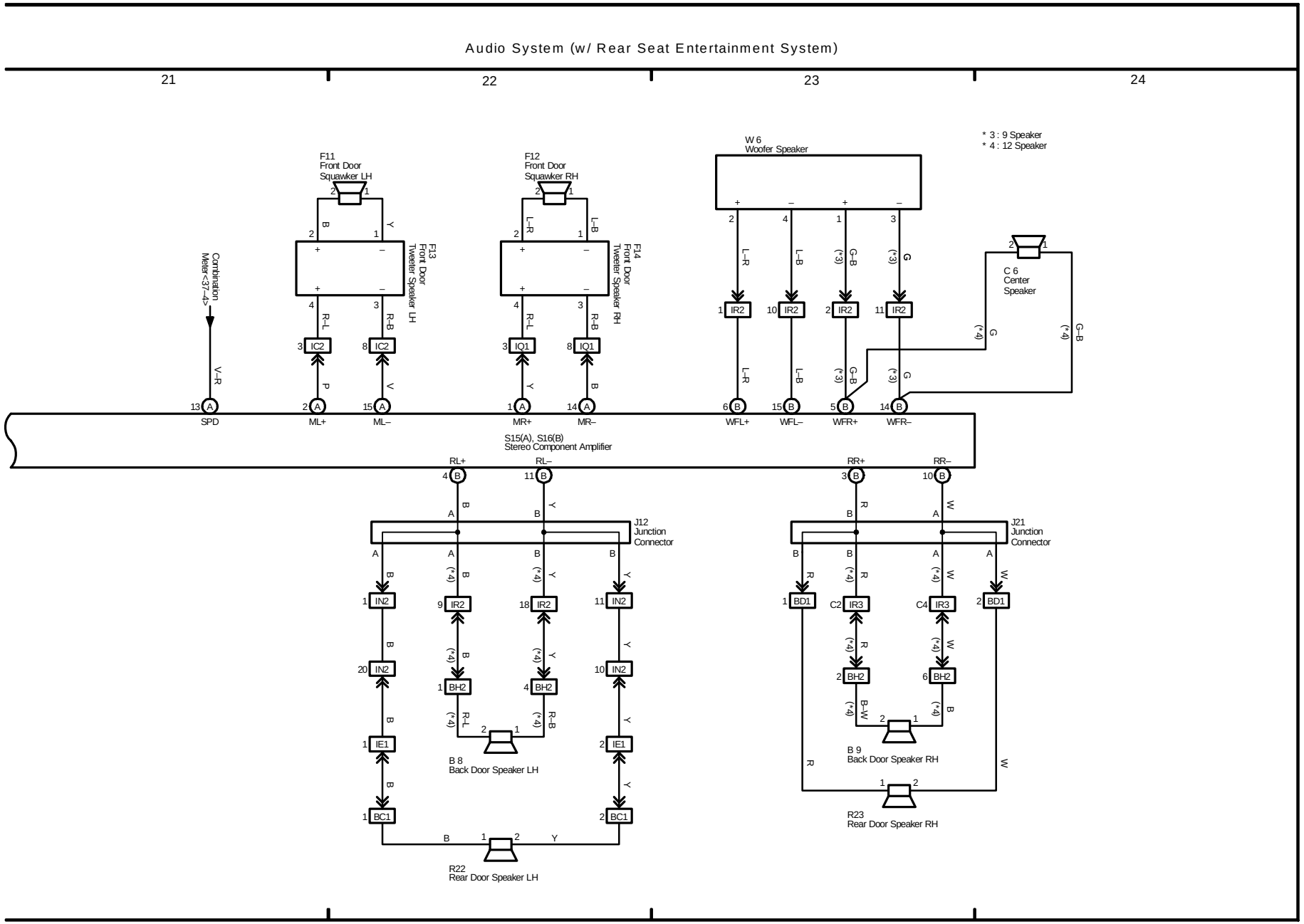
Audio System (w/ Rear Seat Entertainment System)
21
22
23
24
* 3 : 9 Speaker
* 4 : 12 Speaker
F11
Front Door
Squawker LH
F12
Front Door
Squawker RH
W 6
Woofer Speaker
F13
Front Door
Tweeter Speaker LH
F14
Front Door
Tweeter Speaker RH
C 6
Center
Speaker
Combination
Meter<37–4>
SPD
ML+
ML–
MR+
MR–
WFL+
WFL–
WFR+
WFR–
S15(A), S16(B)
Stereo Component Amplifier
RL+
RL–
RR+
RR–
J12
Junction
Connector
J21
Junction
Connector
B 8
Back Door Speaker LH
B 9
Back Door Speaker RH
R22
Rear Door Speaker LH
R23
Rear Door Speaker RH

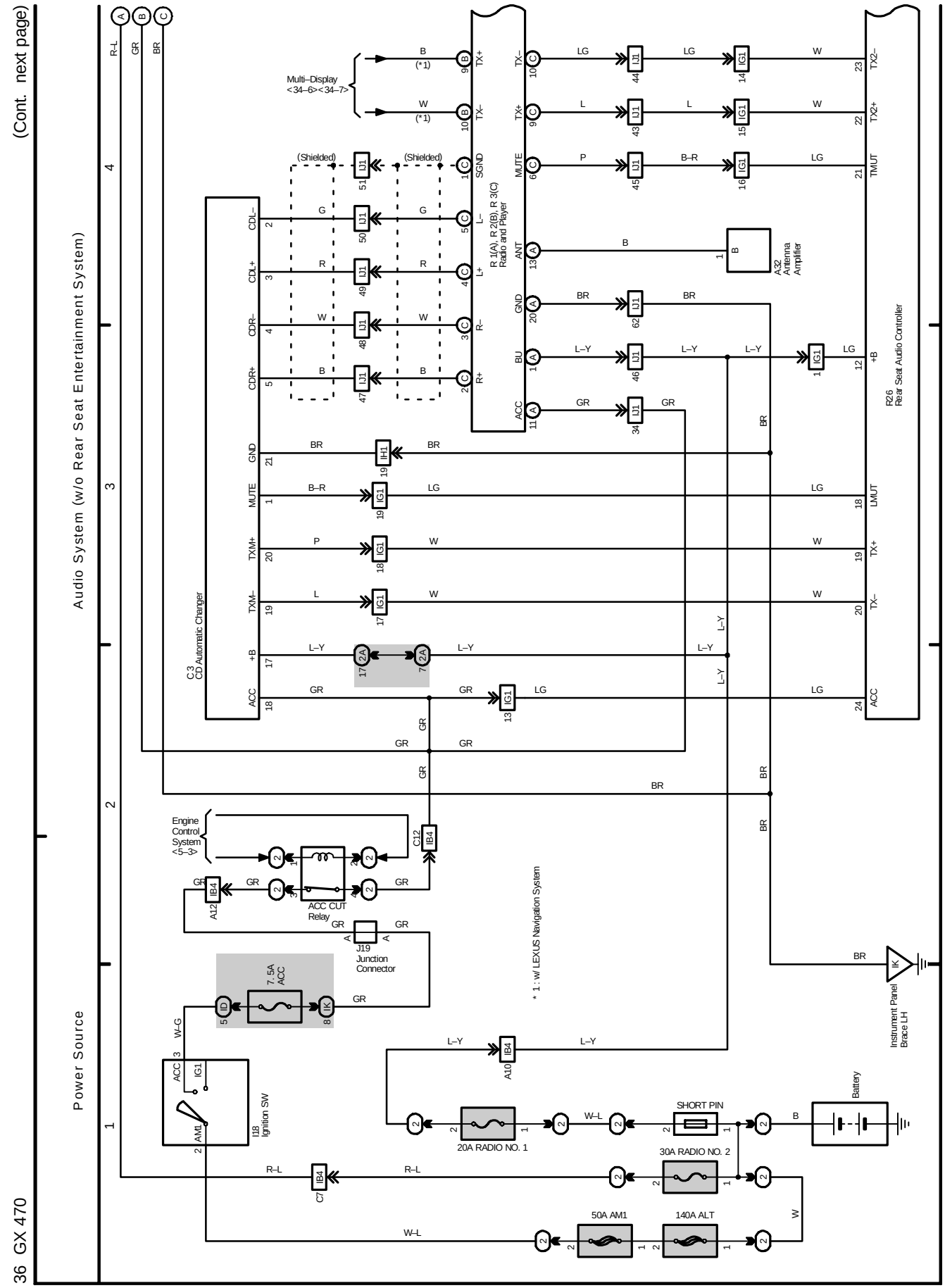
(Cont. next page)
Audio System (w/o Rear Seat Entertainment System)
Power Source
Multi–Display
<34–6><34–7>
(*1)
(Shielded)
R 1(A), R 2(B), R 3(C)
Radio and Player
A32
Antenna
Amplifier
R26
Rear Seat Audio Controller
C3
CD Automatic Changer
Engine
Control
System
<5–3>
ACC CUT
Relay
J19
Junction
Connector
7. 5A
ACC
I18
Ignition SW
* 1 : w/ LEXUS Navigation System
Instrument Panel
Brace LH
Battery
SHORT PIN
20A RADIO NO. 1
30A RADIO NO. 2
50A AM1
140A ALT

(Cont. next page)

Audio System (w/o Rear Seat Entertainment System)

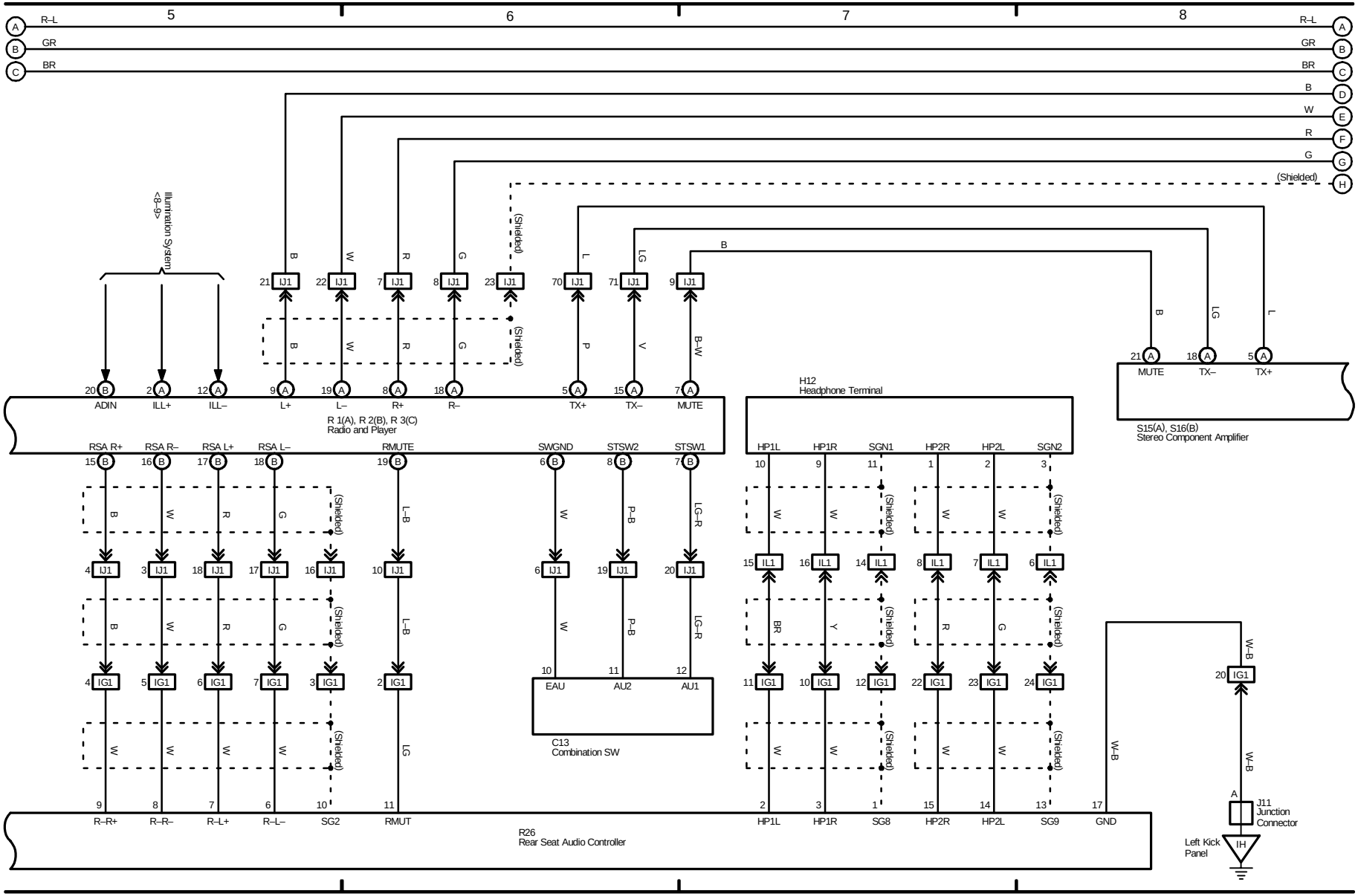

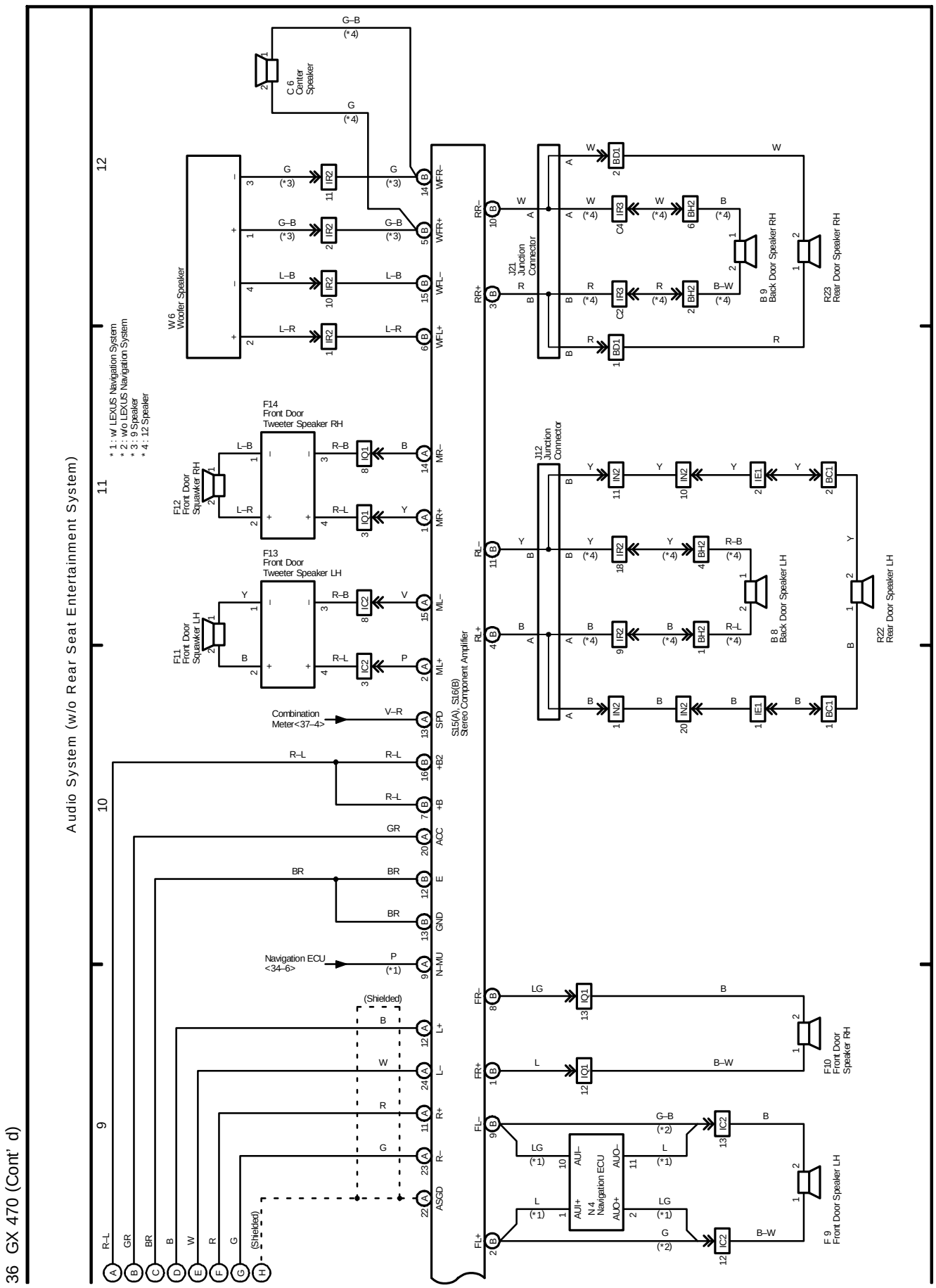
36 GX 470 (Cont' d)
Audio System (w/o Rear Seat Entertainment System)
* 1 : w/ LEXUS Navigation System
* 2 : w/o LEXUS Navigation System
* 3 : 9 Speaker
* 4 : 12 Speaker
W6 Woofer Speaker
C6 Center Speaker
F14 Front Door Tweeter Speaker RH
F12 Front Door Squawker RH
F13 Front Door Tweeter Speaker LH
F11 Front Door Squawker LH
Combination Meter<37–4>
Navigation ECU <34–6>
(Shielded)
S15(A), S16(B) Stereo Component Amplifier
J21 Junction Connector
J12 Junction Connector
B 9 Back Door Speaker RH
R23 Rear Door Speaker RH
B 8 Back Door Speaker LH
R22 Rear Door Speaker LH
F10 Front Door Speaker RH
F 9 Front Door Speaker LH
N 4 Navigation ECU

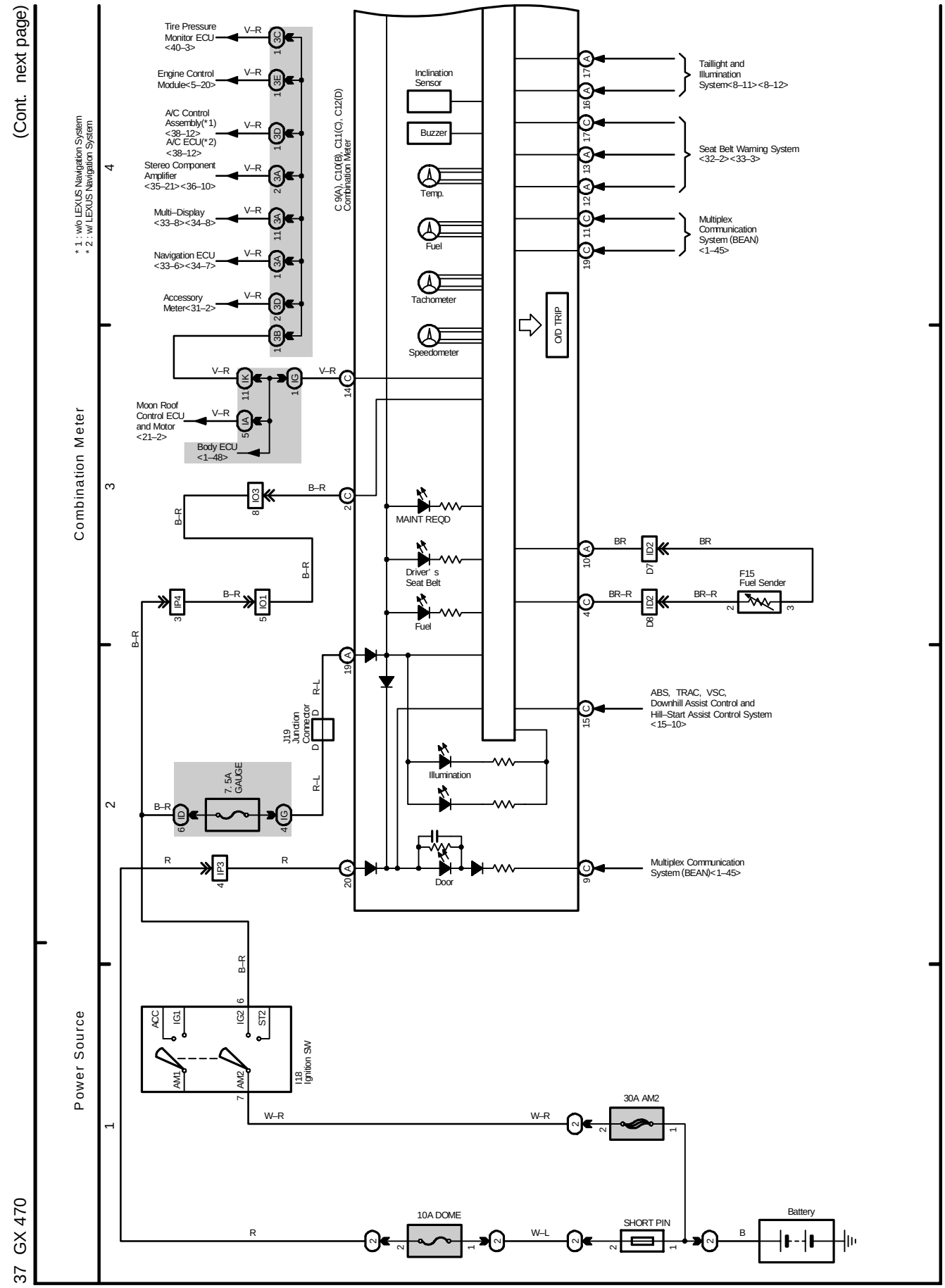
(Cont. next page)
* 1 : w/o LEXUS Navigation System
* 2 : w/ LEXUS Navigation System
Combination Meter
Power Source
Tire Pressure Monitor ECU <40–3>
Engine Control Module<5–20>
A/C Control Assembly(*1) <38–12>
A/C ECU(*2) <38–12>
Stereo Component Amplifier <35–21><36–10>
Multi–Display <33–8><34–8>
Navigation ECU <33–6><34–7>
Accessory Meter<31–2>
Moon Roof Control ECU and Motor <21–2>
Body ECU <1–48>
C 9(A), C10(B), C11(C), C12(D) Combination Meter
Inclination Sensor
Buzzer
Temp.
Fuel
Tachometer
Speedometer
O/D TRIP
MAINT REQD
Driver' s Seat Belt
Fuel
Illumination
Door
Taillight and Illumination System<8–11><8–12>
Seat Belt Warning System <32–2><33–3>
Multiplex Communication System (BEAN) <1–45>
F15 Fuel Sender
ABS, TRAC, VSC, Downhill Assist Control and Hill–Start Assist Control System <15–10>
Multiplex Communication System (BEAN)<1–45>
J19 Junction Connector
7.5A GAUGE
I18 Ignition SW
ACC
IG1
IG2
ST2
AM1
AM2
30A AM2
10A DOME
SHORT PIN
Battery
37 GX 470

(Cont. next page)

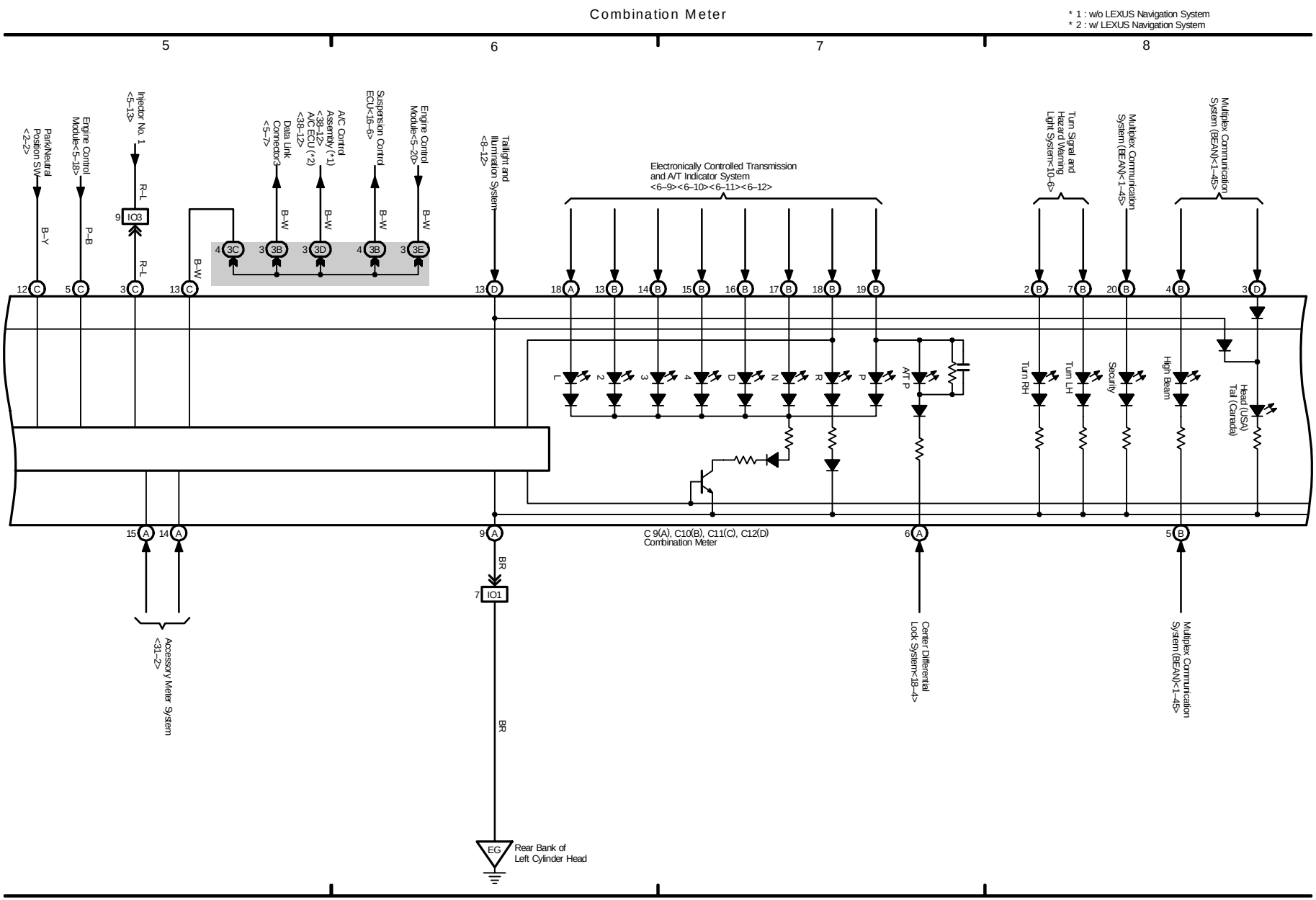

37 GX 470 (Cont' d)

(Cont. next page)

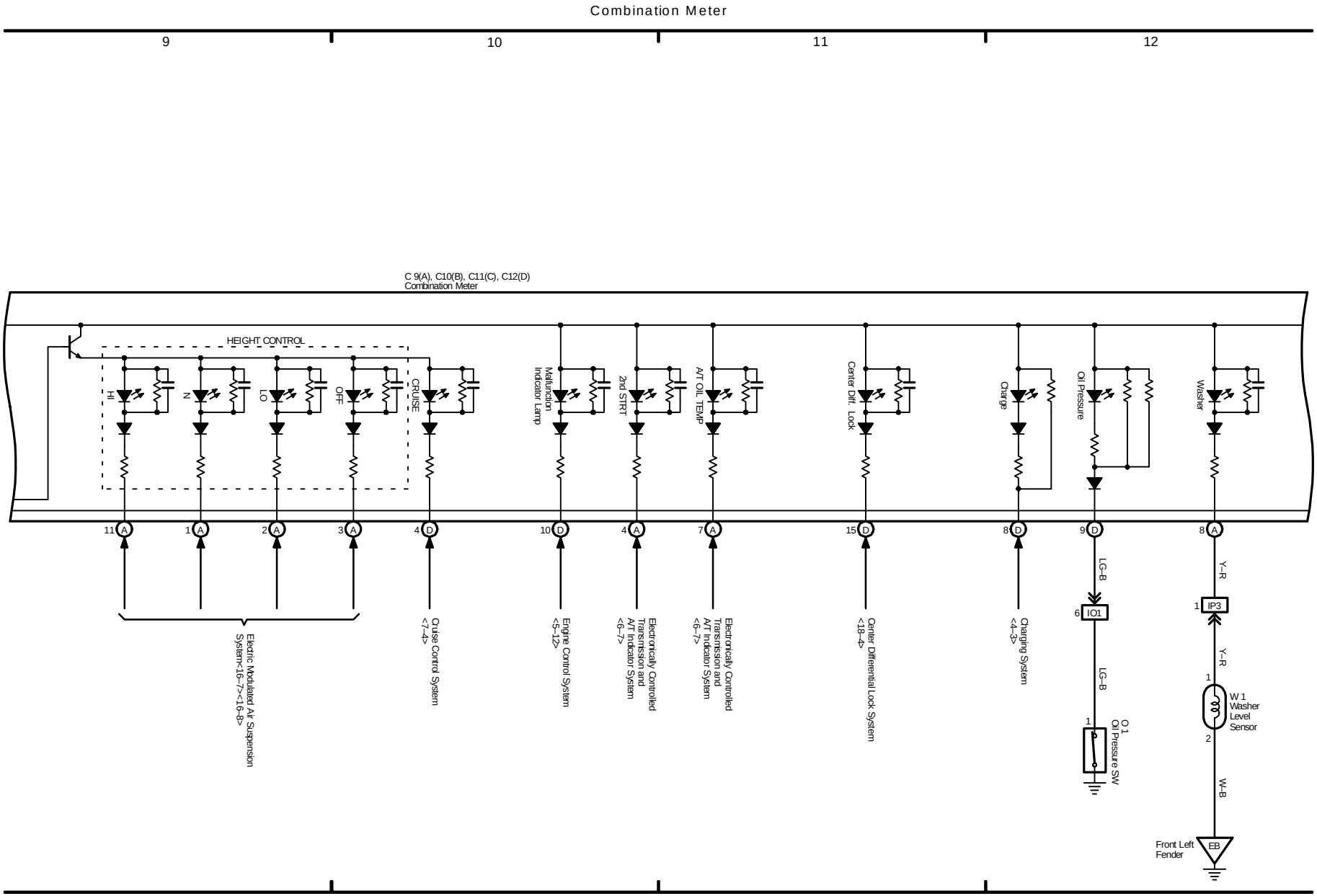

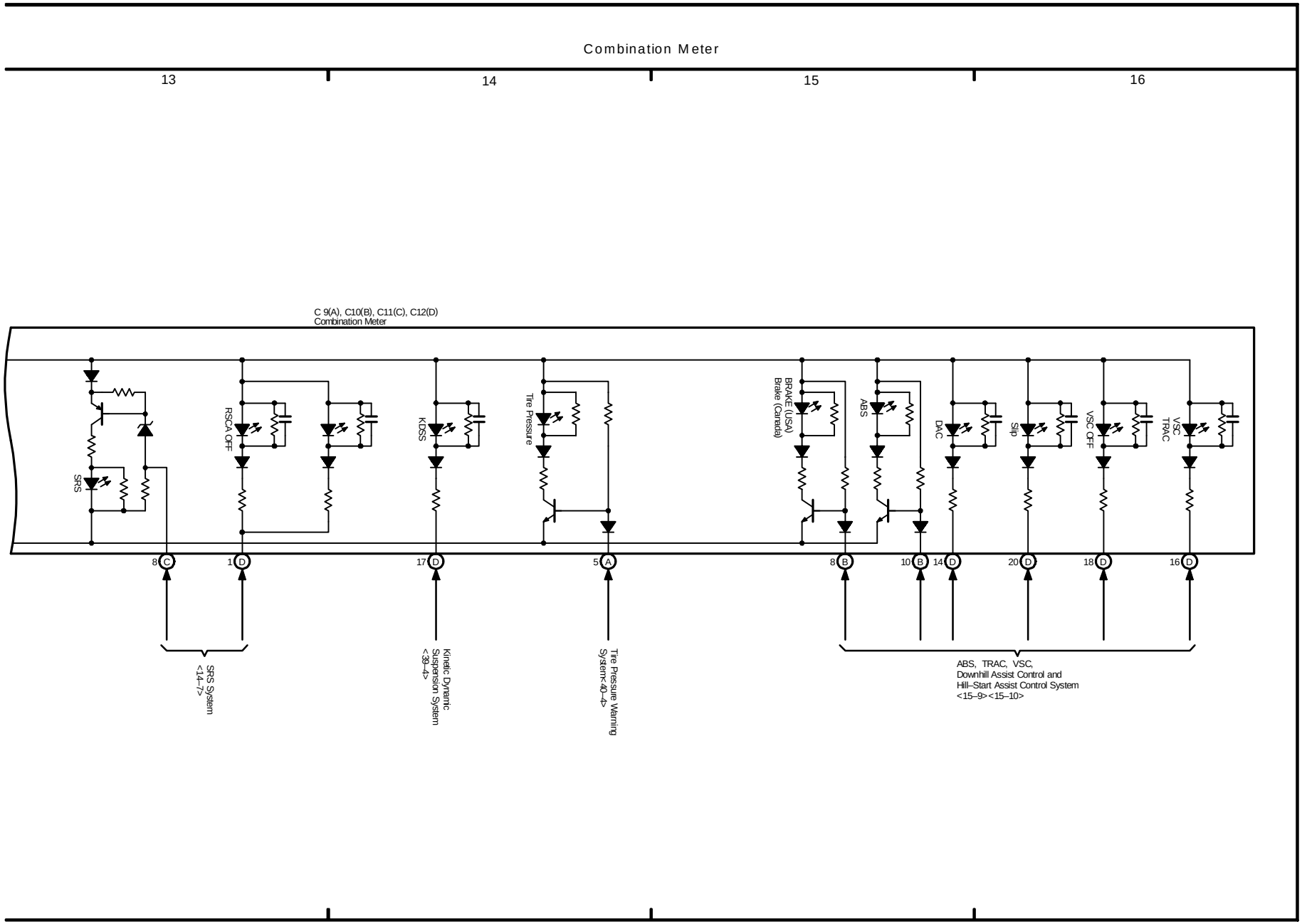
Combination Meter
13
14
15
16
C 9(A), C10(B), C11(C), C12(D)
Combination Meter
SRS
RSCA OFF
KDSS
Tire Pressure
BRAKE (USA)
Brake (Canada)
ABS
DVC
Slip
VSC OFF
VSC
TRAC
8 C
1 D
17 D
5 A
8 B
10 B
14 D
20 D
18 D
16 D
SRS System
<14–7>
Kinetic Dynamic
Suspension System
<39–4>
Tire Pressure Warning
System<40–4>
ABS, TRAC, VSC,
Downhill Assist Control and
Hill–Start Assist Control System
<15–9><15–10>

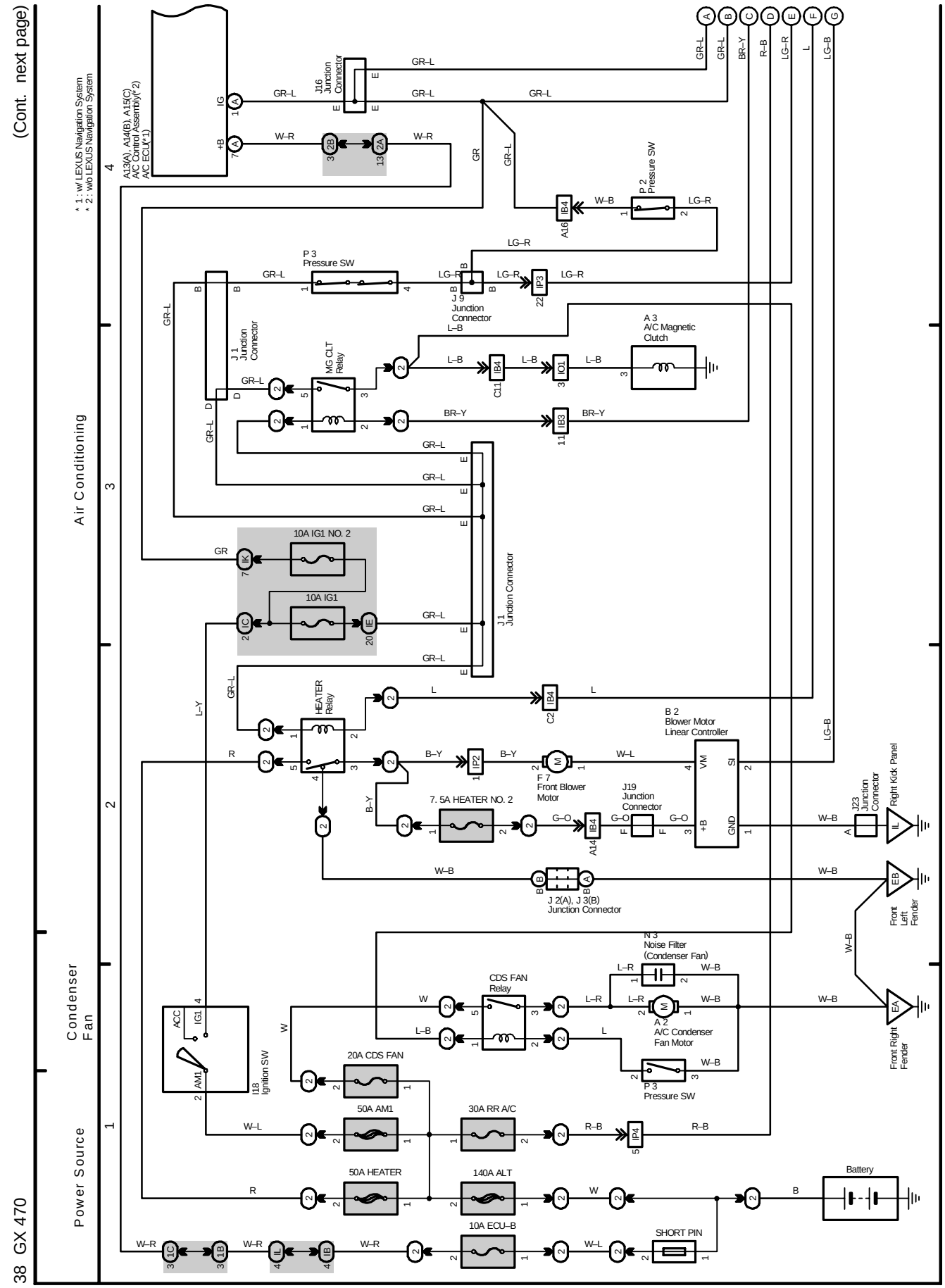
(Cont. next page)
* 1 : w/ LEXUS Navigation System
* 2 : w/o LEXUS Navigation System
A13(A), A14(B), A15(C)
A/C Control Assembly(*2)
A/C ECU(*1)
J16 Junction Connector
P 2 Pressure SW
P 3 Pressure SW
J 9 Junction Connector
J 1 Junction Connector
MG CLT Relay
A 3 A/C Magnetic Clutch
10A IG1 NO. 2
10A IG1
J 1 Junction Connector
HEATER Relay
B 2 Blower Motor Linear Controller
F 7 Front Blower Motor
7. 5A HEATER NO. 2
J19 Junction Connector
J23 Junction Connector
Right Kick Panel
J 2(A), J 3(B) Junction Connector
Front Left Fender
Front Right Fender
N 3 Noise Filter (Condenser Fan)
CDS FAN Relay
A 2 A/C Condenser Fan Motor
P 3 Pressure SW
I18 Ignition SW
20A CDS FAN
50A AM1
30A RR A/C
50A HEATER
140A ALT
Battery
10A ECU–B
SHORT PIN
Air Conditioning
Condenser Fan
Power Source
38 GX 470

(Cont. next page)

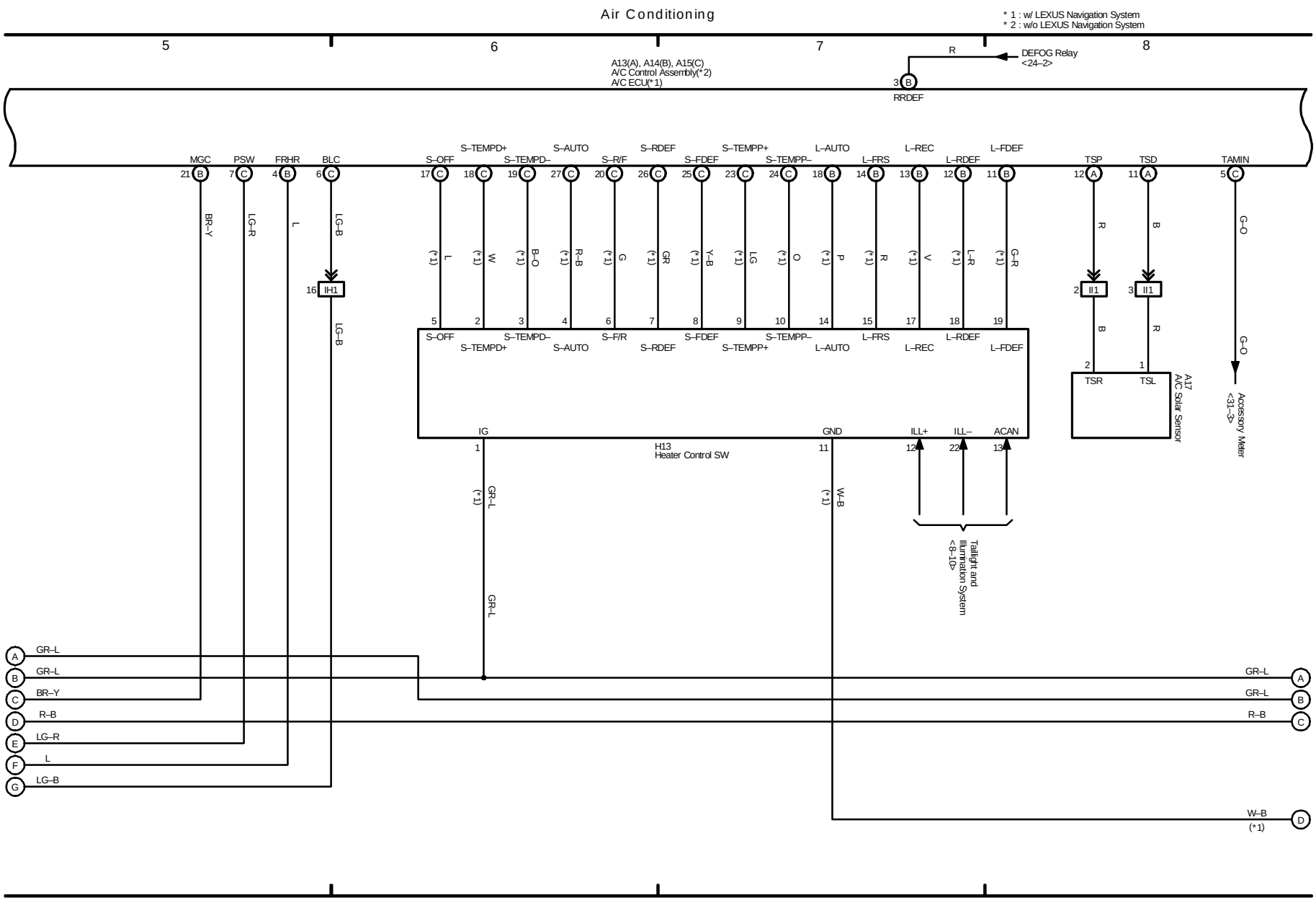

38 GX 470 (Cont' d)

(Cont. next page)

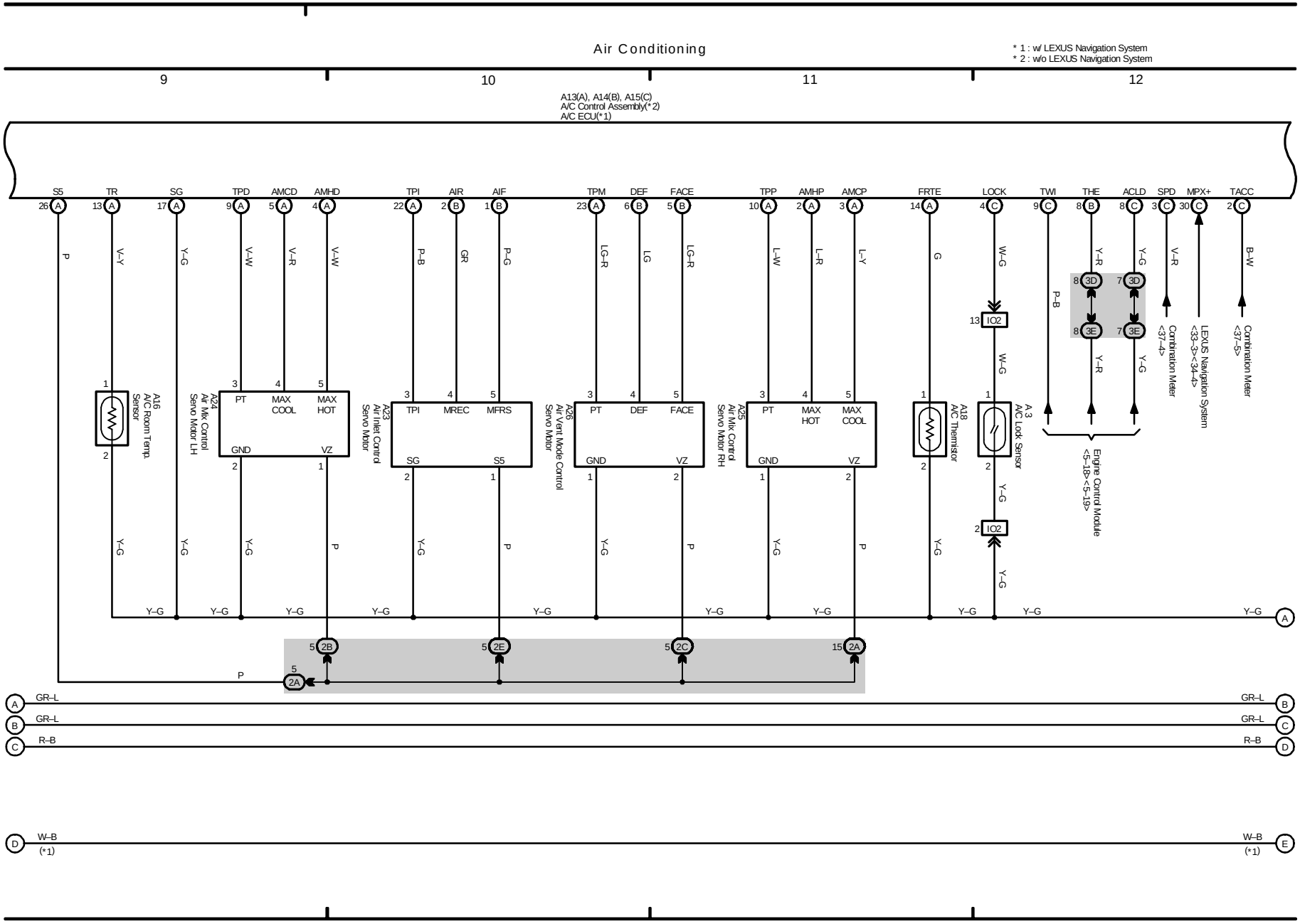

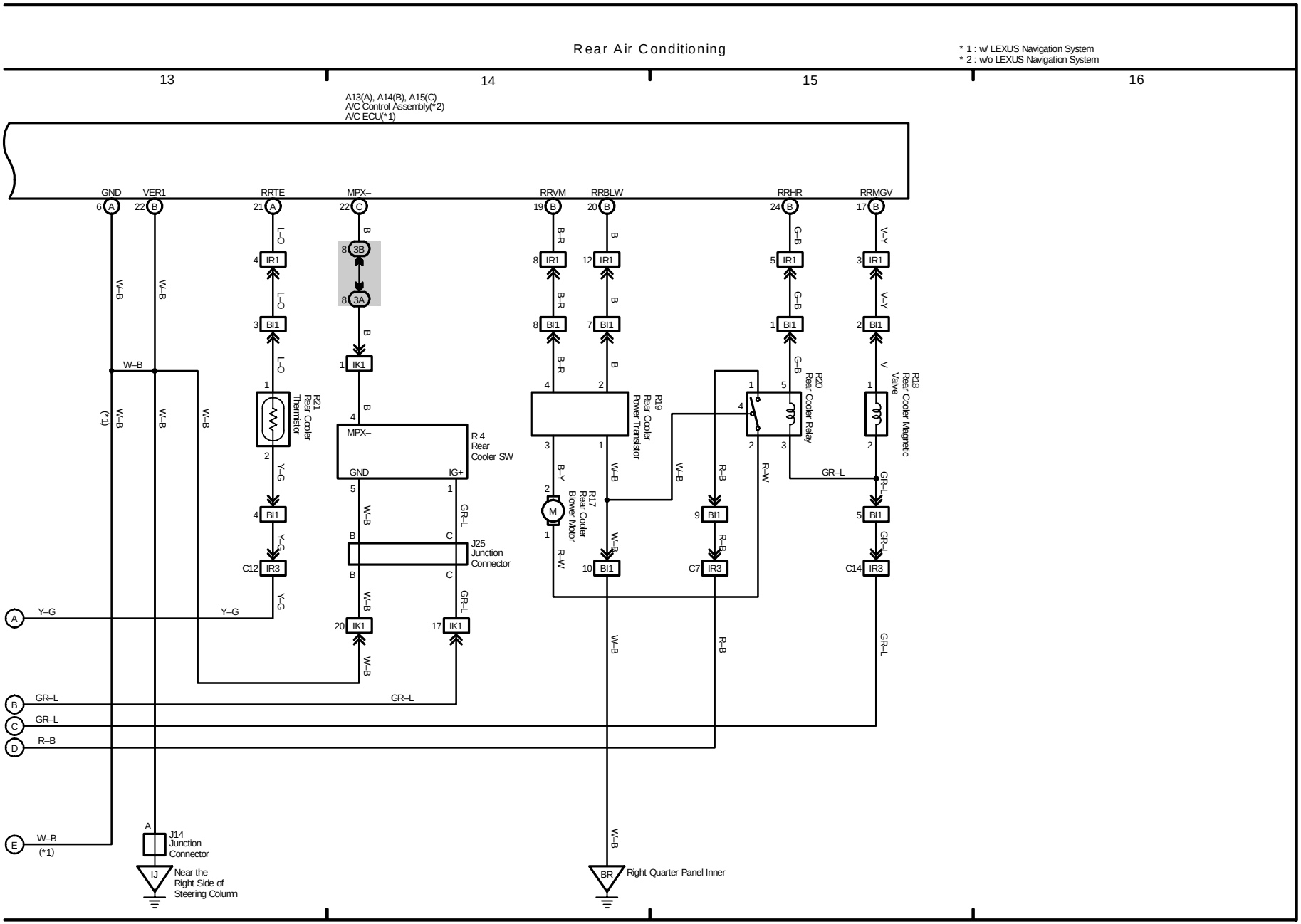
Rear Air Conditioning
* 1 : w/ LEXUS Navigation System
* 2 : w/o LEXUS Navigation System
13
14
15
16
A13(A), A14(B), A15(C)
A/C Control Assembly(*2)
A/C ECU(*1)
GND
VER1
RRTE
MPX–
RRVM
RRBLW
RRHR
RRMGV
R21 Rear Cooler Thermistor
R 4 Rear Cooler SW
J25 Junction Connector
R19 Rear Cooler Power Transistor
R17 Rear Cooler Blower Motor
R20 Rear Cooler Relay
R18 Rear Cooler Magnetic Valve
J14 Junction Connector
Near the Right Side of Steering Column
Right Quarter Panel Inner

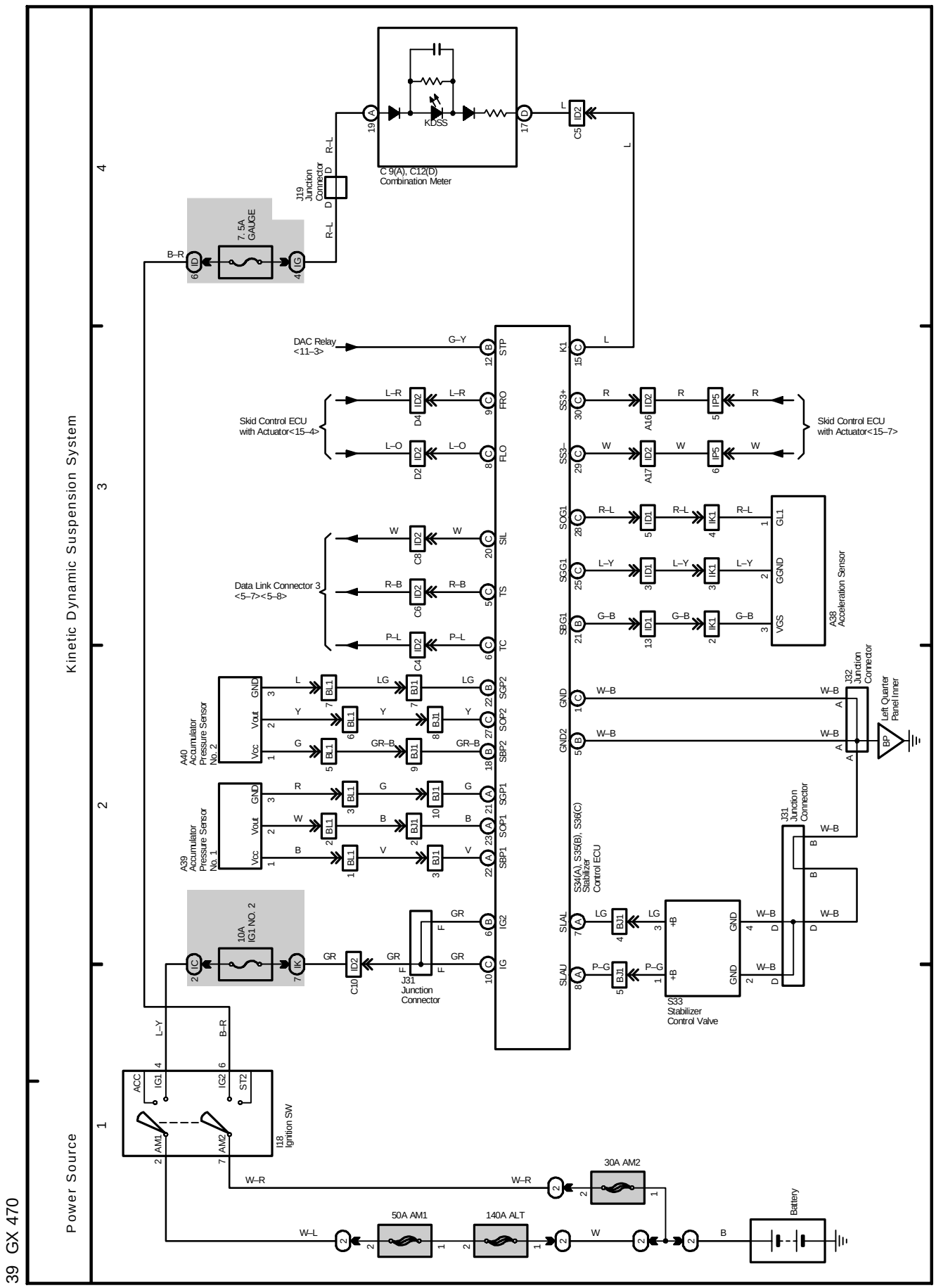
Kinetic Dynamic Suspension System
Power Source
C 9(A), C12(D)
Combination Meter
KDSS
J19
Junction
Connector
7.5A
GAUGE
DAC Relay
<11–3>
Skid Control ECU
with Actuator<15–4>
Skid Control ECU
with Actuator<15–7>
Data Link Connector 3
<5–7><5–8>
A40
Accumulator
Pressure Sensor
No. 2
A39
Accumulator
Pressure Sensor
No. 1
10A
IG1 NO. 2
J31
Junction
Connector
S34(A), S35(B), S36(C)
Stabilizer
Control ECU
S33
Stabilizer
Control Valve
A38
Acceleration Sensor
J32
Junction
Connector
Left Quarter
Panel Inner
BP
I18
Ignition SW
30A AM2
50A AM1
140A ALT
Battery

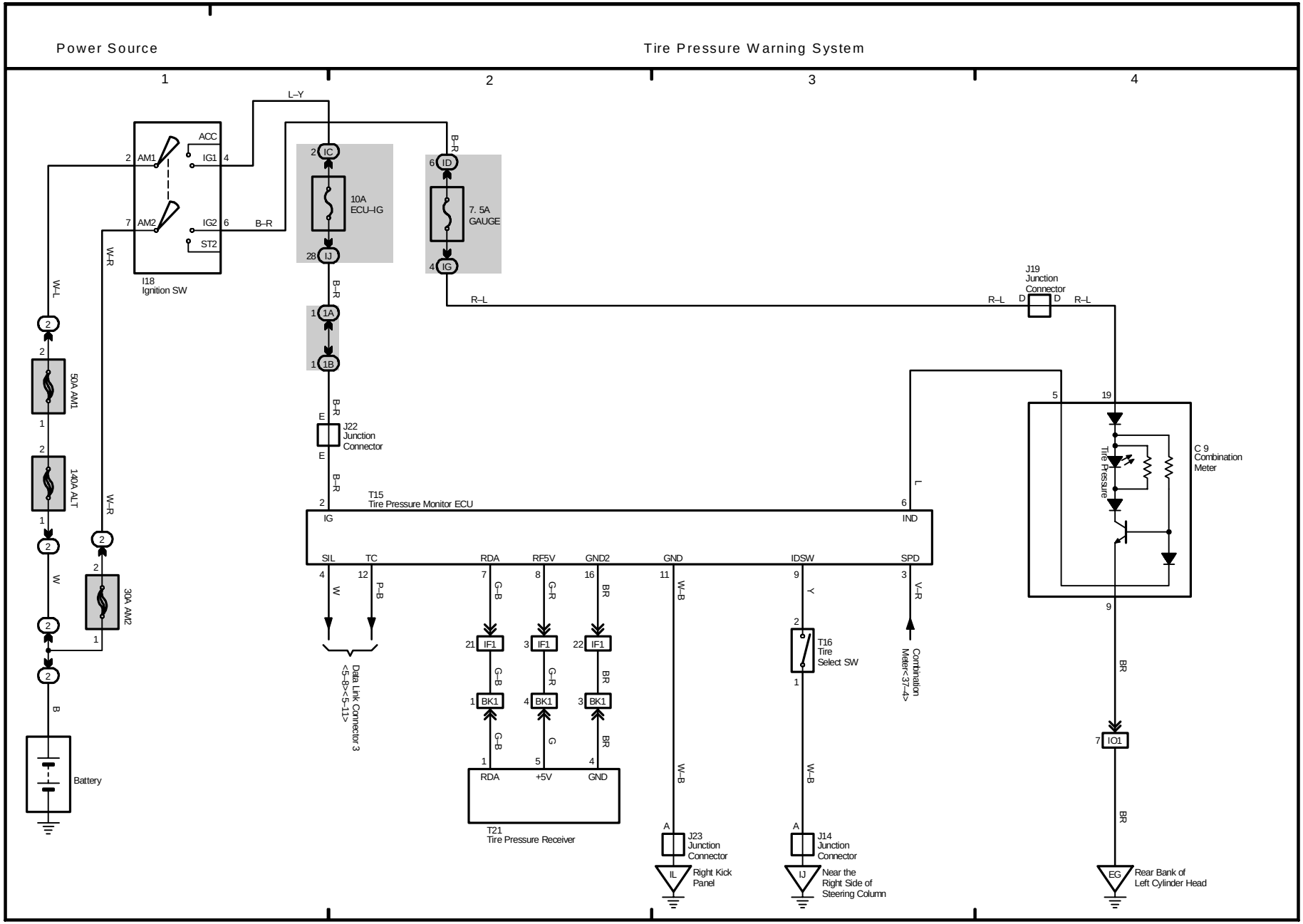
Power Source
Tire Pressure Warning System
1
2
3
4
L–Y
ACC
AM1
IG1
AM2
IG2
ST2
I18
Ignition SW
B–R
W–R
W–L
50A AM1
140A ALT
30A AM2
W
B
Battery
IC
10A
ECU–IG
IJ
ID
7. 5A
GAUGE
IG
1A
1B
J22
Junction
Connector
E
R–L
J19
Junction
Connector
D
T15
Tire Pressure Monitor ECU
IG
IND
L
SIL
TC
RDA
RF5V
GND2
GND
IDSW
SPD
P–B
G–B
G–R
BR
V–R
Y
IF1
BK1
G
Data Link Connector 3
<5–8><5–11>
T21
Tire Pressure Receiver
+5V
T16
Tire
Select SW
Combination
Meter<3/7–4>
C 9
Combination
Meter
Tire Pressure
IO1
J23
Junction
Connector
Right Kick
Panel
IL
J14
Junction
Connector
Near the
Right Side of
Steering Column
IJ
EG
Rear Bank of
Left Cylinder Head