[Instrument Panel J/B Assembly Inner Circuit]

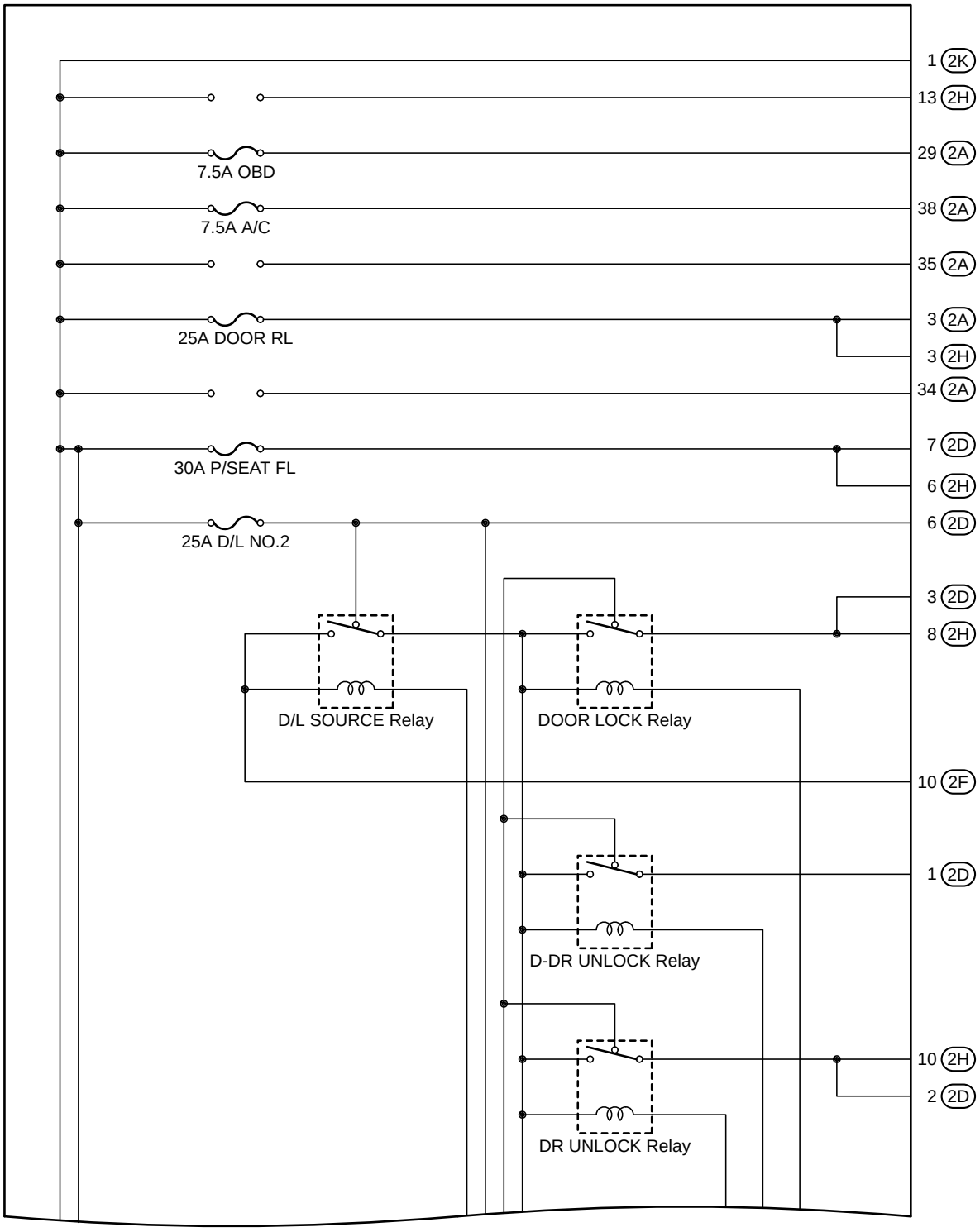

(Cont. Next Page)

[Instrument Panel J/B Assembly Inner Circuit]

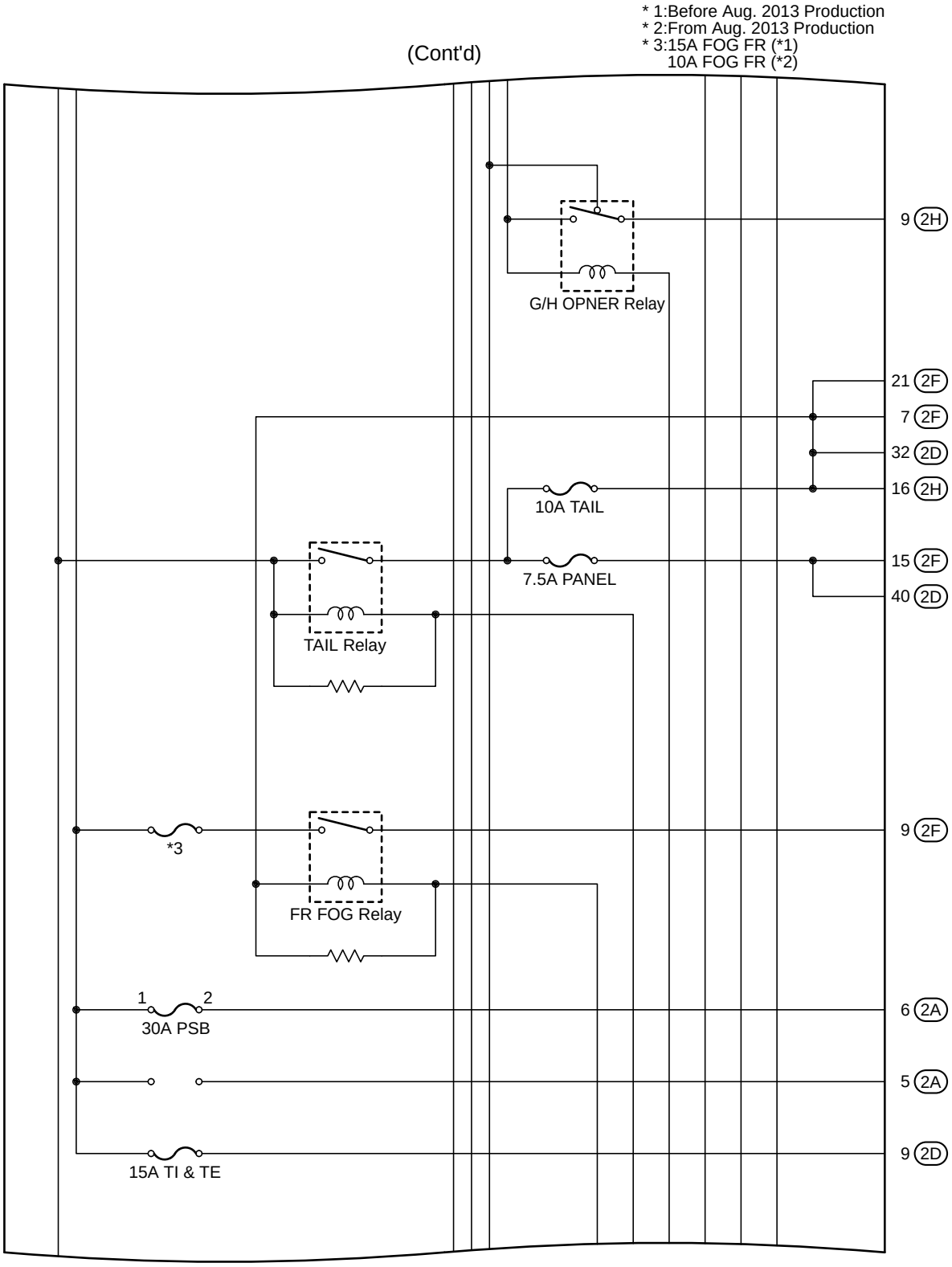

(Cont. Next Page)

[Instrument Panel J/B Assembly Inner Circuit]

(Cont'd)

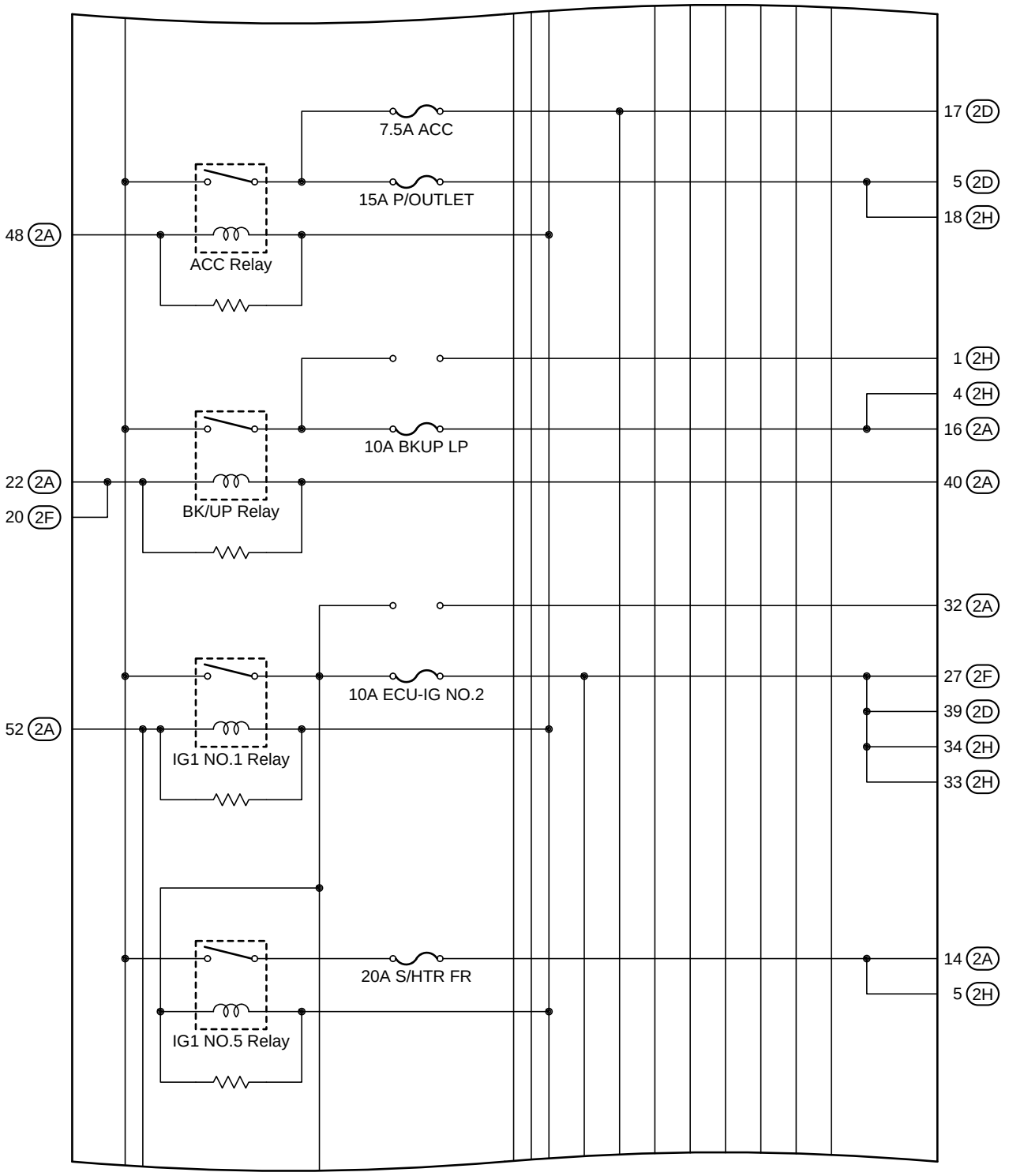

(Cont. Next Page)

[Instrument Panel J/B Assembly Inner Circuit]

(Cont'd)

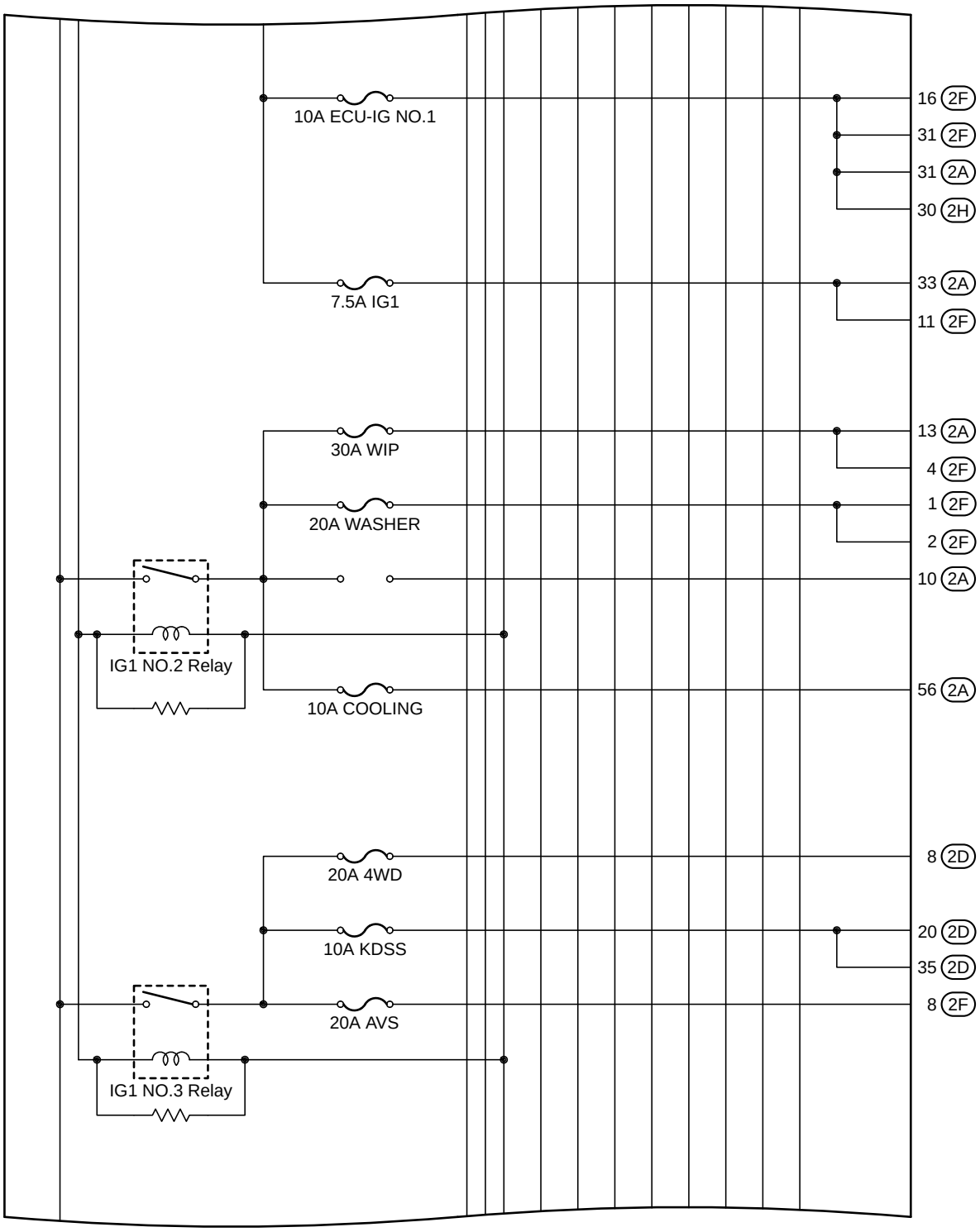

(Cont. Next Page)

[Instrument Panel J/B Assembly Inner Circuit]

(Cont'd)

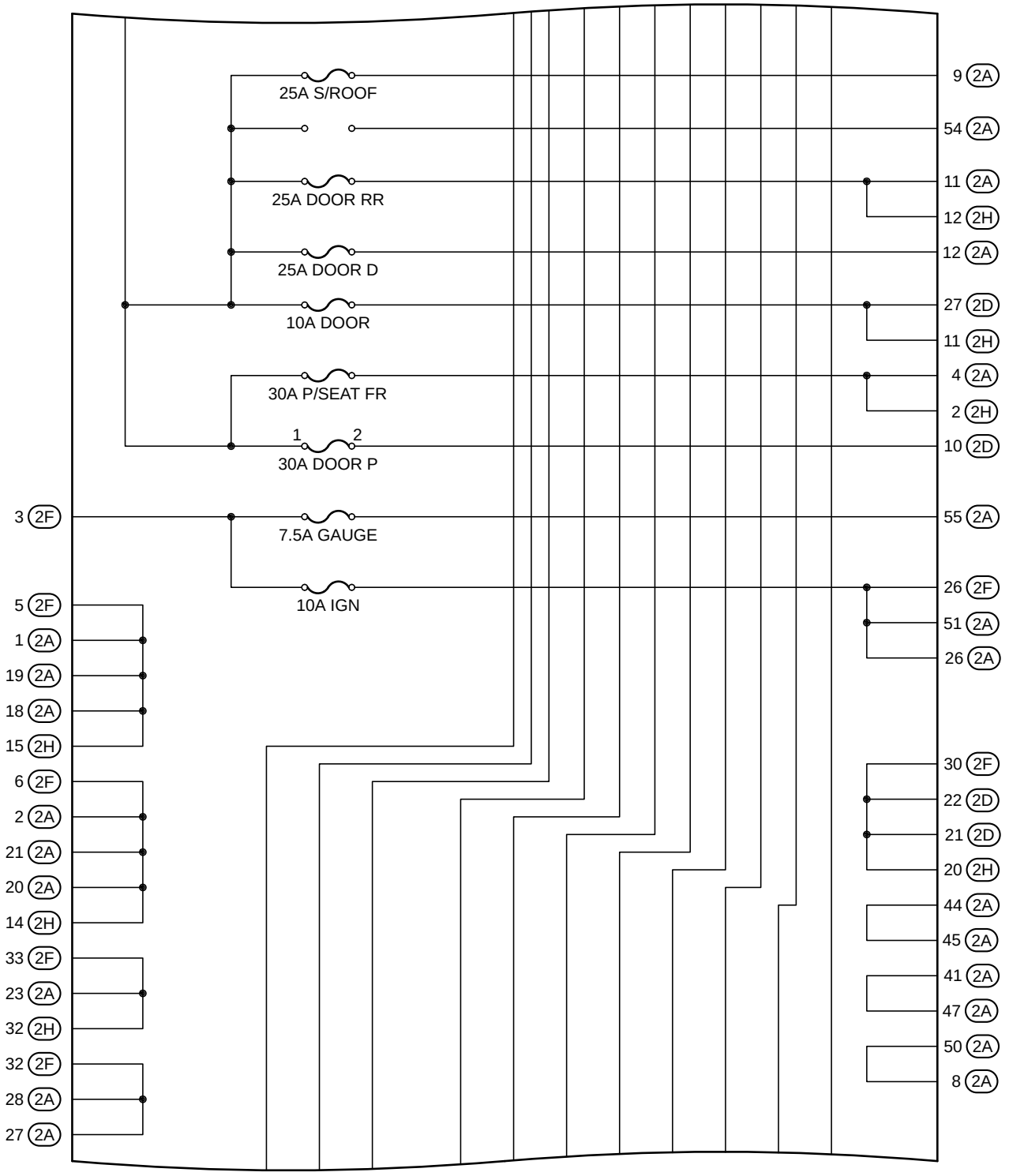

(Cont. Next Page)
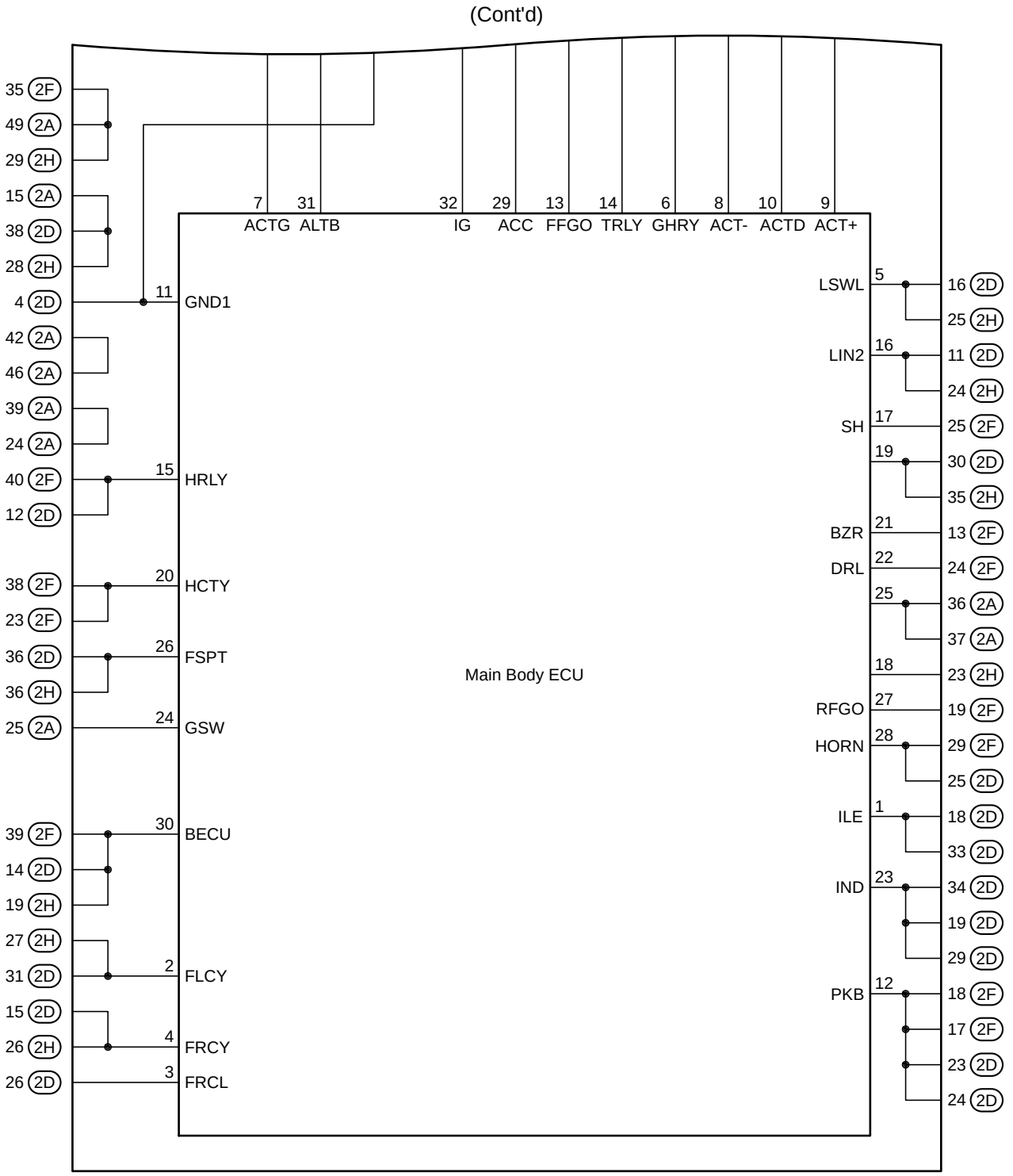
[Instrument Panel J/B Assembly Inner Circuit]