29 IS 300C / IS 250C

(Cont. next page)

Climate Control Seat or Seat Heater

∗1 : w/ Climate Control Seat

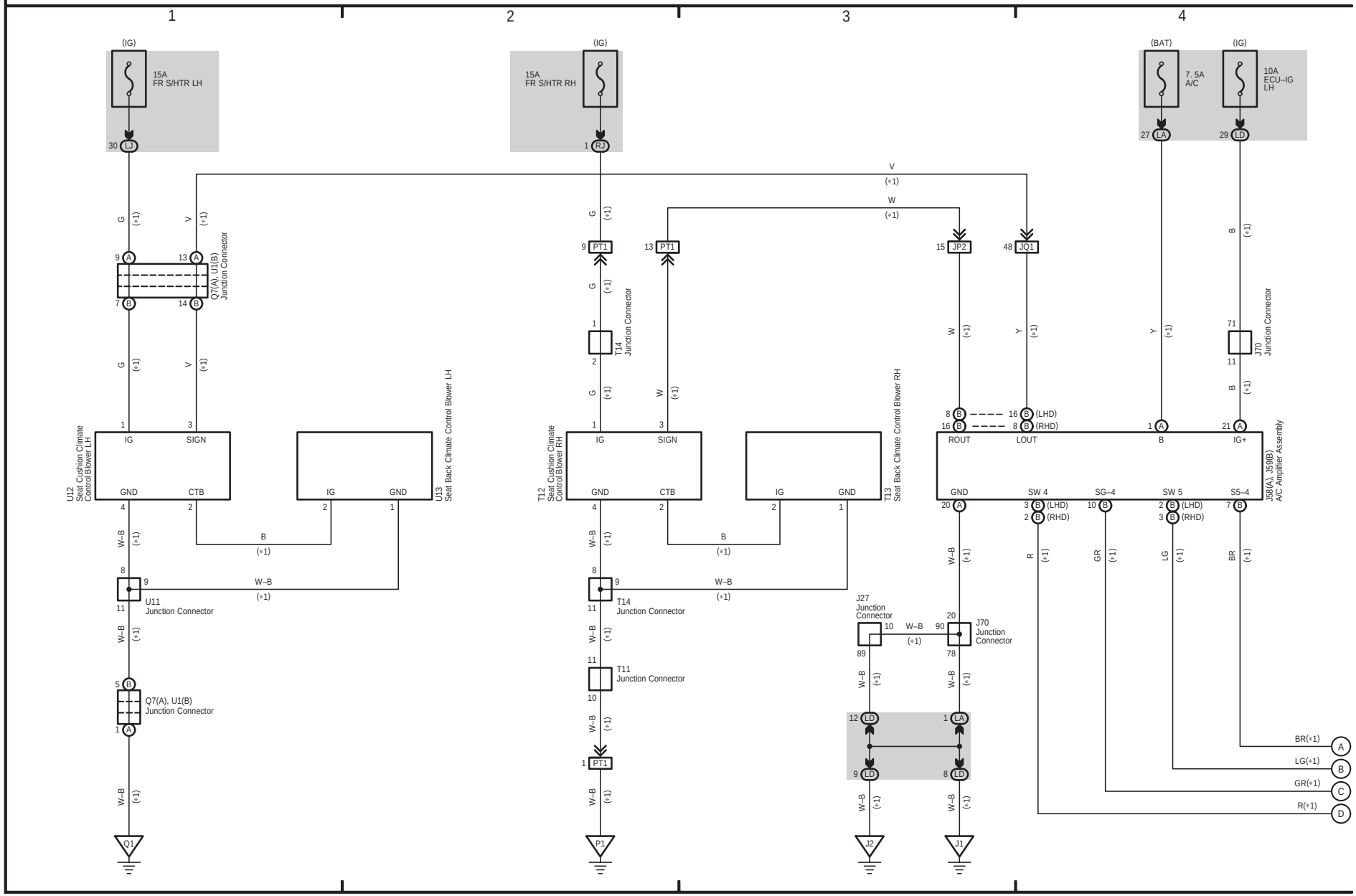

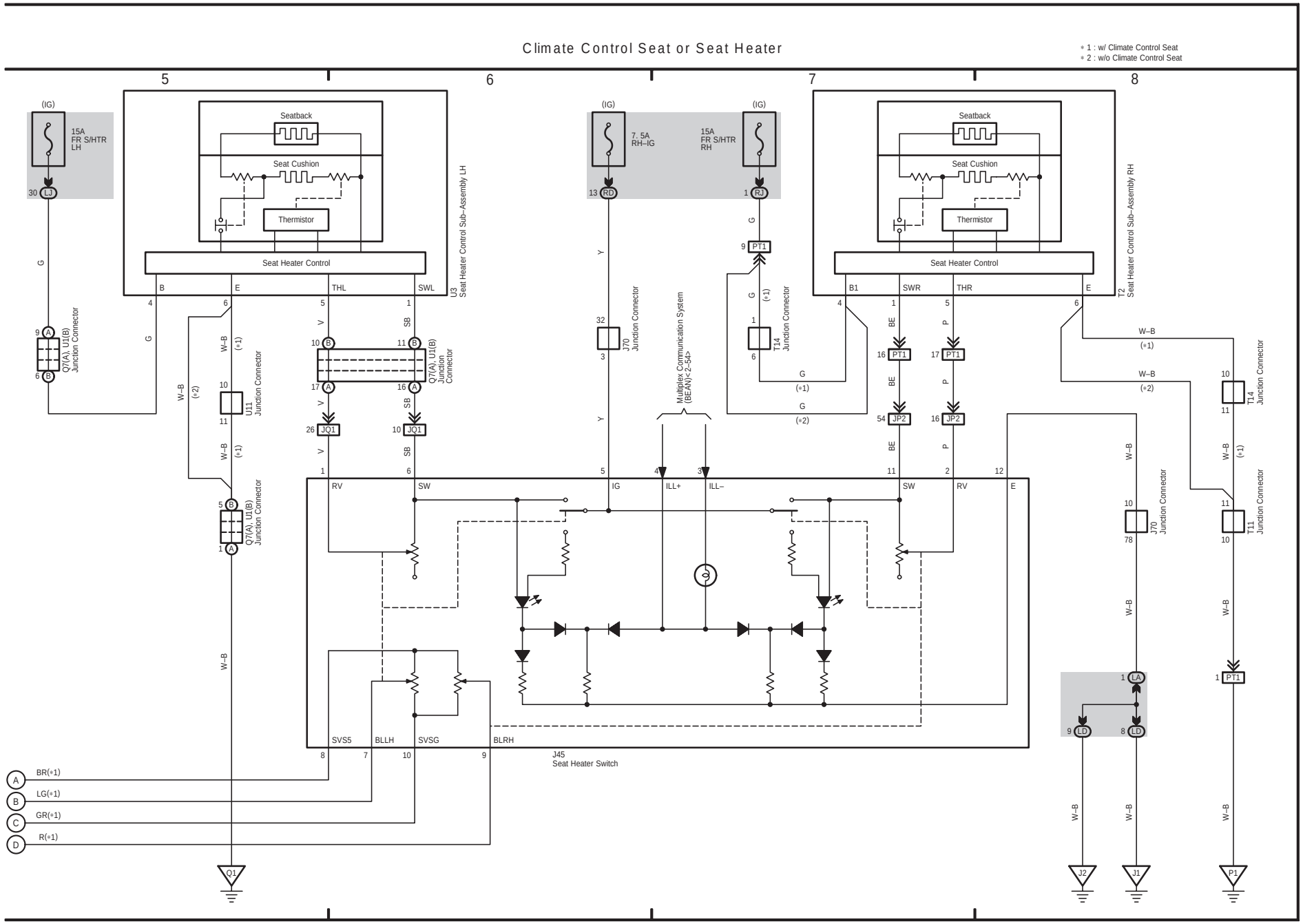

LEXUS IS 300C / IS 250C (EM13B4E)

M