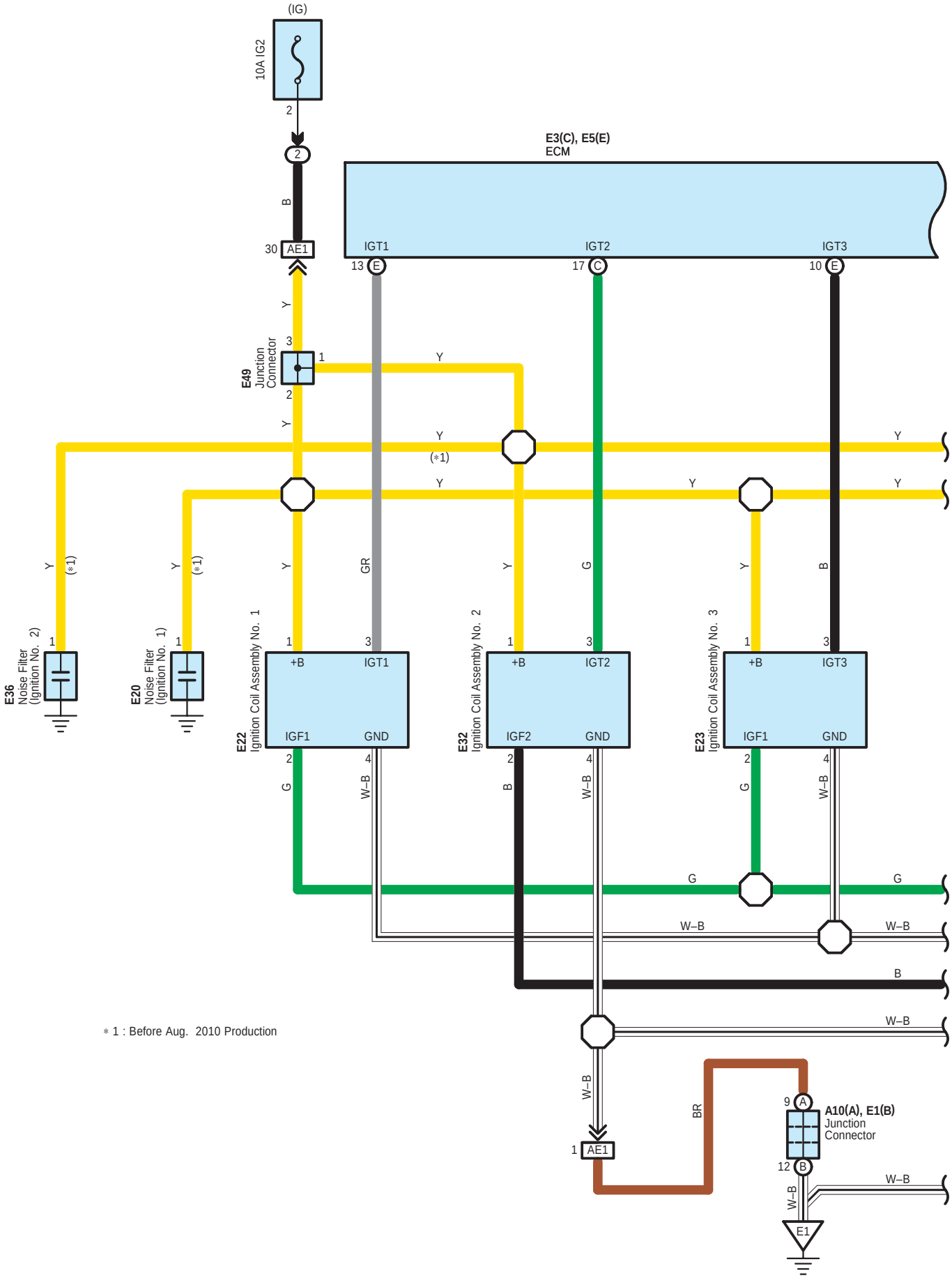

* 1 : Before Aug. 2010 Production

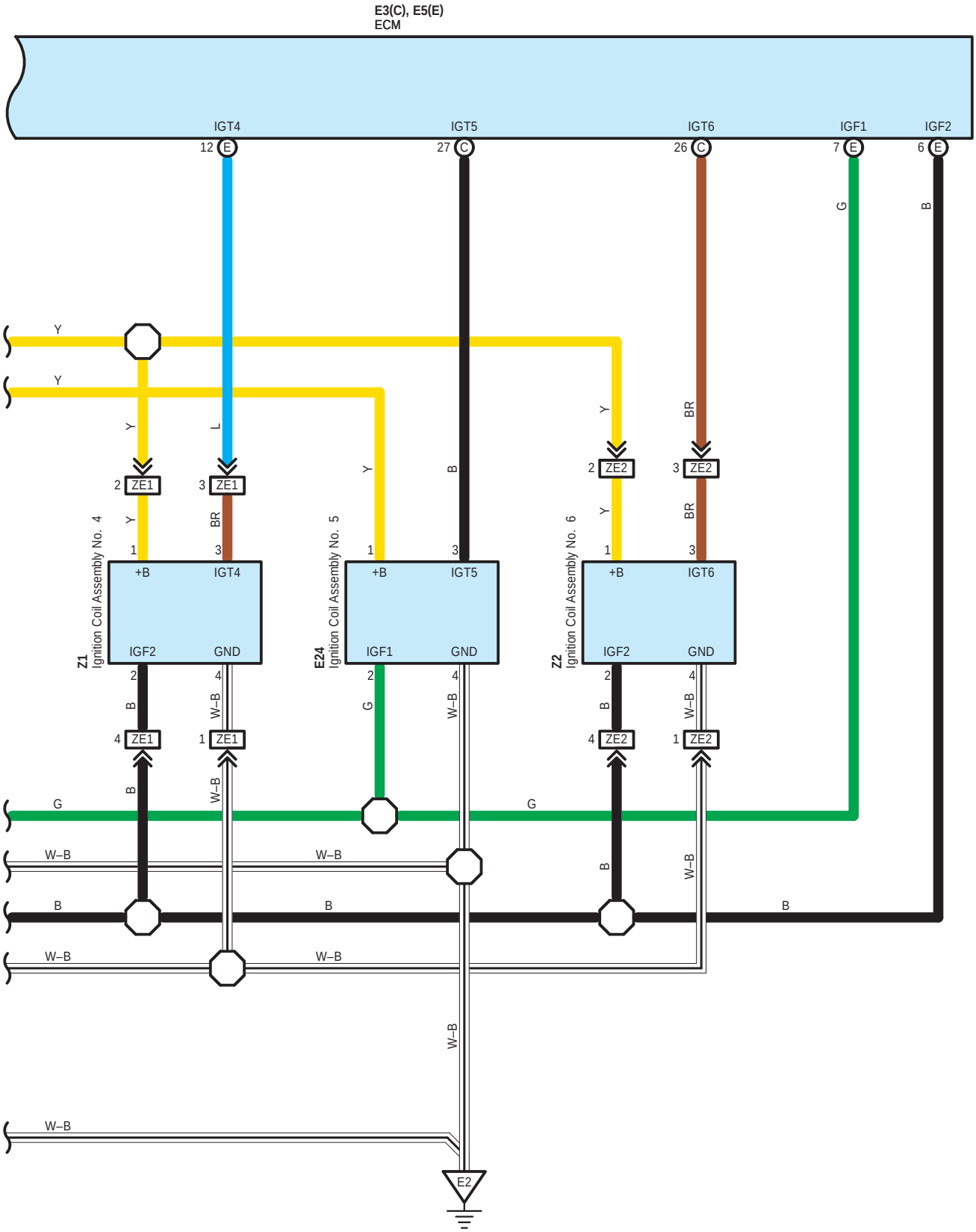
E3(C), E5(E)
ECM
IGT4
IGT5
IGT6
IGF1
IGF2
12 E
27 C
26 C
7 E
6 E
Y
L
BR
G
B
2 ZE1
3 ZE1
2 ZE2
3 ZE2
Z1
Ignition Coil Assembly No. 4
E24
Ignition Coil Assembly No. 5
Z2
Ignition Coil Assembly No. 6
+B
IGT4
IGF2
GND
IGF1
IGT5
IGT6
W–B
4 ZE1
1 ZE1
4 ZE2
1 ZE2
E2

A 10
Gray

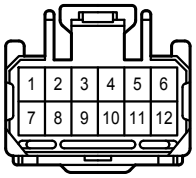

E 1
Gray

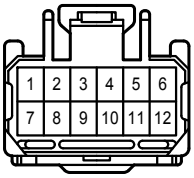

E 3
White

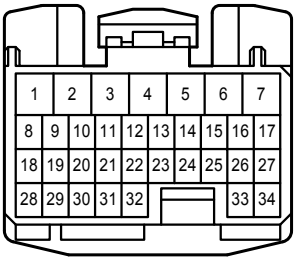

E 5
White

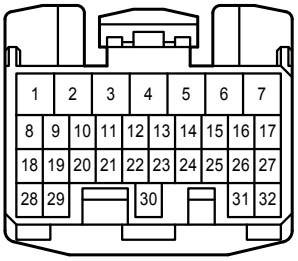

E 20
Gray

E 22
Gray

E 23
Black

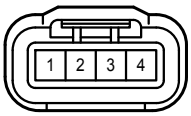

E 24
Gray

E 32
Gray

E 36
Gray

E 49
Black

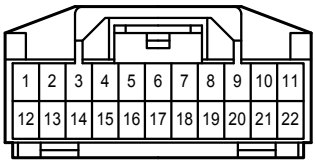

Z 1
Black

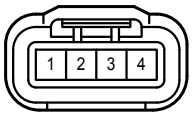

Z 2
Gray

AE1
White

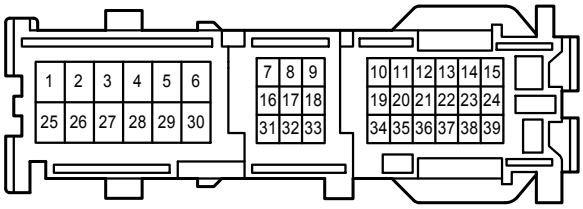

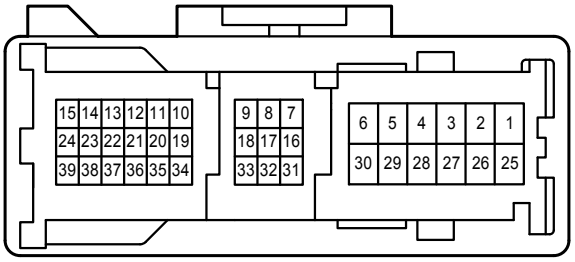

ZE1
Black

ZE2
Dark Gray