(Cont. next page)

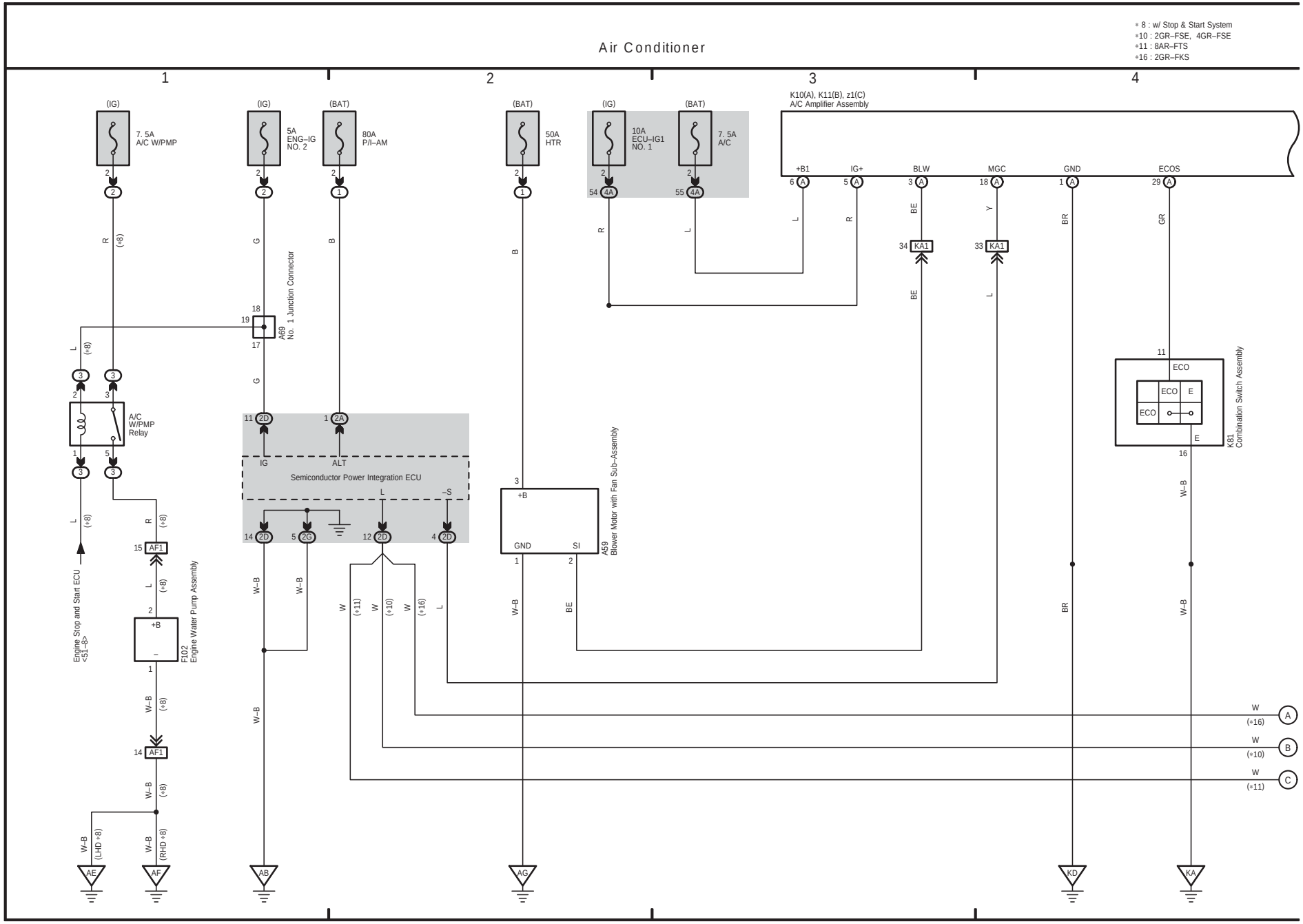

(Cont. next page)

Air Conditioner

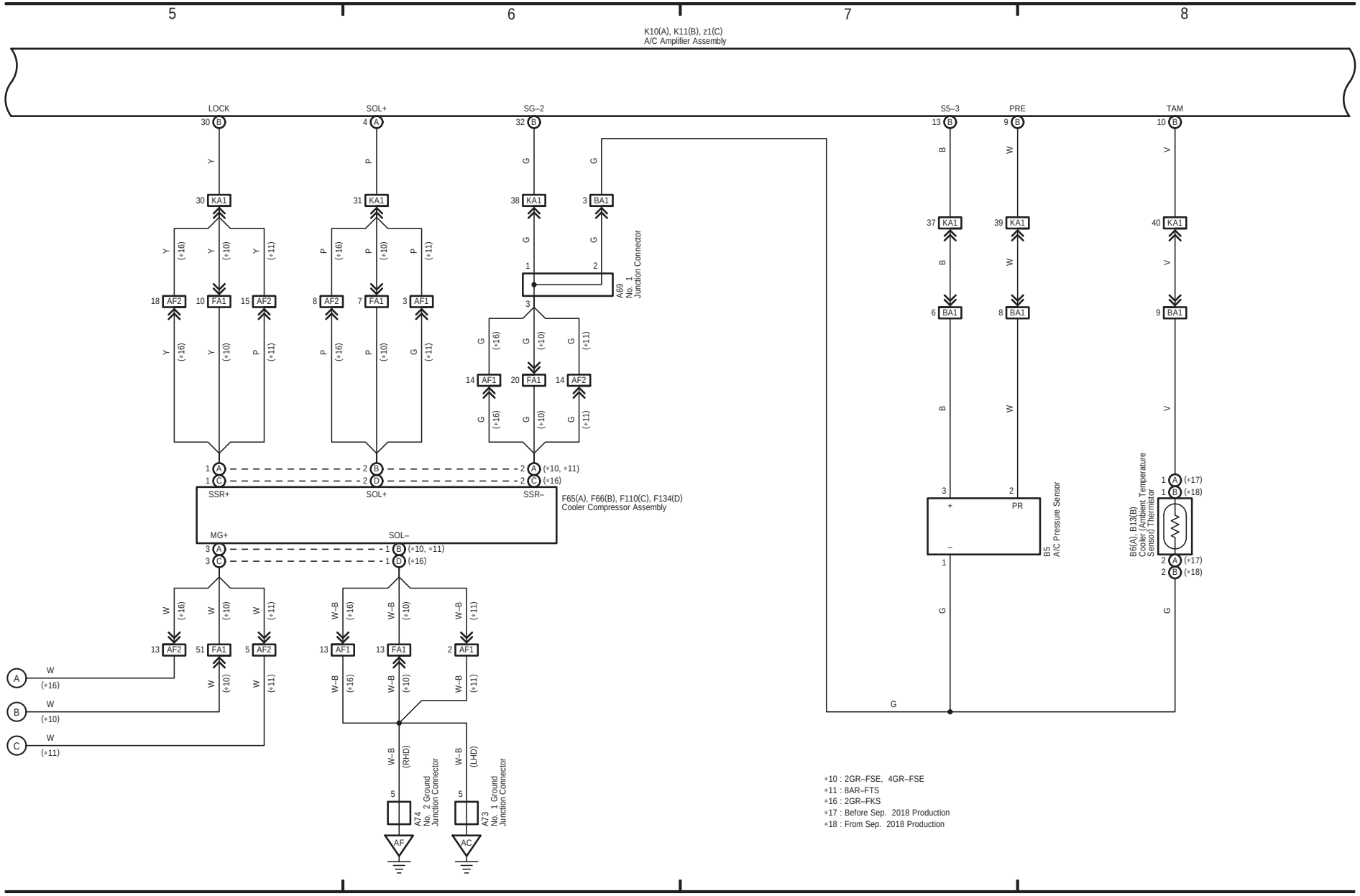

(Cont. next page)

Air Conditioner

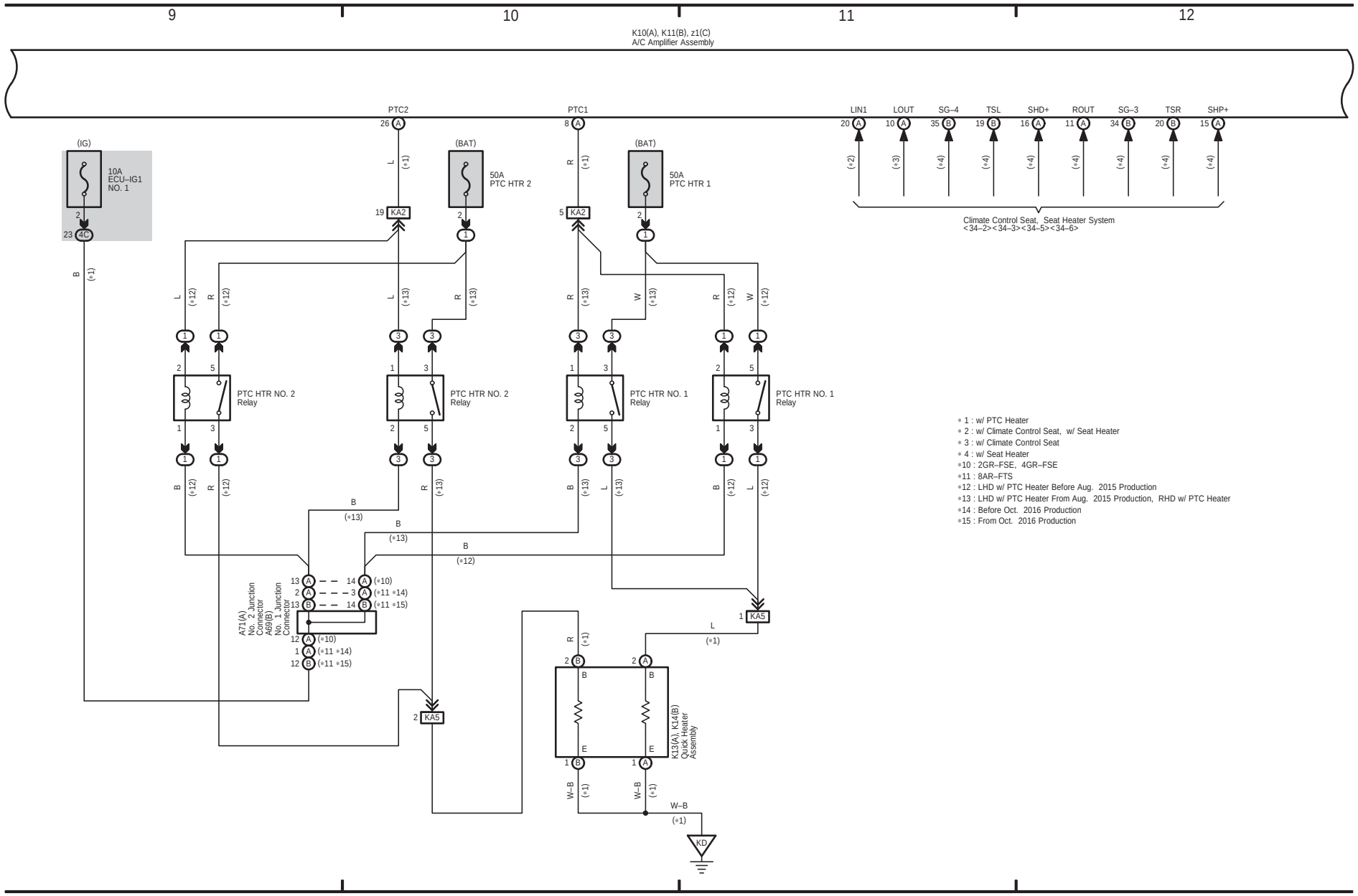

∗ 1 : w/ PTC Heater
∗ 2 : w/ Climate Control Seat, w/ Seat Heater
∗ 3 : w/ Climate Control Seat
∗ 4 : w/ Seat Heater
∗10 : 2GR–FSE, 4GR–FSE
∗11 : 8AR–FTS
∗12 : LHD w/ PTC Heater Before Aug. 2015 Production
∗13 : LHD w/ PTC Heater From Aug. 2015 Production, RHD w/ PTC Heater
∗14 : Before Oct. 2016 Production
∗15 : From Oct. 2016 Production

(Cont. next page)

* 5 : w/ PASSENGER AIRBAG ON/OFF Indicator
* 6 : w/ Front Window Deicer
* 7 : w/ Rear Passenger' s Seat Belt Warning
* 8 : w/ Stop & Start System
* 9 : w/o Stop & Start System

Air Conditioner

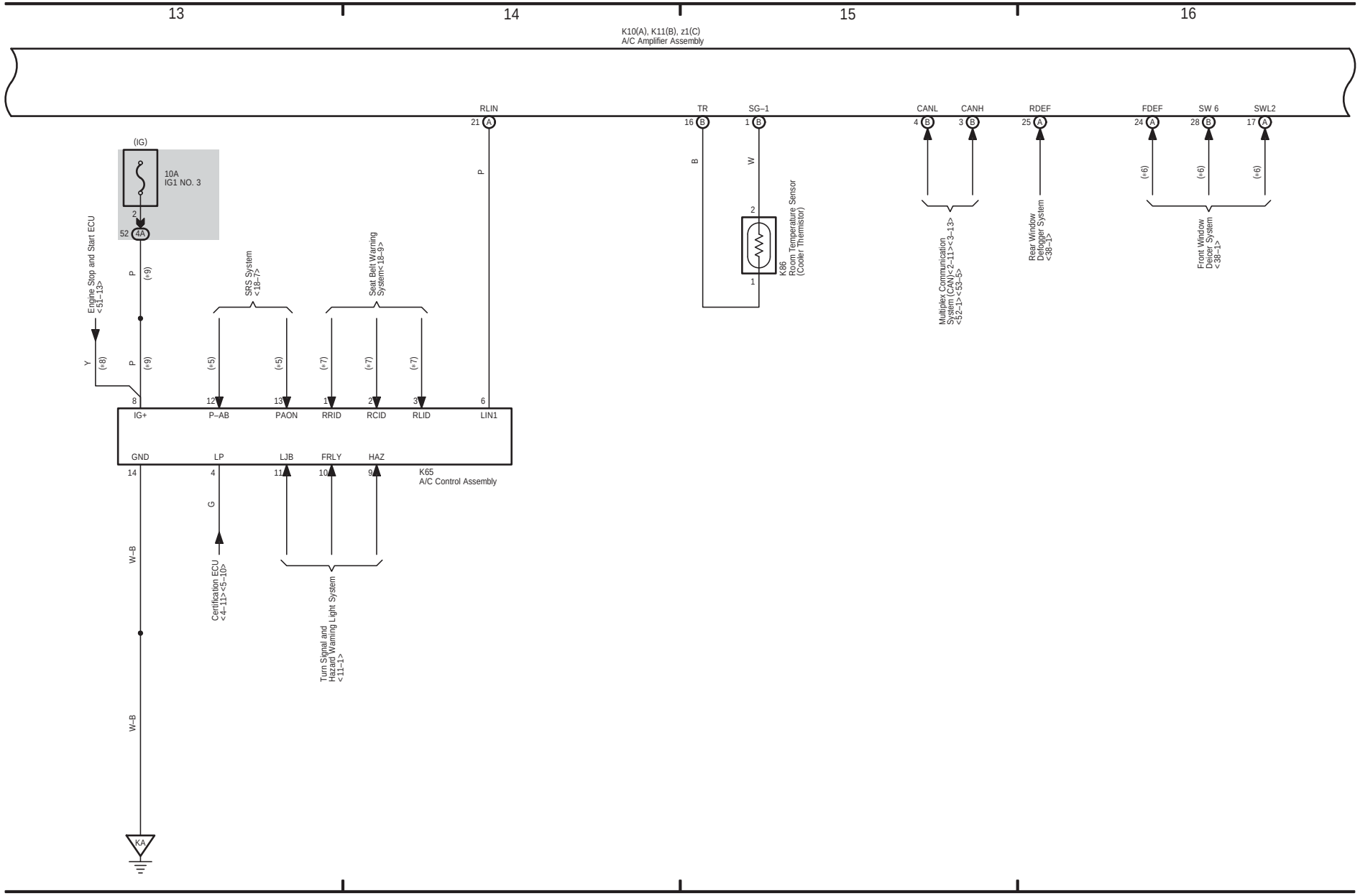

(Cont. next page)

Air Conditioner

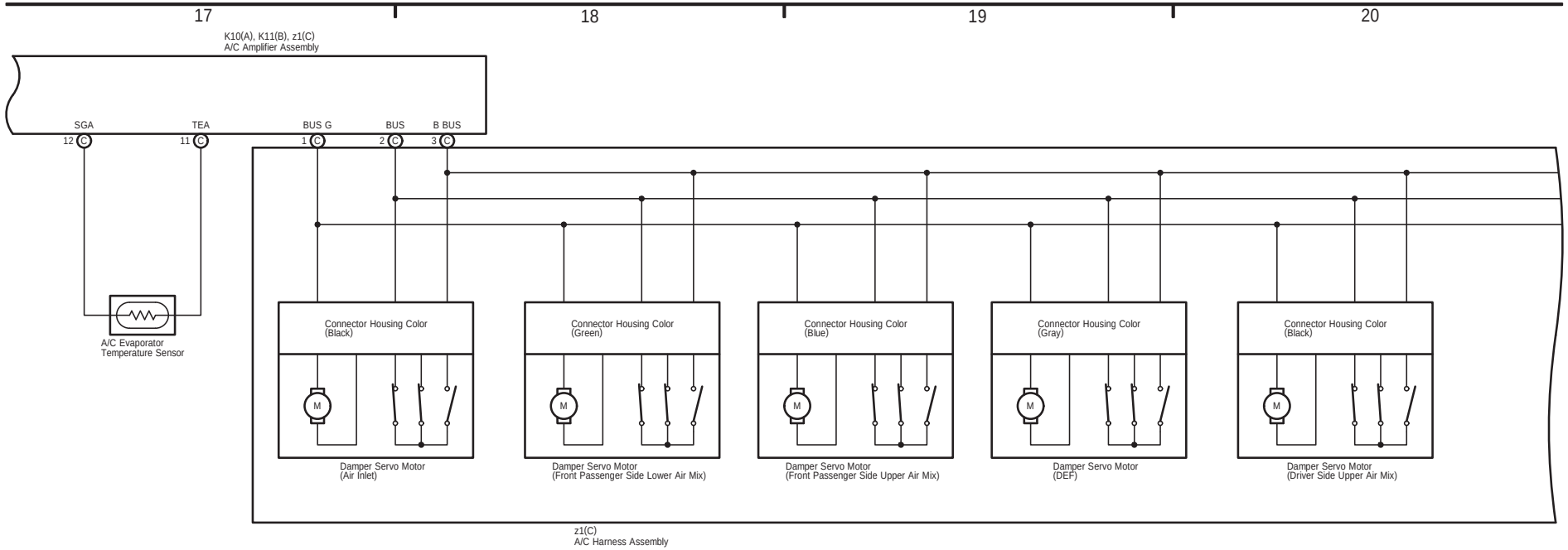

Air Conditioner

* 8 : w/ Stop & Start System
* 9 : w/o Stop & Start System
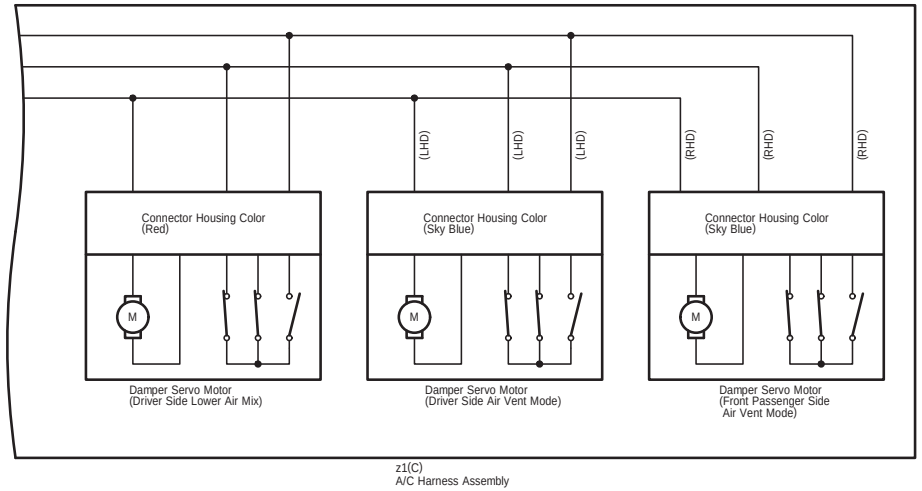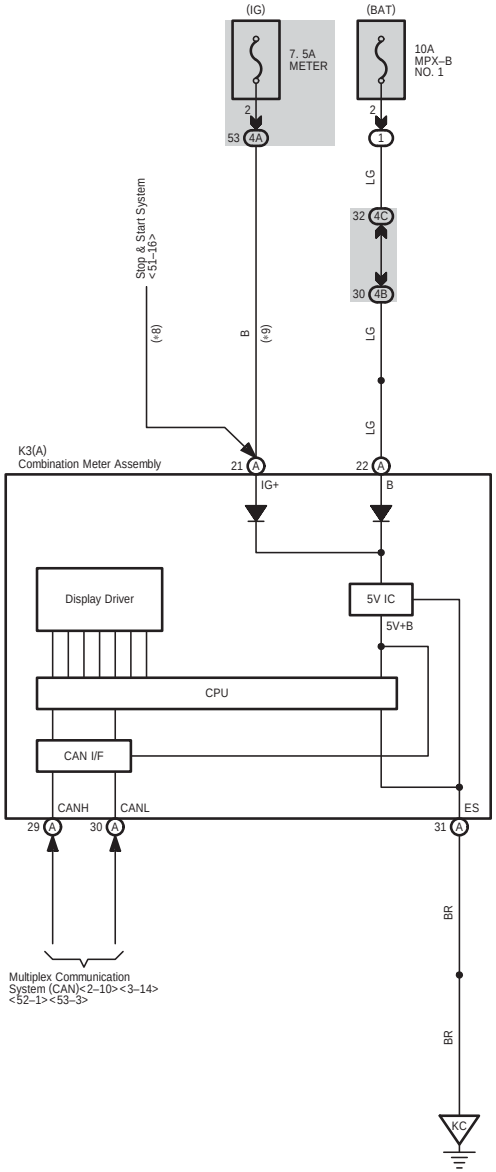
21 22 23 24