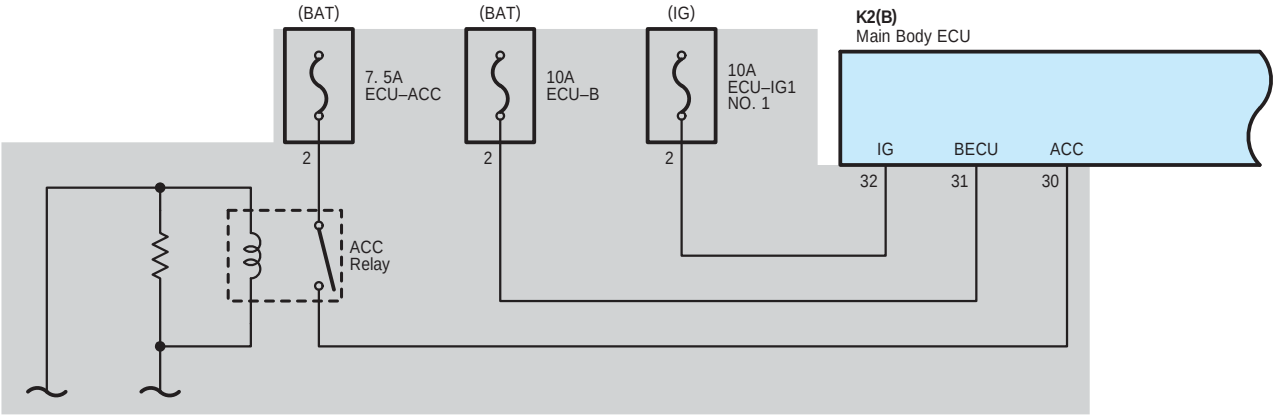

＊1 : w/ Rear Passenger' s Seat Belt Warning

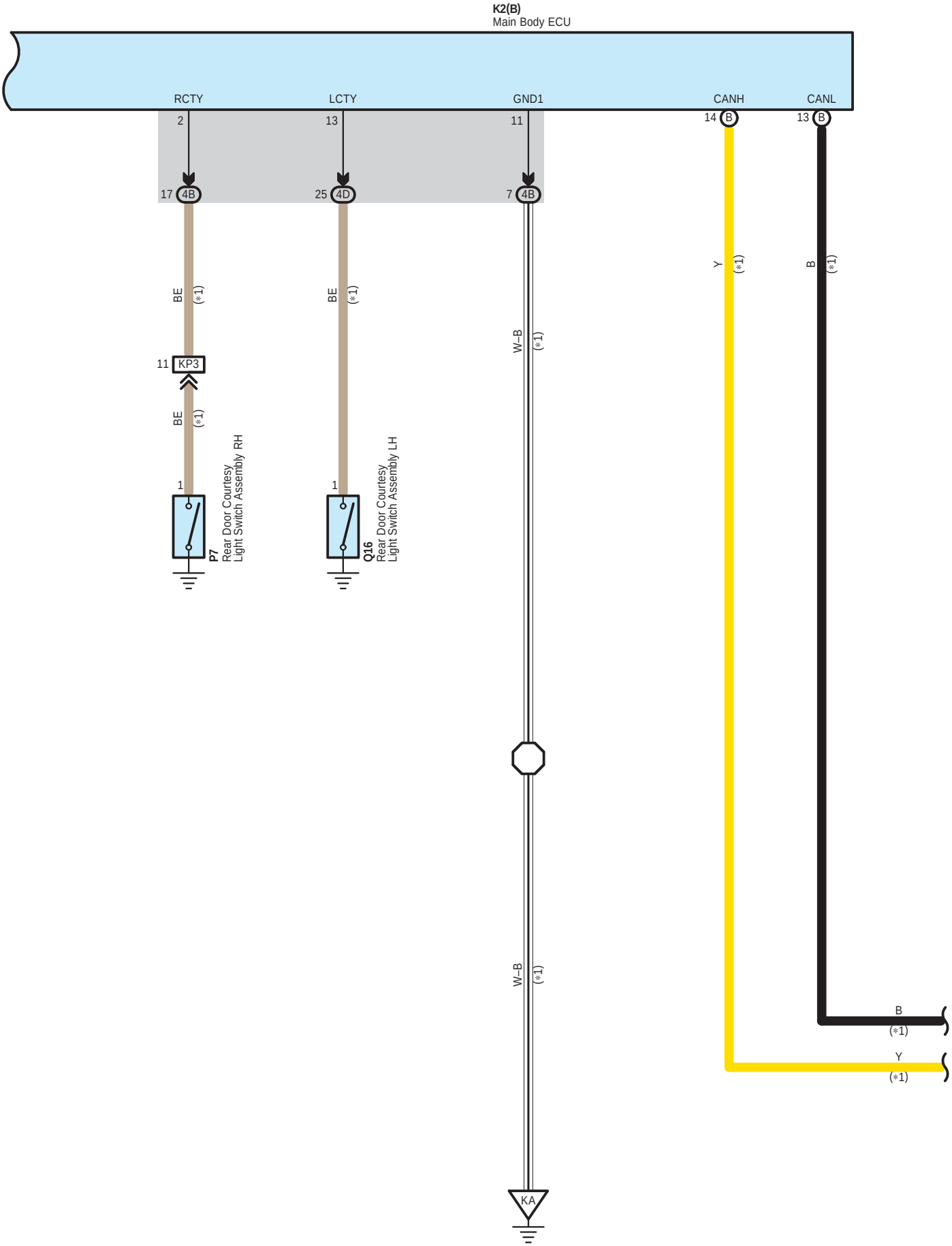
K2(B)
Main Body ECU
RCTY
LCTY
GND1
CANH
CANL
2
13
11
14 B
13 B
17 4B
25 4D
7 4B
BE
(*1)
11 KP3
1
P7
Rear Door Courtesy
Light Switch Assembly RH
Q16
Rear Door Courtesy
Light Switch Assembly LH
W–B
Y
B
KA

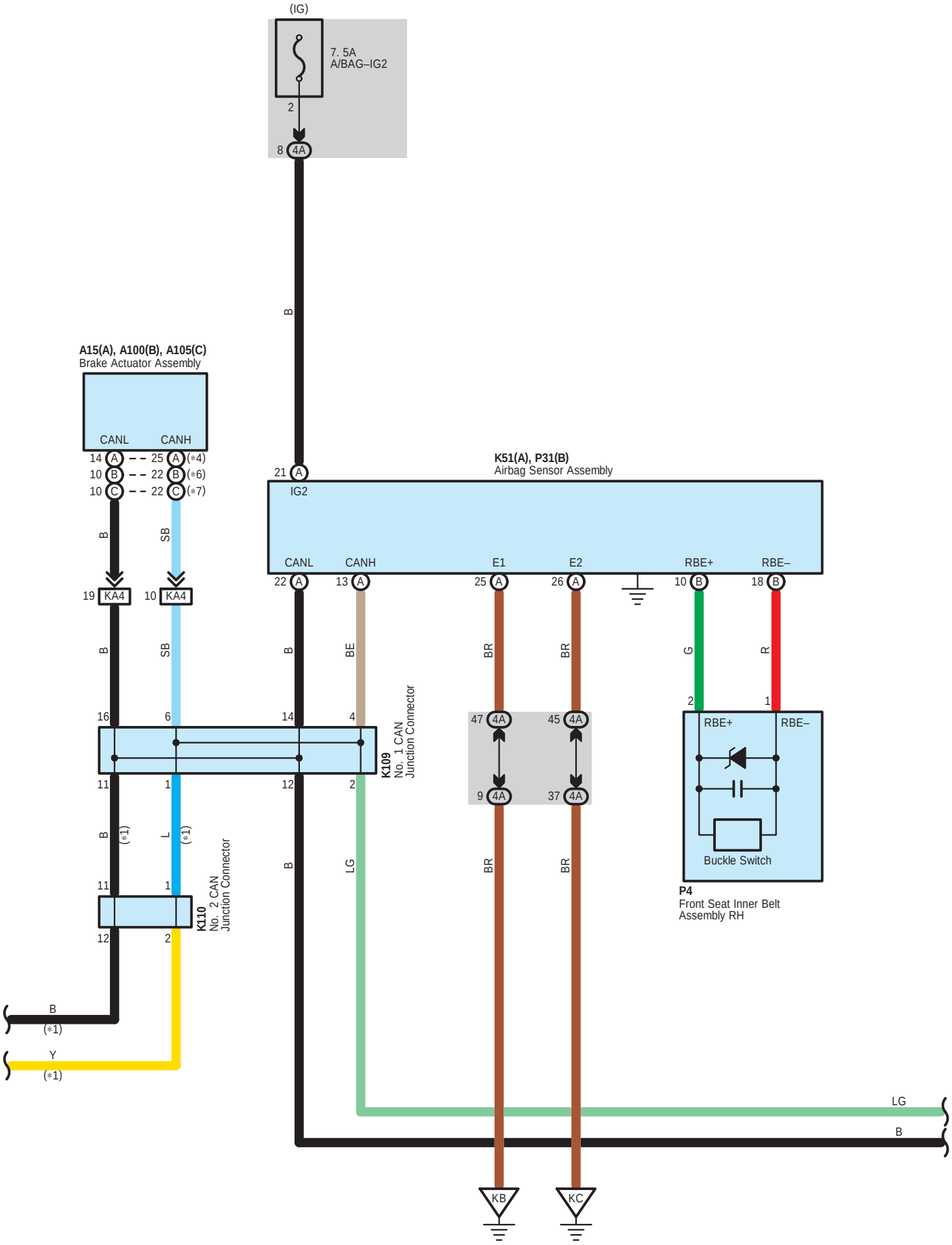
(IG)
7. 5A
A/BAG–IG2
2
8 4A
B
A15(A), A100(B), A105(C)
Brake Actuator Assembly
CANL
CANH
14 A
25 A (*4)
10 B
22 B (*6)
10 C
22 C (*7)
B
SB
19 KA4
10 KA4
B
SB
16
6
11
1
B (*1)
L (*1)
11
1
12
2
K110
No. 2 CAN
Junction Connector
B
(*1)
Y
(*1)
K51(A), P31(B)
Airbag Sensor Assembly
21 A
IG2
CANL
CANH
E1
E2
RBE+
RBE–
22 A
13 A
25 A
26 A
10 B
18 B
B
BE
BR
BR
G
R
14
4
2
1
K109
No. 1 CAN
Junction Connector
47 4A
45 4A
9 4A
37 4A
12
2
B
LG
BR
BR
RBE+
RBE–
Buckle Switch
P4
Front Seat Inner Belt
Assembly RH
LG
B
KB
KC

∗ 1 : w/ Rear Passenger' s Seat Belt Warning
∗ 4 : Before Oct. 2016 Production
∗ 6 : From Oct. 2016 Production
until May 2017 Production
∗ 7 : From May 2017 Production

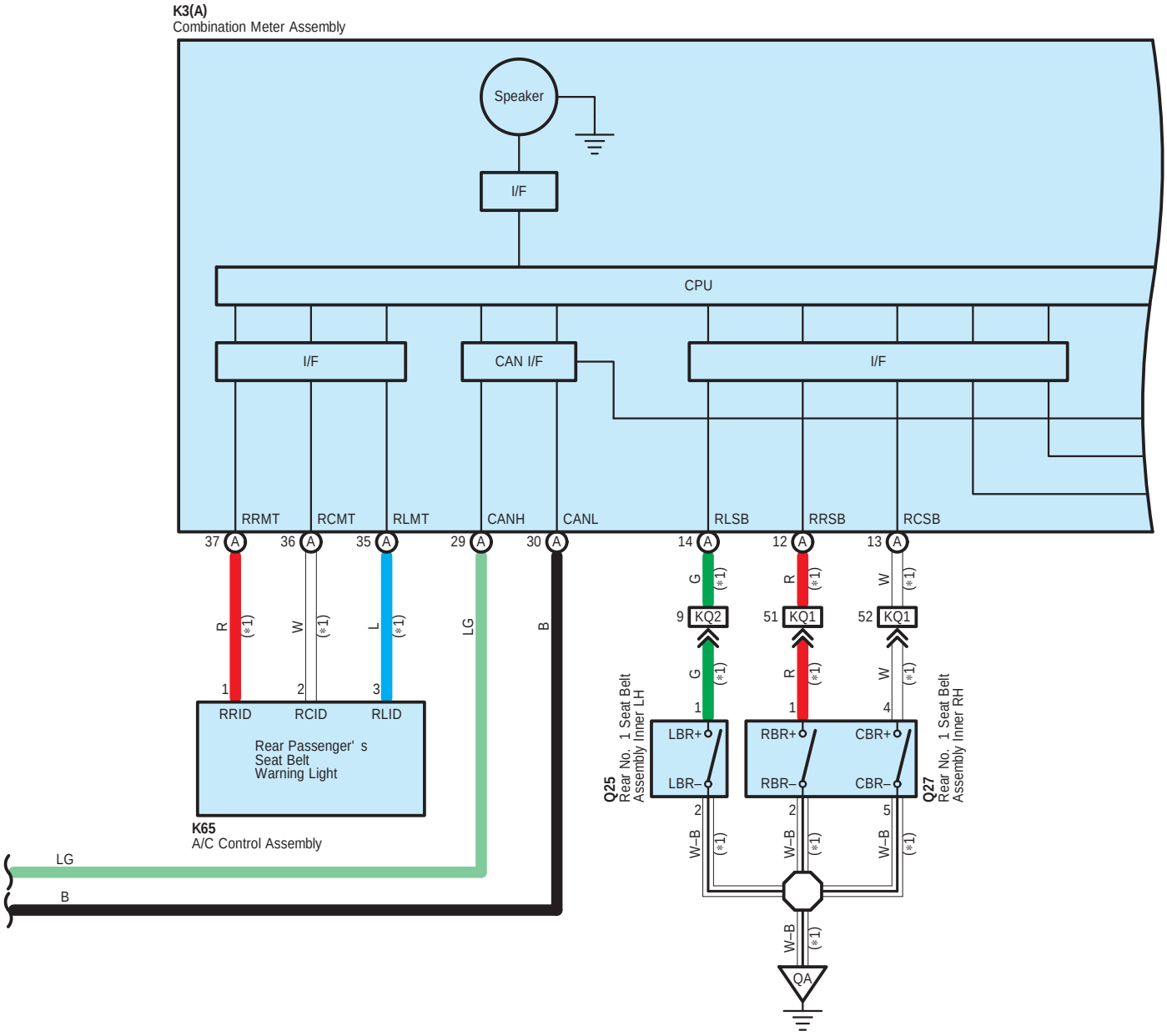

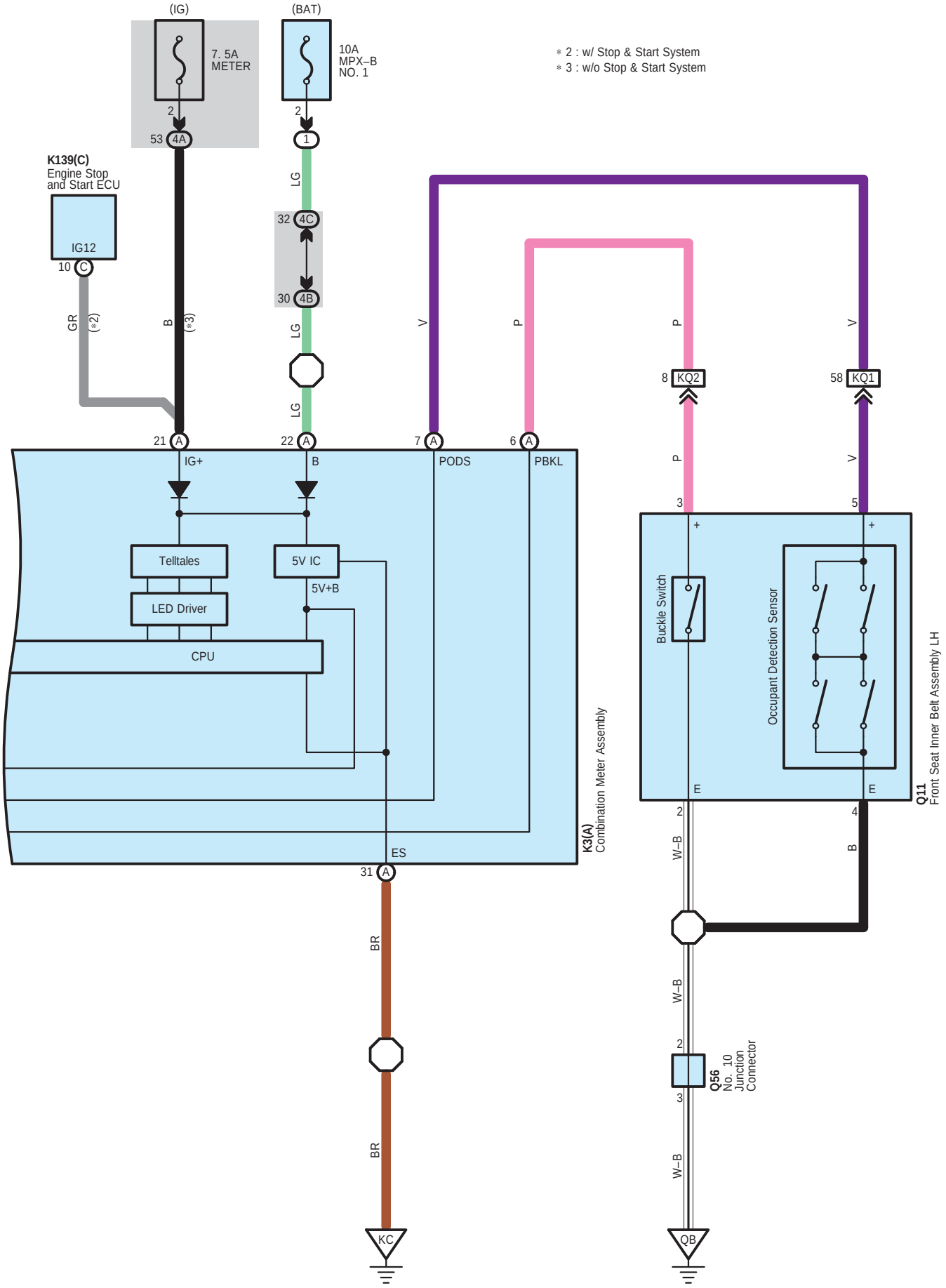
(IG)
7. 5A
METER
(BAT)
10A
MPX–B
NO. 1
∗ 2 : w/ Stop & Start System
∗ 3 : w/o Stop & Start System
K139(C)
Engine Stop
and Start ECU
IG12
GR
(∗2)
B
(∗3)
LG
V
P
KQ2
KQ1
IG+
PODS
PBKL
Telltales
5V IC
5V+B
LED Driver
CPU
ES
K3(A)
Combination Meter Assembly
Buckle Switch
Occupant Detection Sensor
Q11
Front Seat Inner Belt Assembly LH
W–B
BR
Q56
No. 10
Junction
Connector
KC
QB

A15
Black

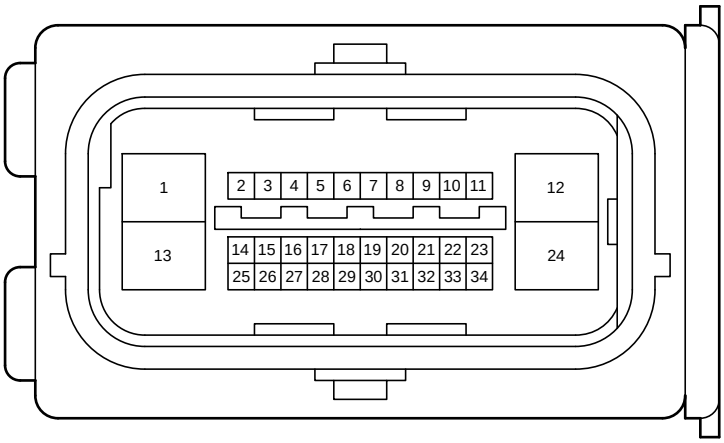

90980-12686

A100
Black

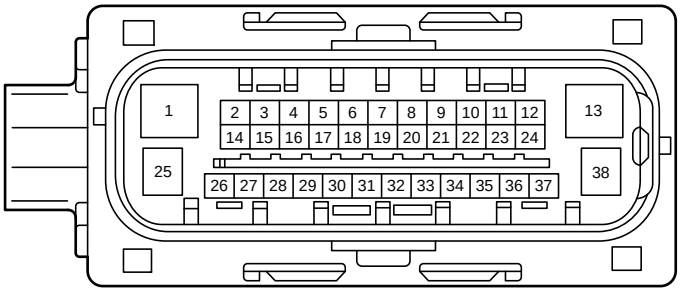

90980-12A95

A105
Black

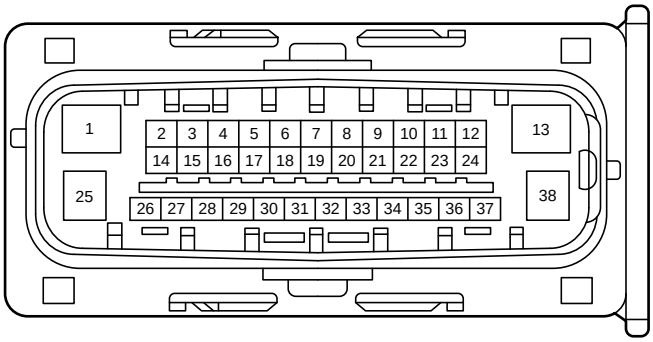

90980-12B01

K2
White

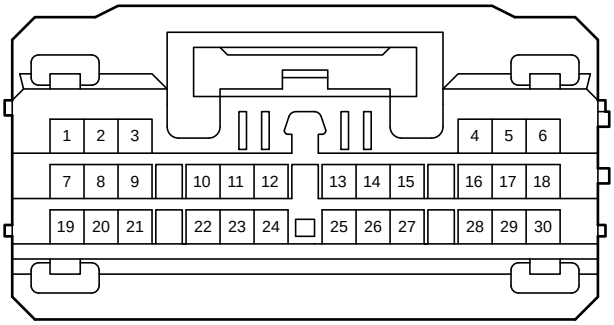

90980-12909

K3
Black

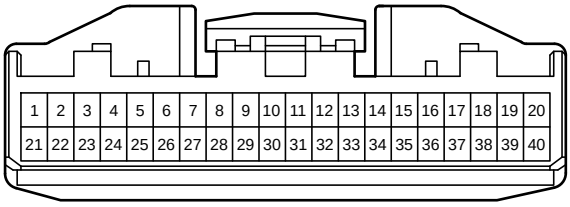

90980-12557

K51
Yellow

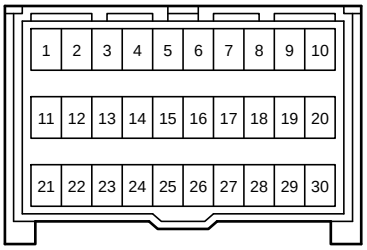

90980-12391

K65
Black

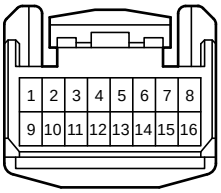

90980-12553

K109
White

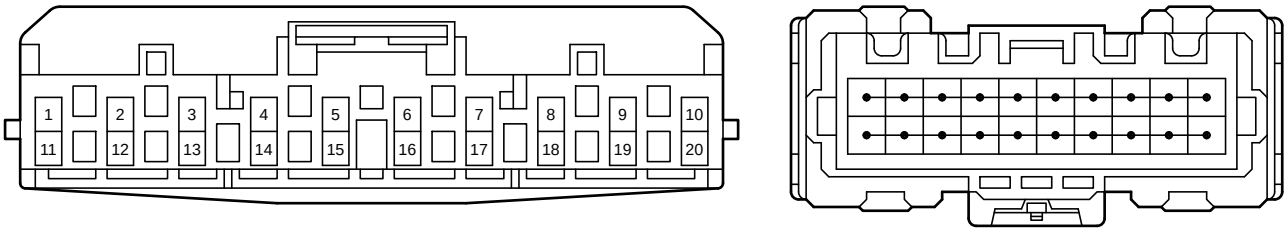

90980-12A58

K110
White

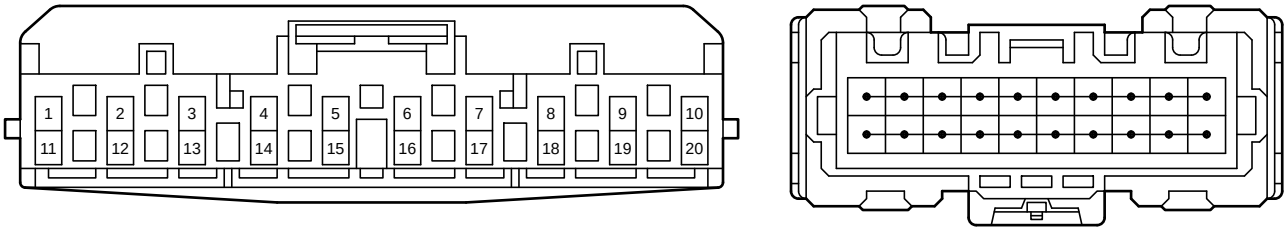

90980-12A58

K139
Black

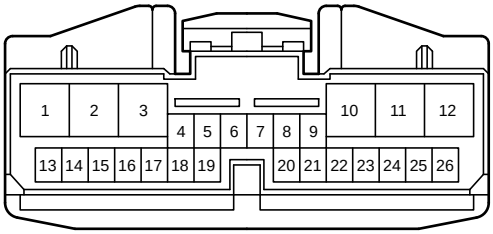

82824-12510

P4
Gray

90980-10942

P7
White

90980-10871

P31
Yellow

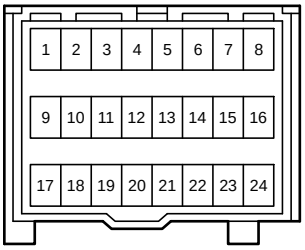

90980-12392

Q11
White

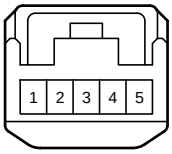

90980-12366

Q16
White

90980-10871

Q25
Black

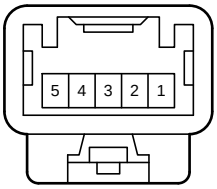

90980-12365

Q27
Gray

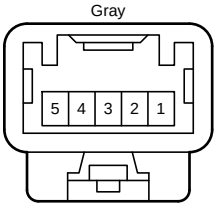

90980-12365

Q56
Black

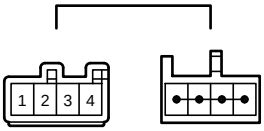

90980-11398

4A
White

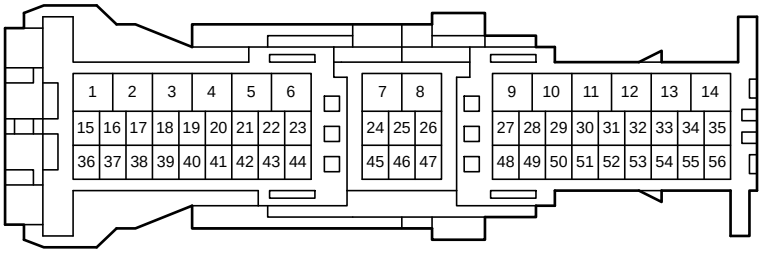

90980-12943

4B
White

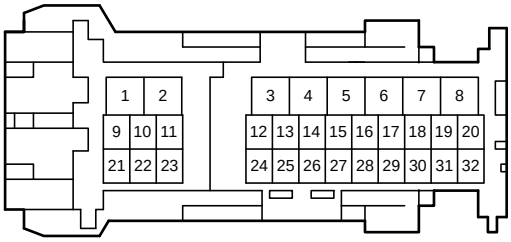

90980-12A48

4C
White

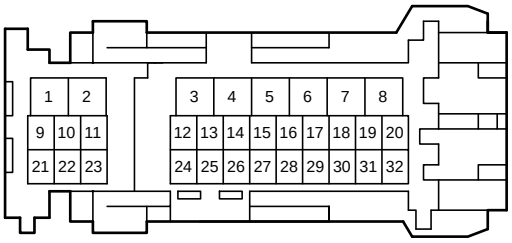

90980-12A47

4D
White

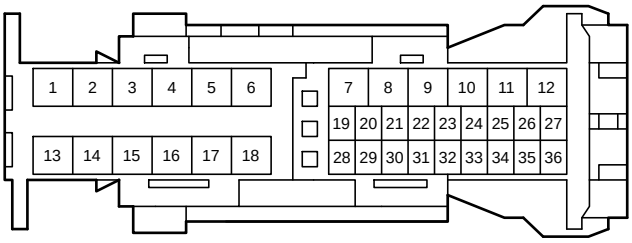

90980-12944

KA4
White

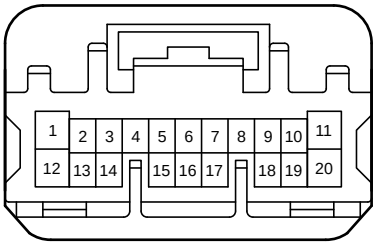

90980-12741

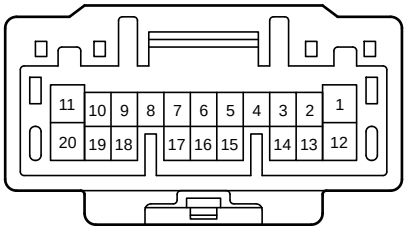

90980-12740

KP3
White

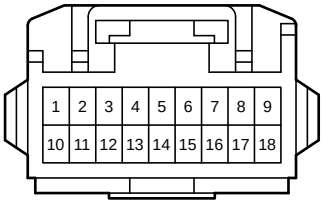

82824-53070

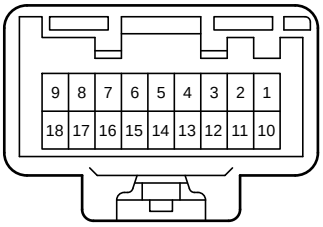

82824-53060

KQ1
White

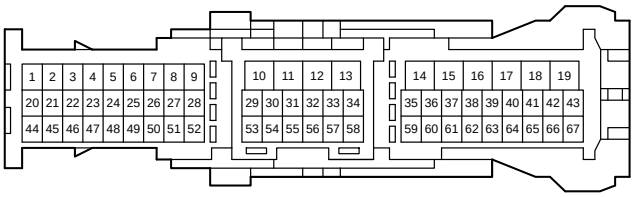

90980-12783

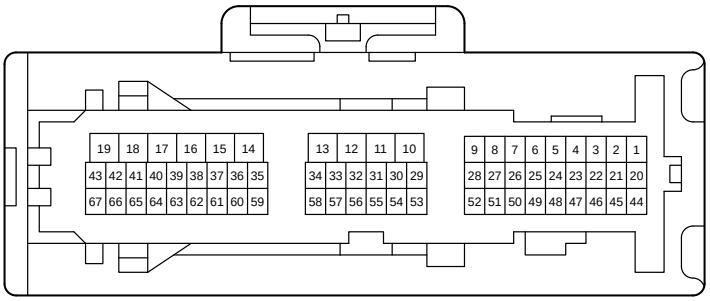

90980-12800

KQ2
White

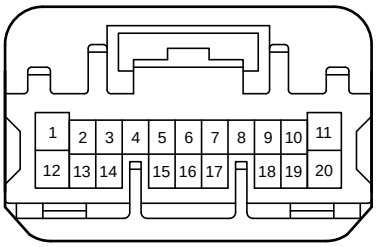

90980-12741

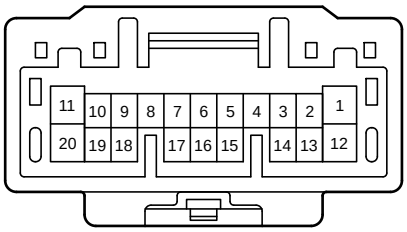

90980-12740