(Cont. next page)

Multiplex Communication System (CAN RHD) (Before Oct. 2016 Production)

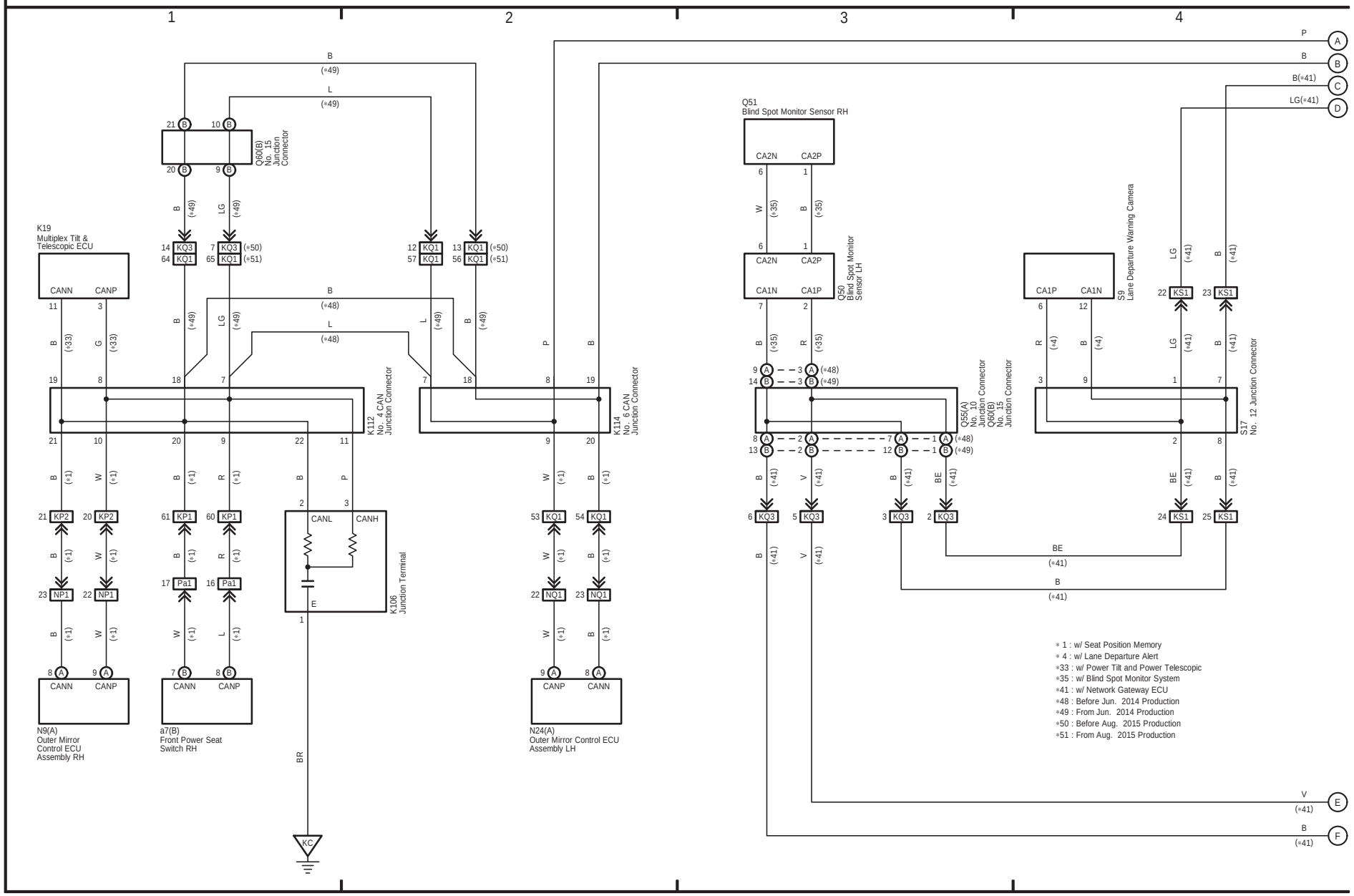

(Cont. next page)

Multiplex Communication System (CAN RHD)
(Before Oct. 2016 Production)

*36 : w/ Dynamic Radar Cruise Control
*38 : w/ LEXUS Parking Assist–Sensor System
*39 : w/ Adaptive Variable Suspension
*41 : w/ Network Gateway ECU

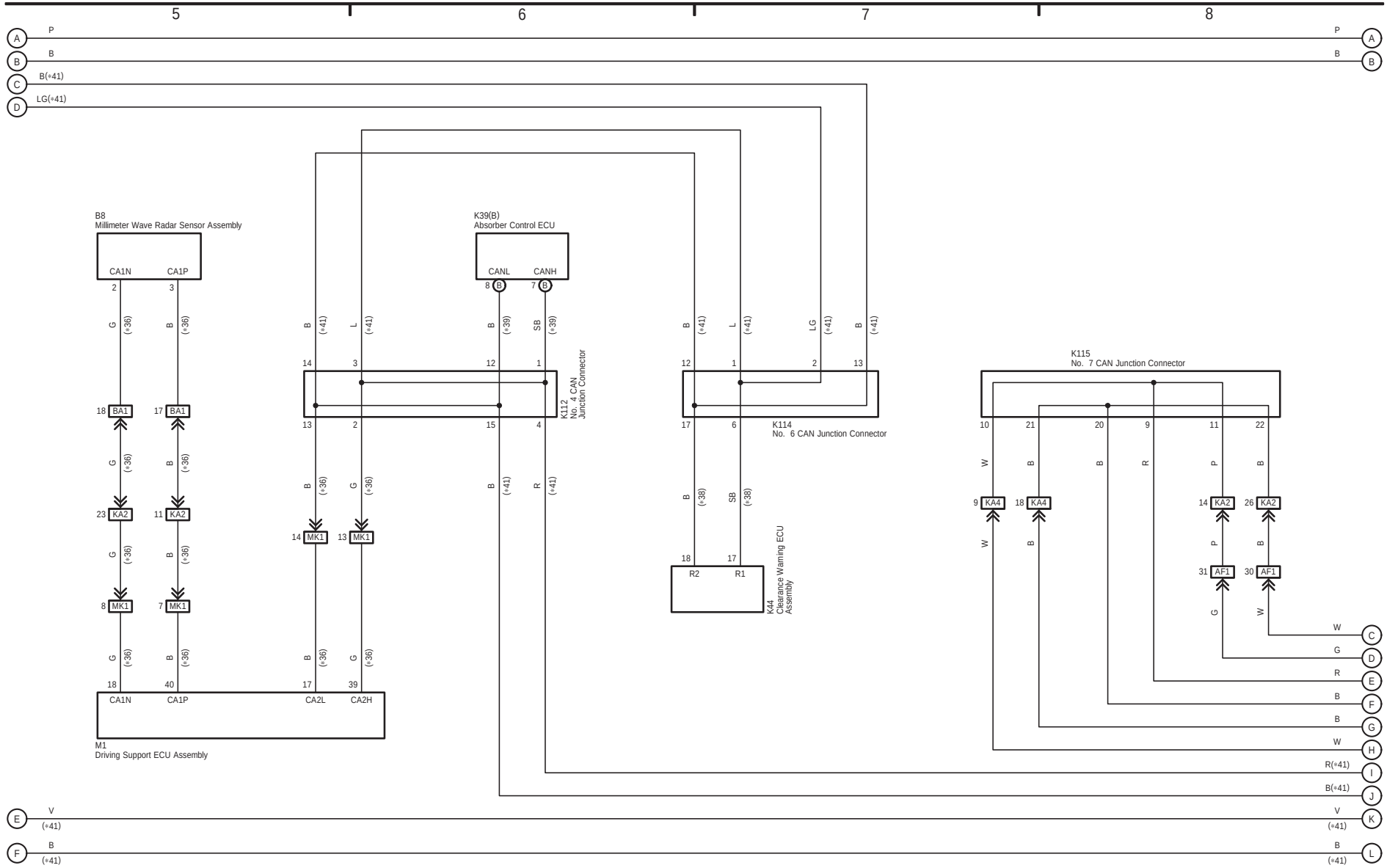

(Cont. next page)

Multiplex Communication System (CAN RHD) (Before Oct. 2016 Production)

*41 : w/ Network Gateway ECU
*47 : w/ ASC
*50 : Before Aug. 2015 Production
*51 : From Aug. 2015 Production

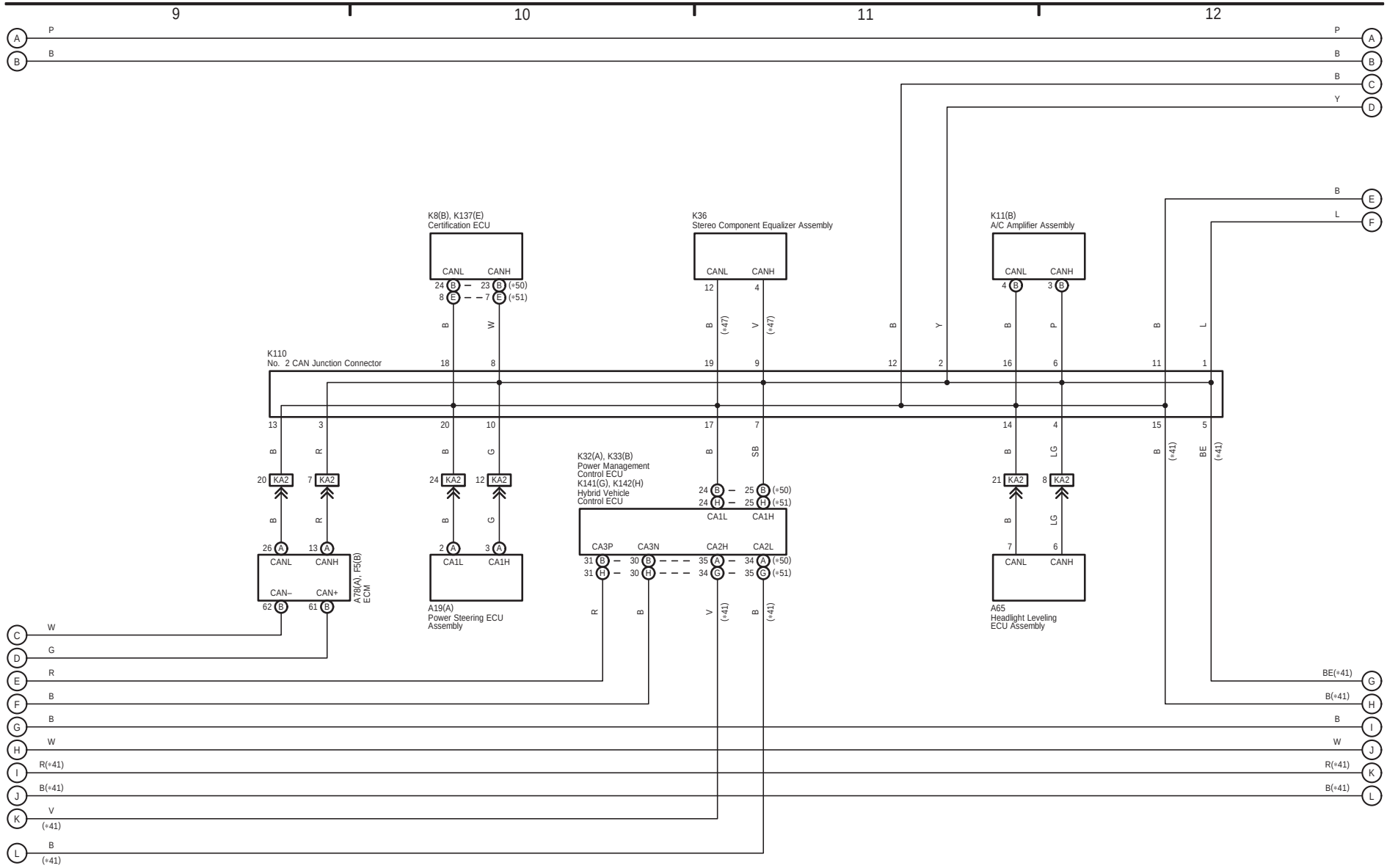

(Cont. next page)

*31 : w/ LEXUS Navigation System
*32 : w/o LEXUS Navigation System
*41 : w/ Network Gateway ECU
*48 : Before Jun. 2014 Production
*49 : From Jun. 2014 Production

Multiplex Communication System (CAN RHD) (Before Oct. 2016 Production)

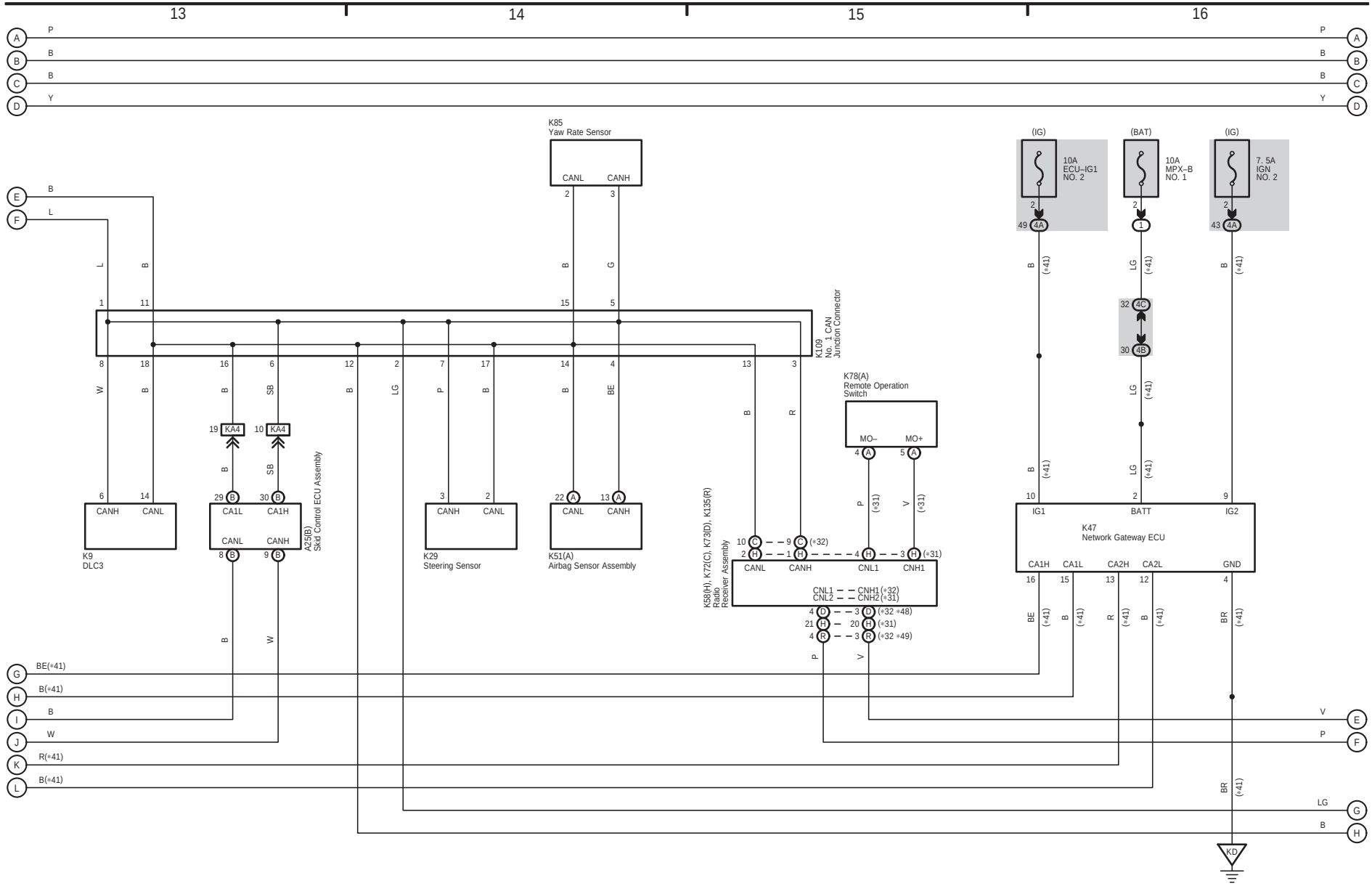

(Cont. next page)

Automatic Light Control (RHD) (Before Oct. 2016 Production),
Light Auto Turn Off system (RHD) (Before Oct. 2016 Production)

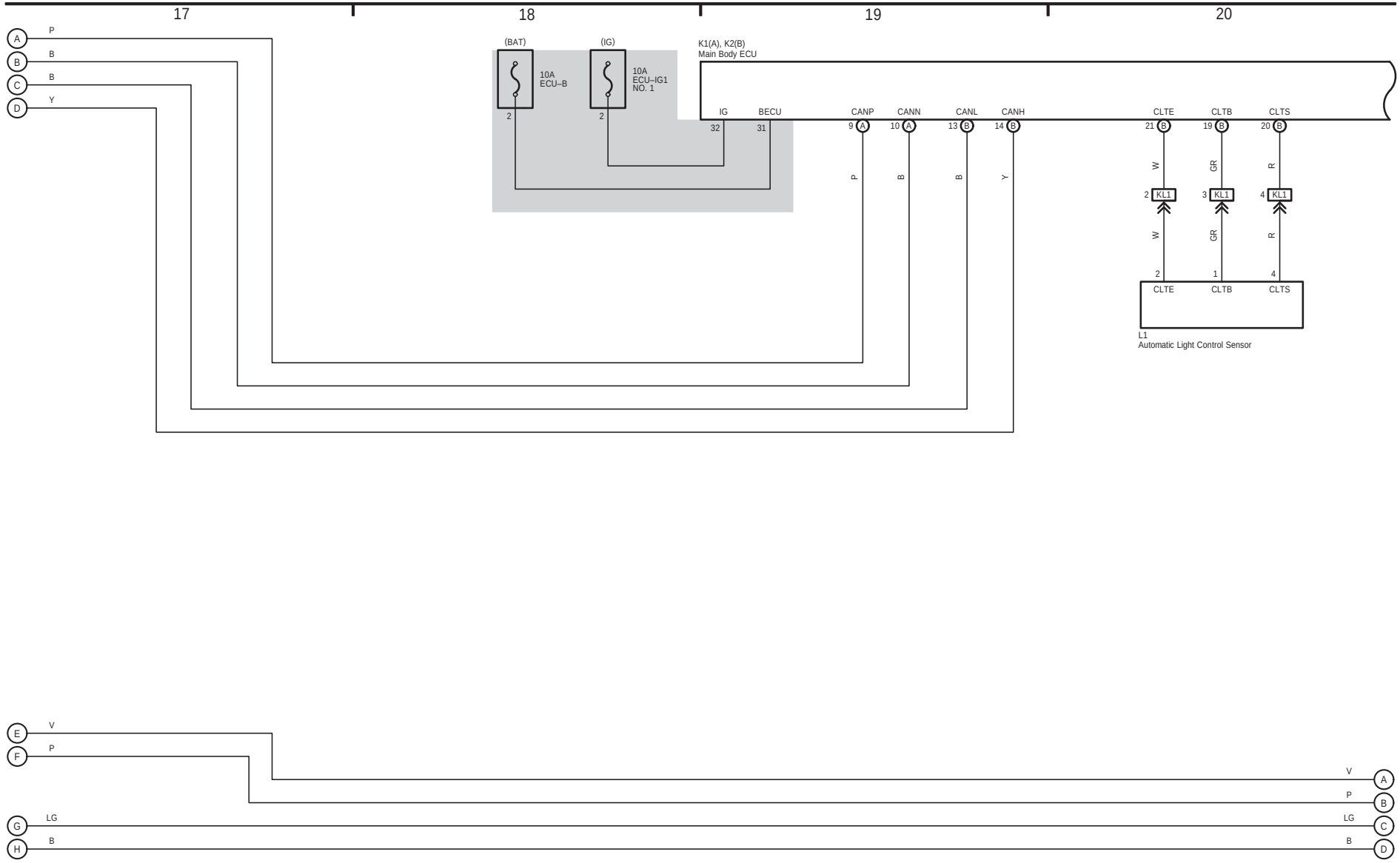

(Cont. next page)

Automatic Light Control (RHD) (Before Oct. 2016 Production),
Light Auto Turn Off system (RHD) (Before Oct. 2016 Production)

Headlight (RHD)
(Before Oct. 2016 Production)

21 22 23 24

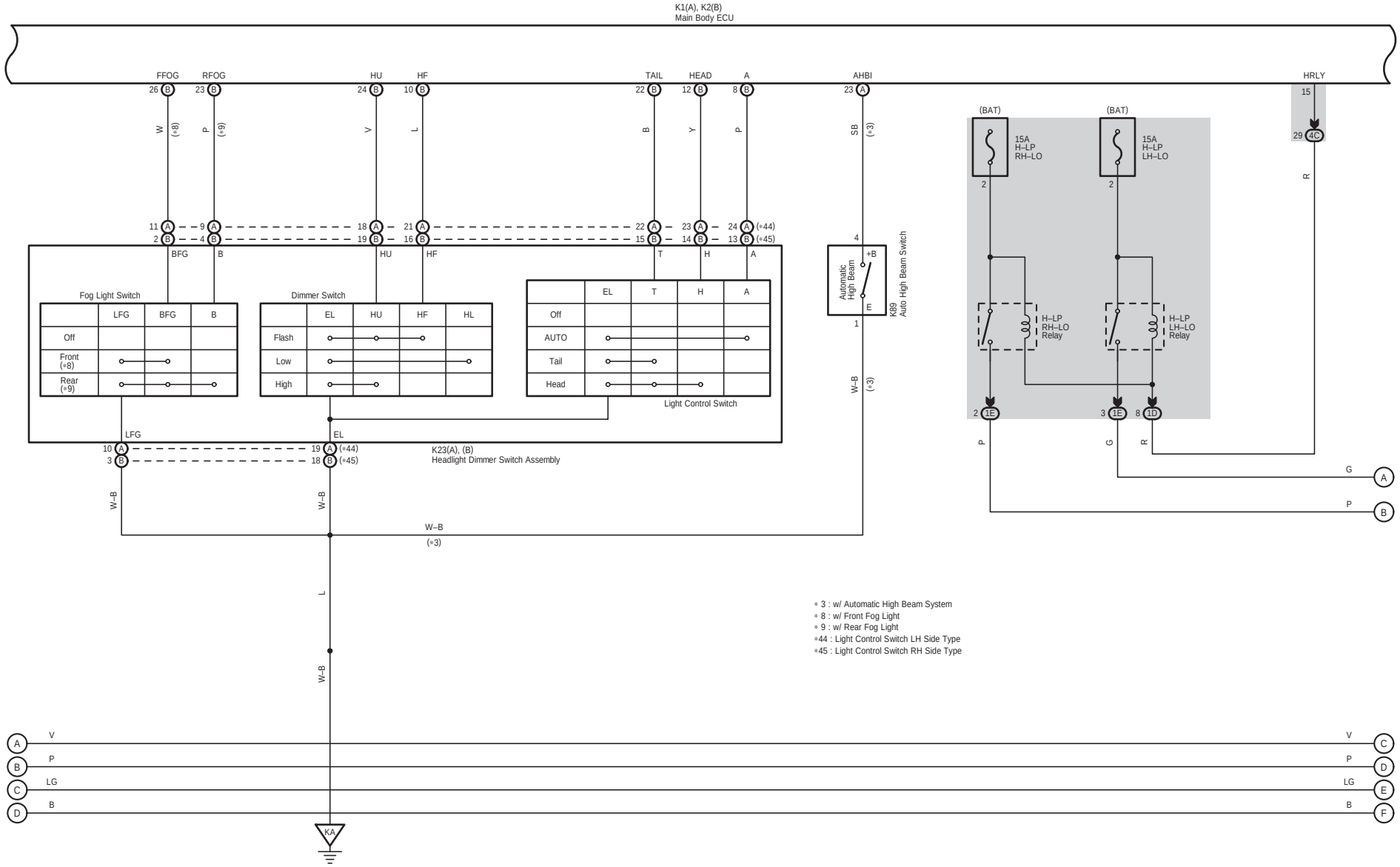

(Cont. next page)

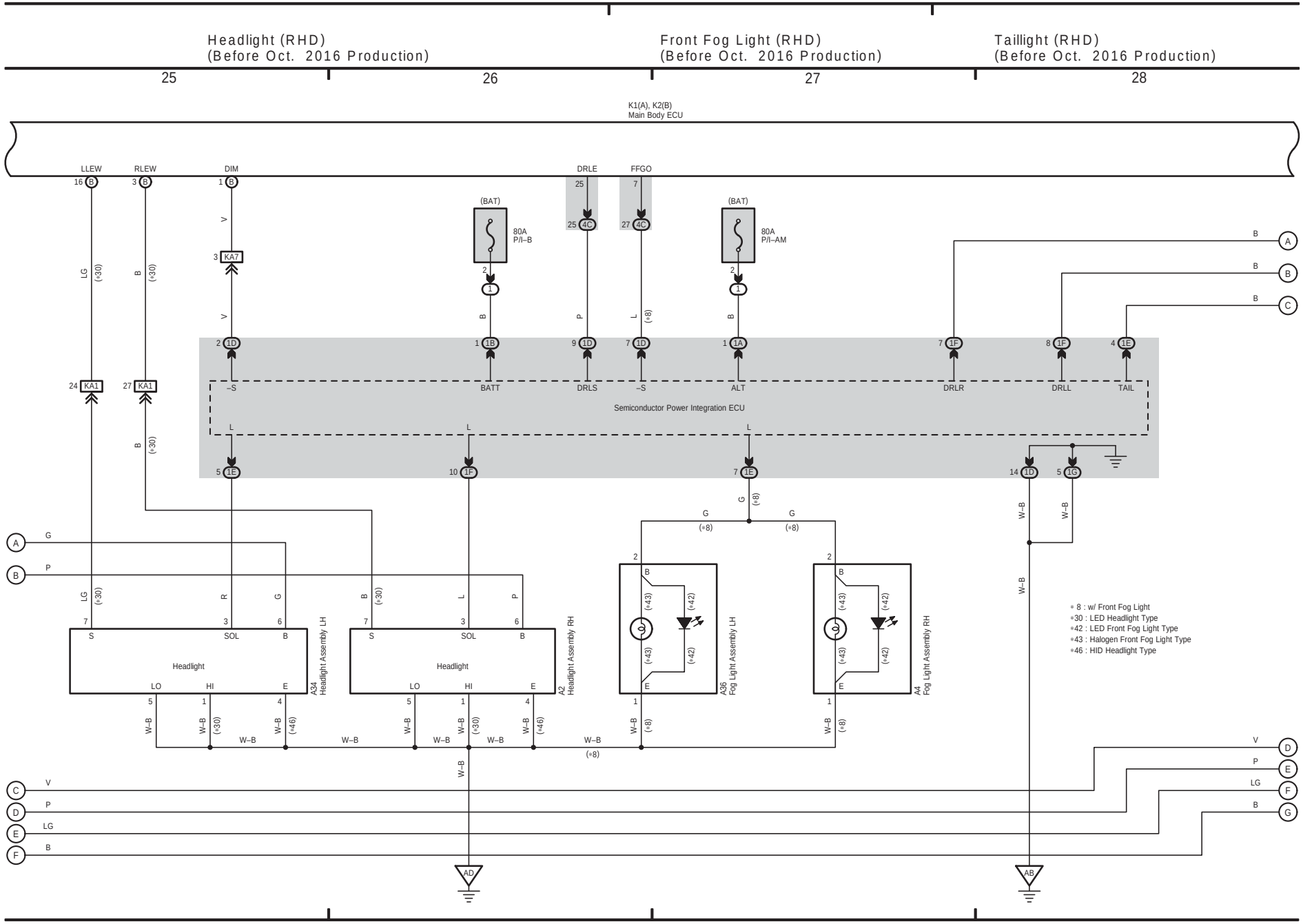

(Cont. next page)

Taillight (RHD) (Before Oct. 2016 Production)

* 9 : w/ Rear Fog Light

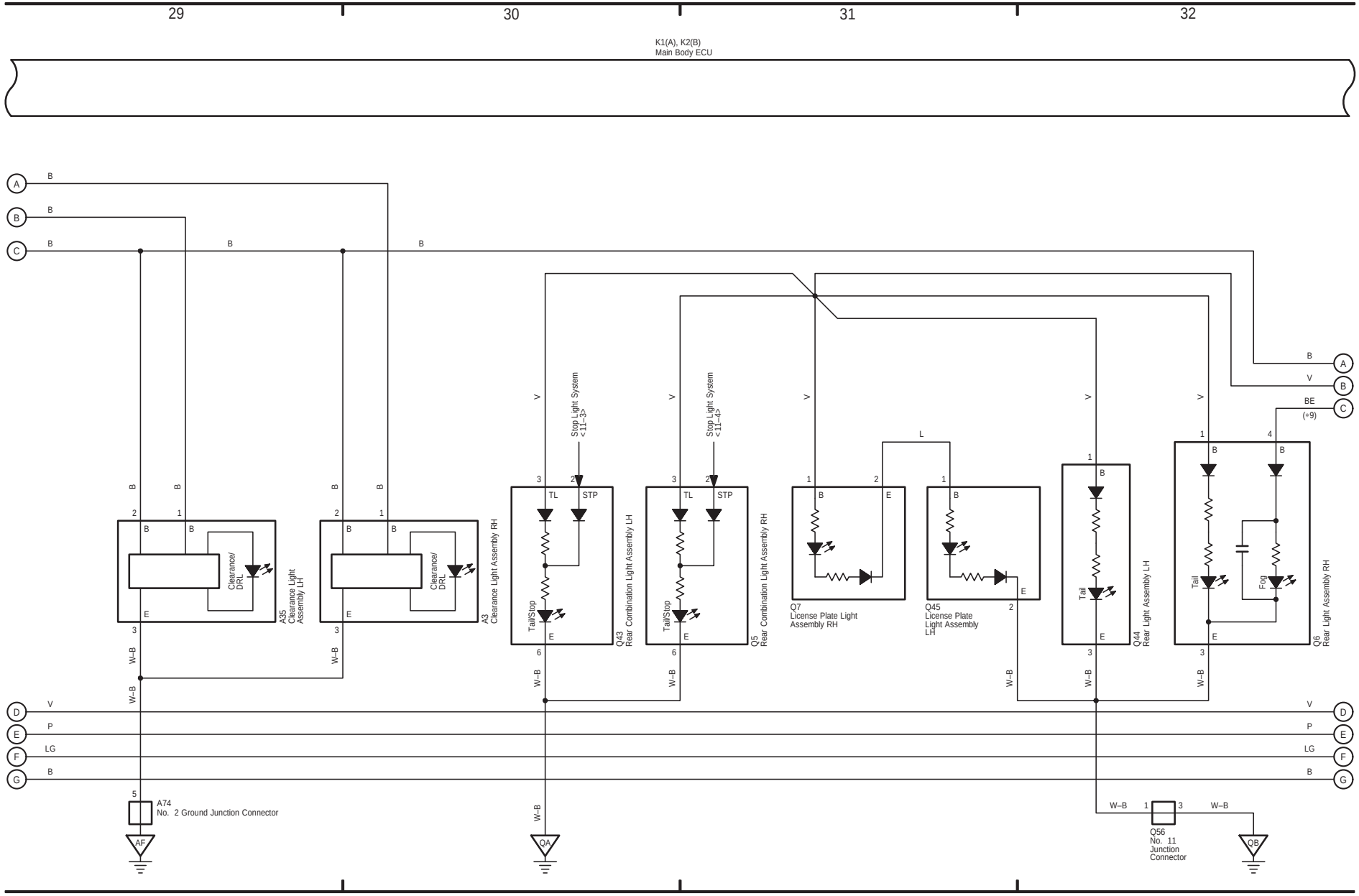

(Cont. next page)

Rear Fog Light (RHD) (Before Oct. 2016 Production)

Illumination (RHD) (Before Oct. 2016 Production)

33 34 35 36

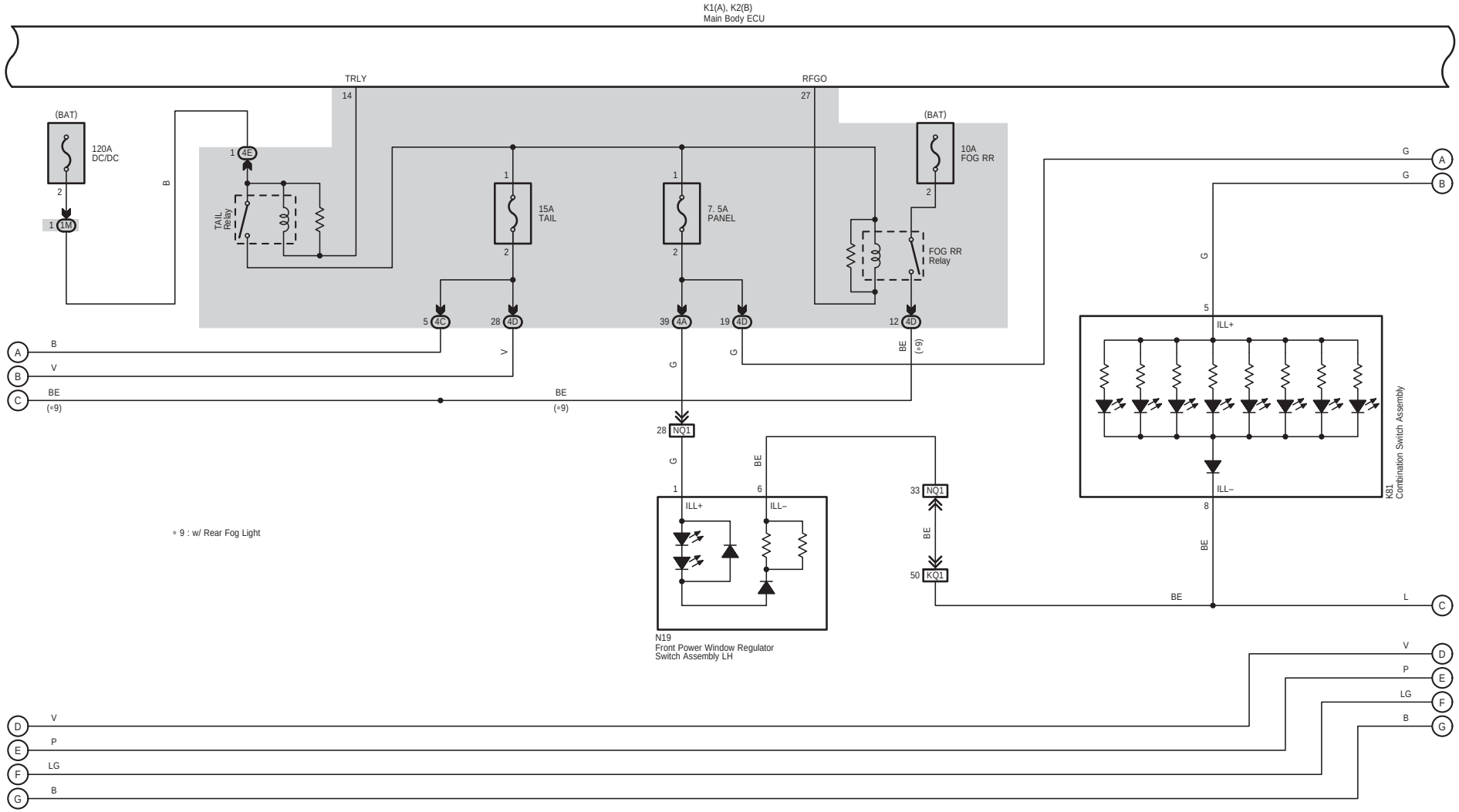

* 9 : w/ Rear Fog Light

(Cont. next page)

Illumination (RHD) (Before Oct. 2016 Production)

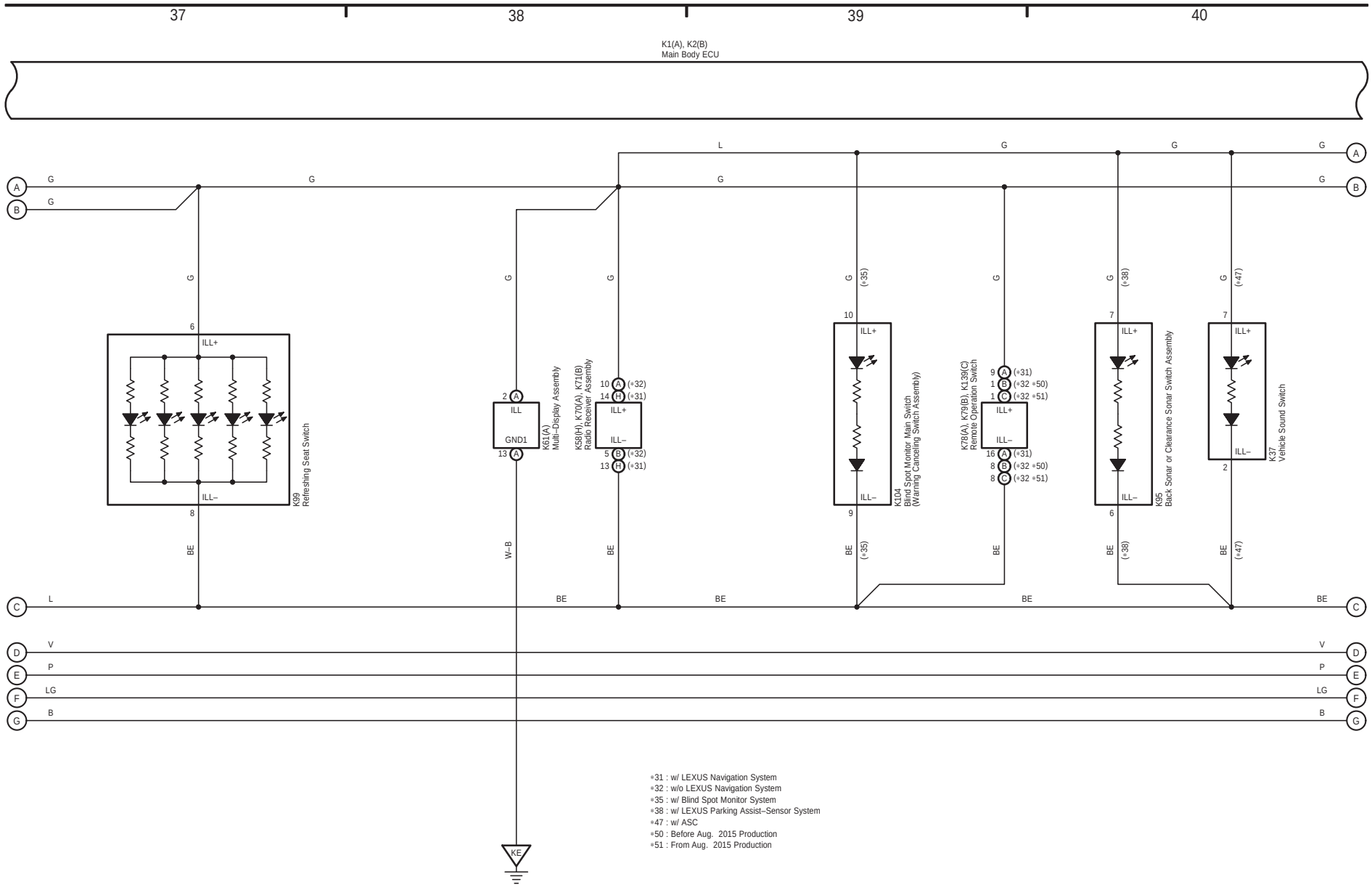

(Cont. next page)

Illumination (RHD) (Before Oct. 2016 Production)

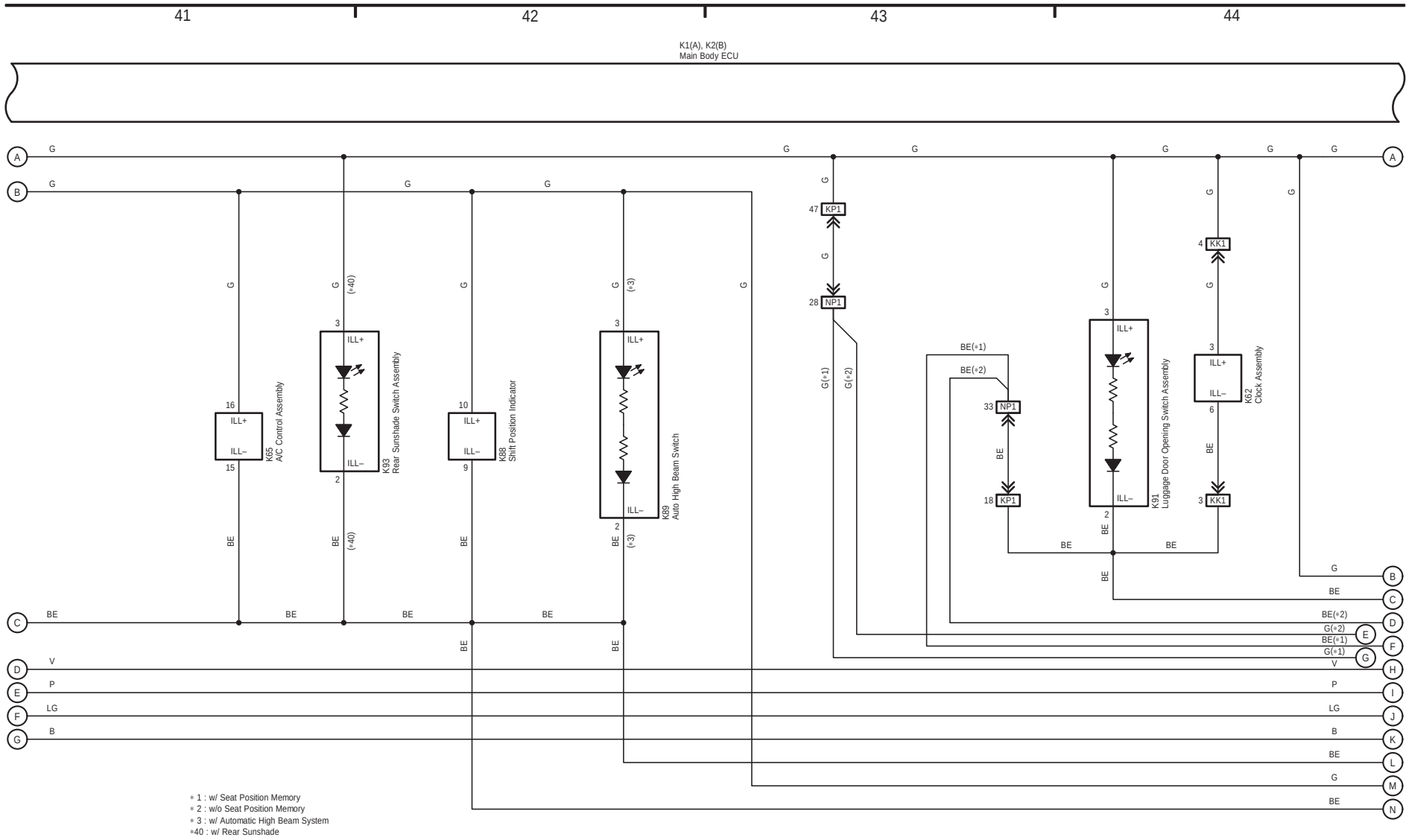

(Cont. next page)

Illumination (RHD) (Before Oct. 2016 Production)

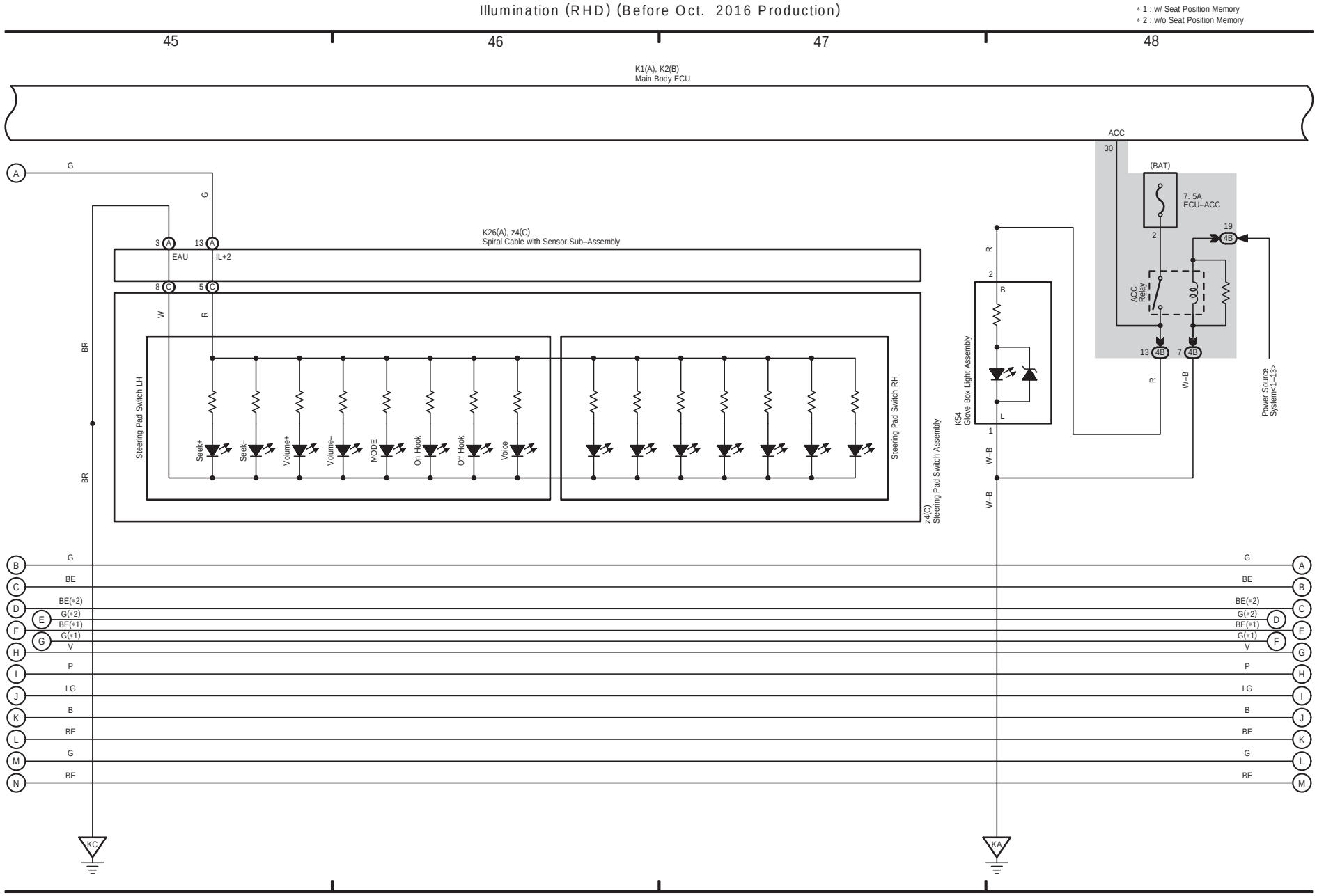

(Cont. next page)

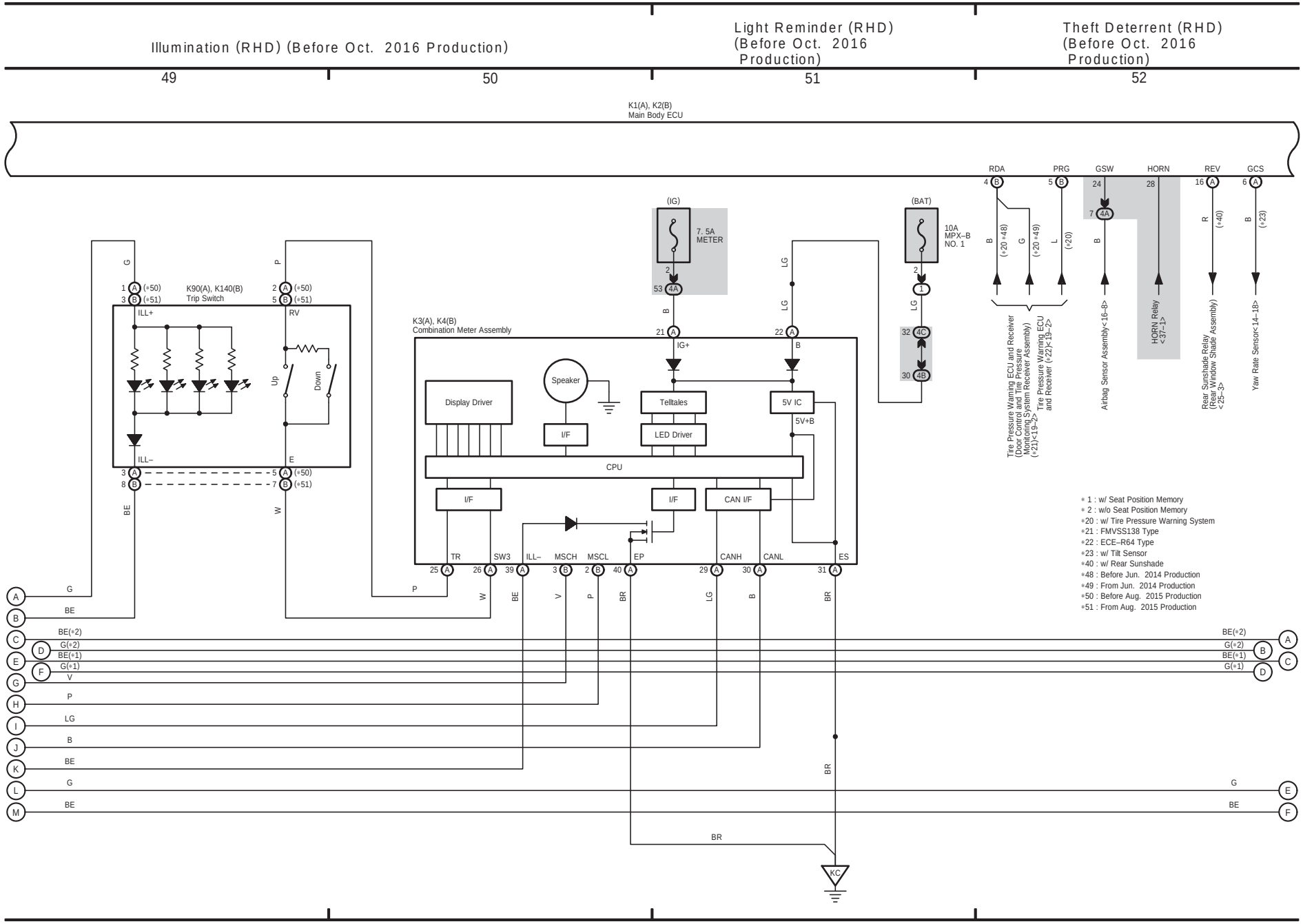

(Cont. next page)

Theft Deterrent (RHD) (Before Oct. 2016 Production)

Luggage Compartment Door Opener (RHD) (Before Oct. 2016 Production)

53 54 55 56

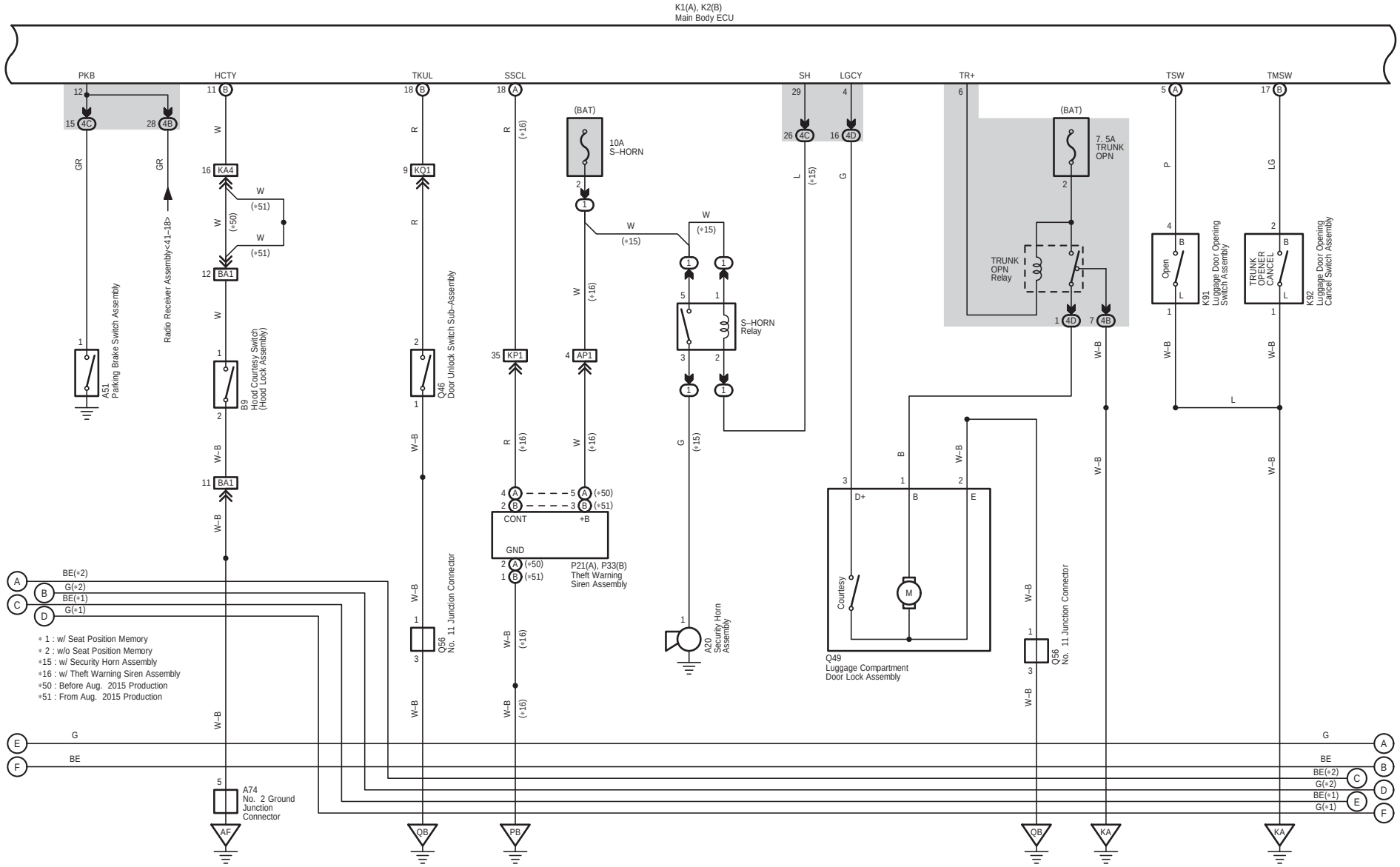

(Cont. next page)

Interior Light (RHD) (Before Oct. 2016 Production)

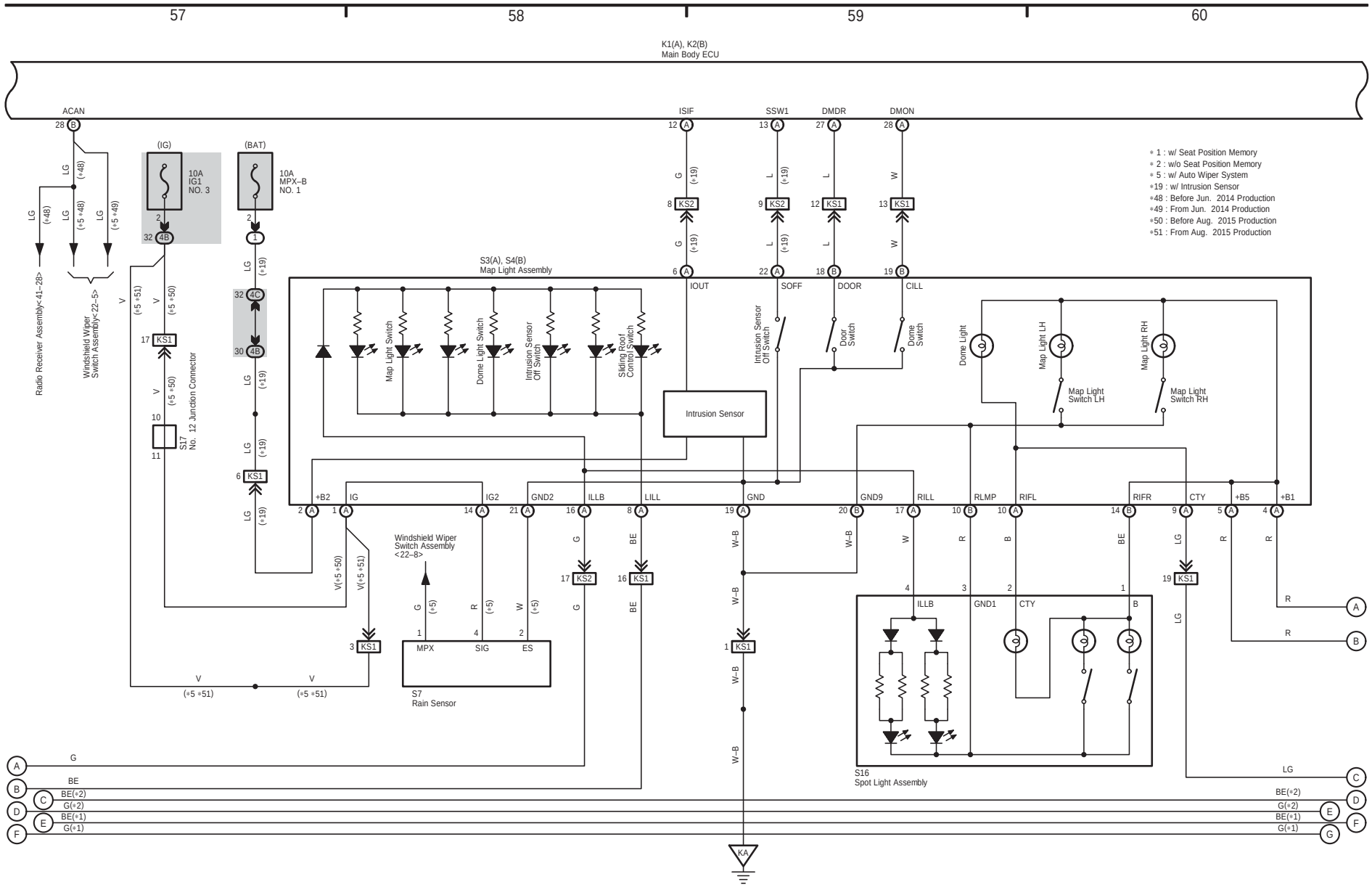

(Cont. next page)

Interior Light (RHD) (Before Oct. 2016 Production)

* 1 : w/ Seat Position Memory
* 2 : w/o Seat Position Memory

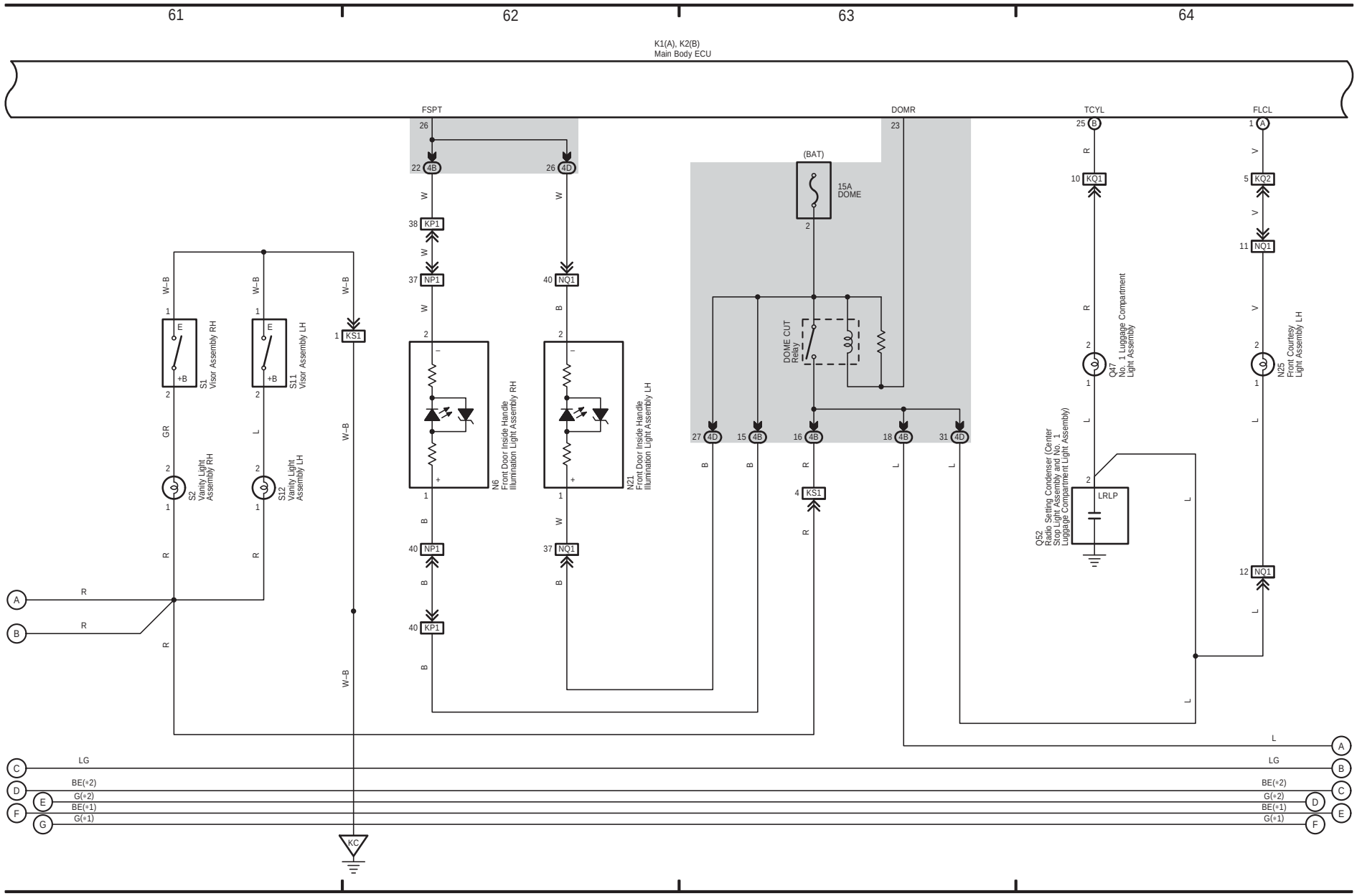

(Cont. next page)

Interior Light (RHD) (Before Oct. 2016 Production)

* 1 : w/ Seat Position Memory
* 2 : w/o Seat Position Memory
*34 : w/ Sliding Roof

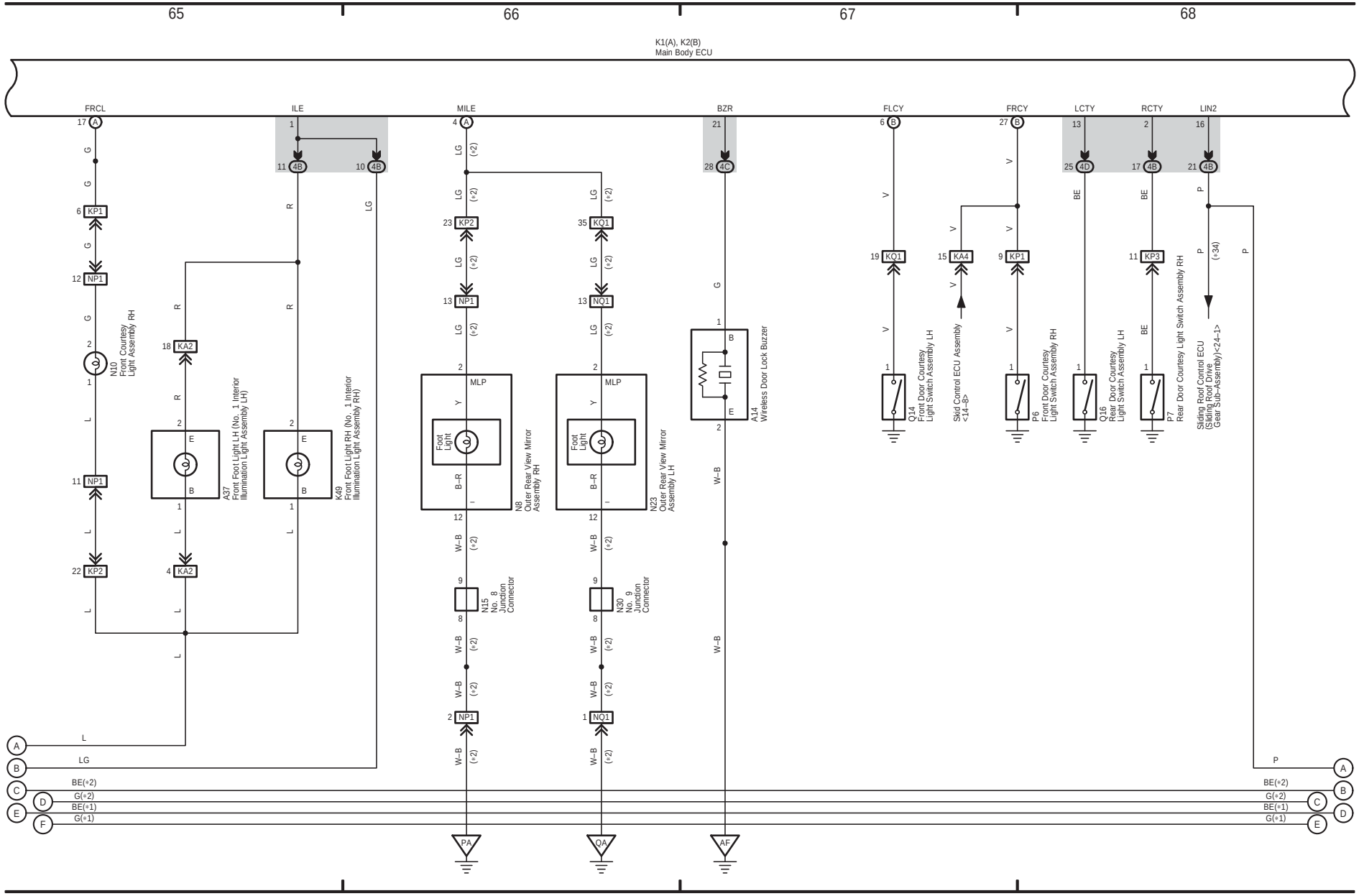

(Cont. next page)

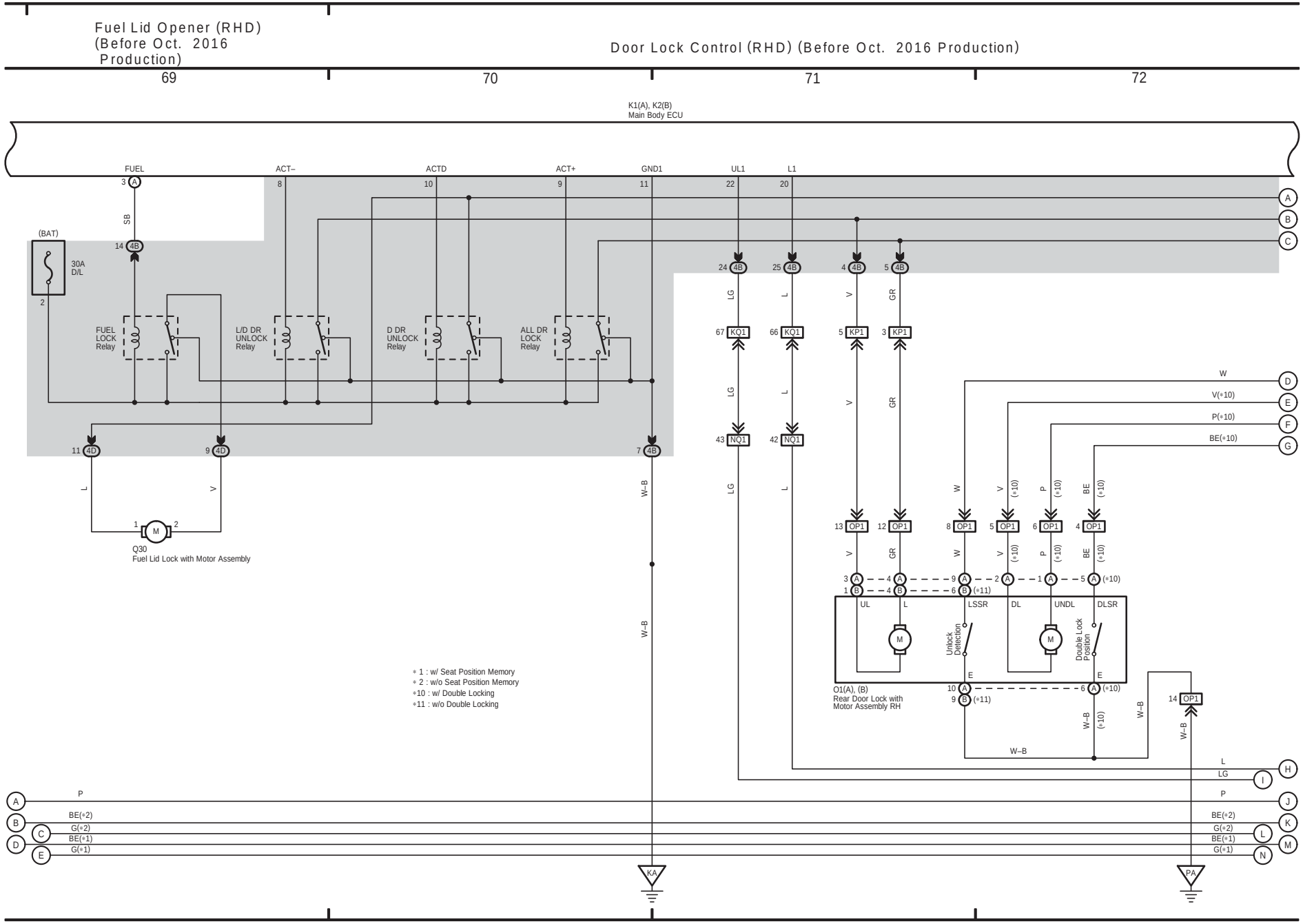

(Cont. next page)

Door Lock Control (RHD) (Before Oct. 2016 Production)

∗ 1 : w/ Seat Position Memory
∗ 2 : w/o Seat Position Memory
∗10 : w/ Double Locking
∗11 : w/o Double Locking

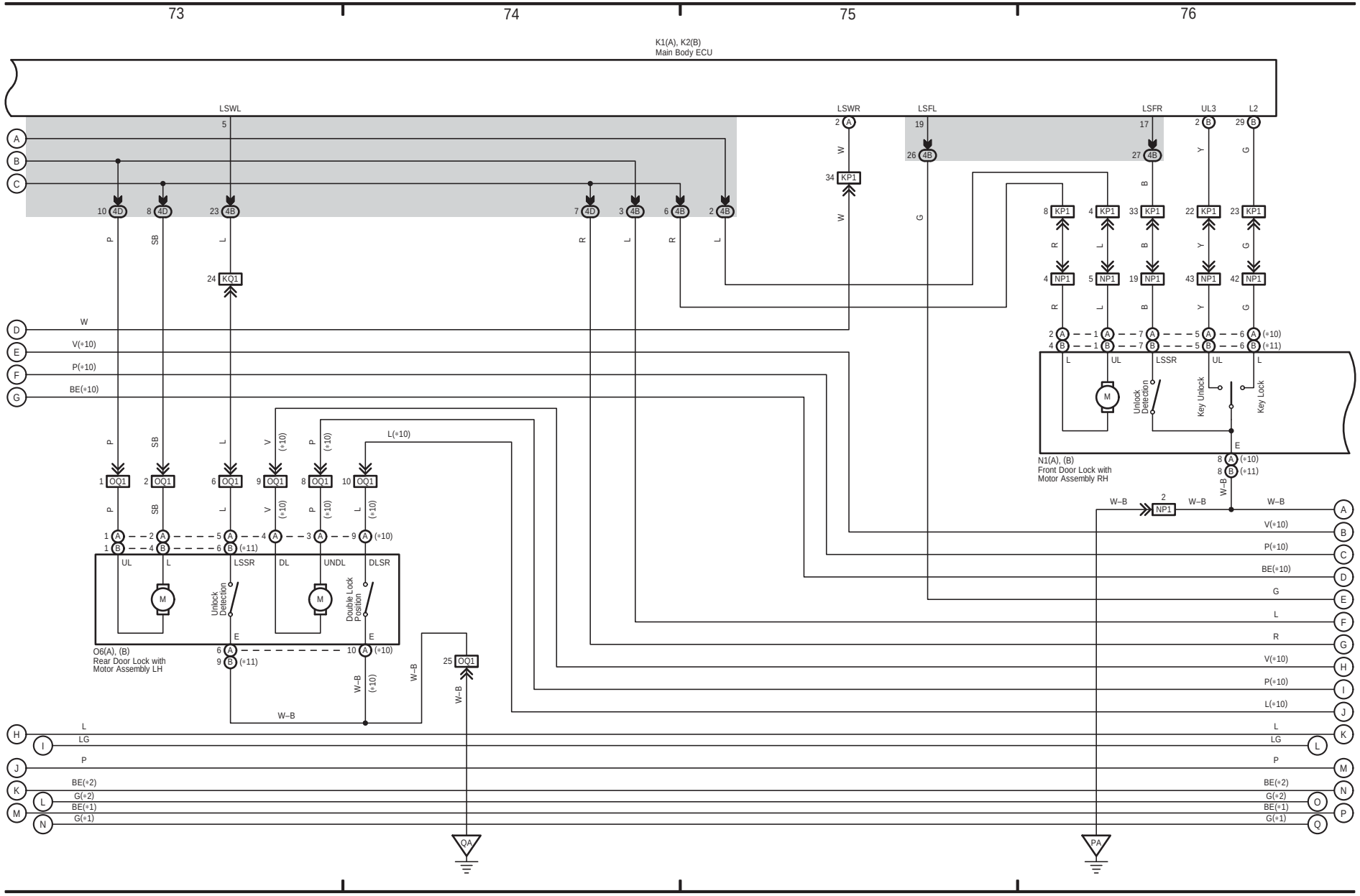

(Cont. next page)

Double Locking (RHD) (Before Oct. 2016 Production)

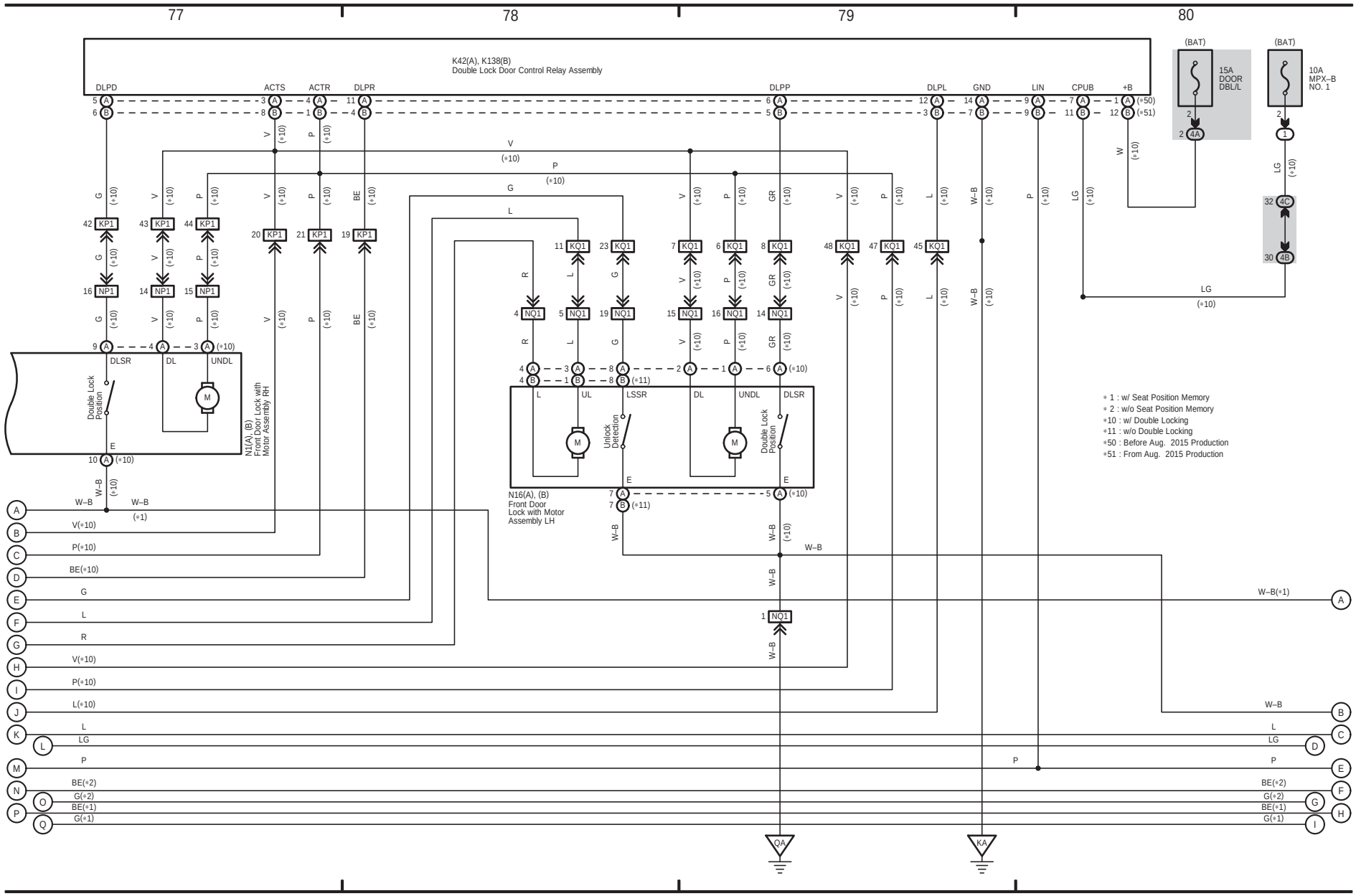

(Cont. next page)

Remote Control Mirror (RHD) (w/ Seat Position Memory) (Before Oct. 2016 Production),
Mirror Heater (RHD) (w/ Seat Position Memory) (Before Oct. 2016 Production)

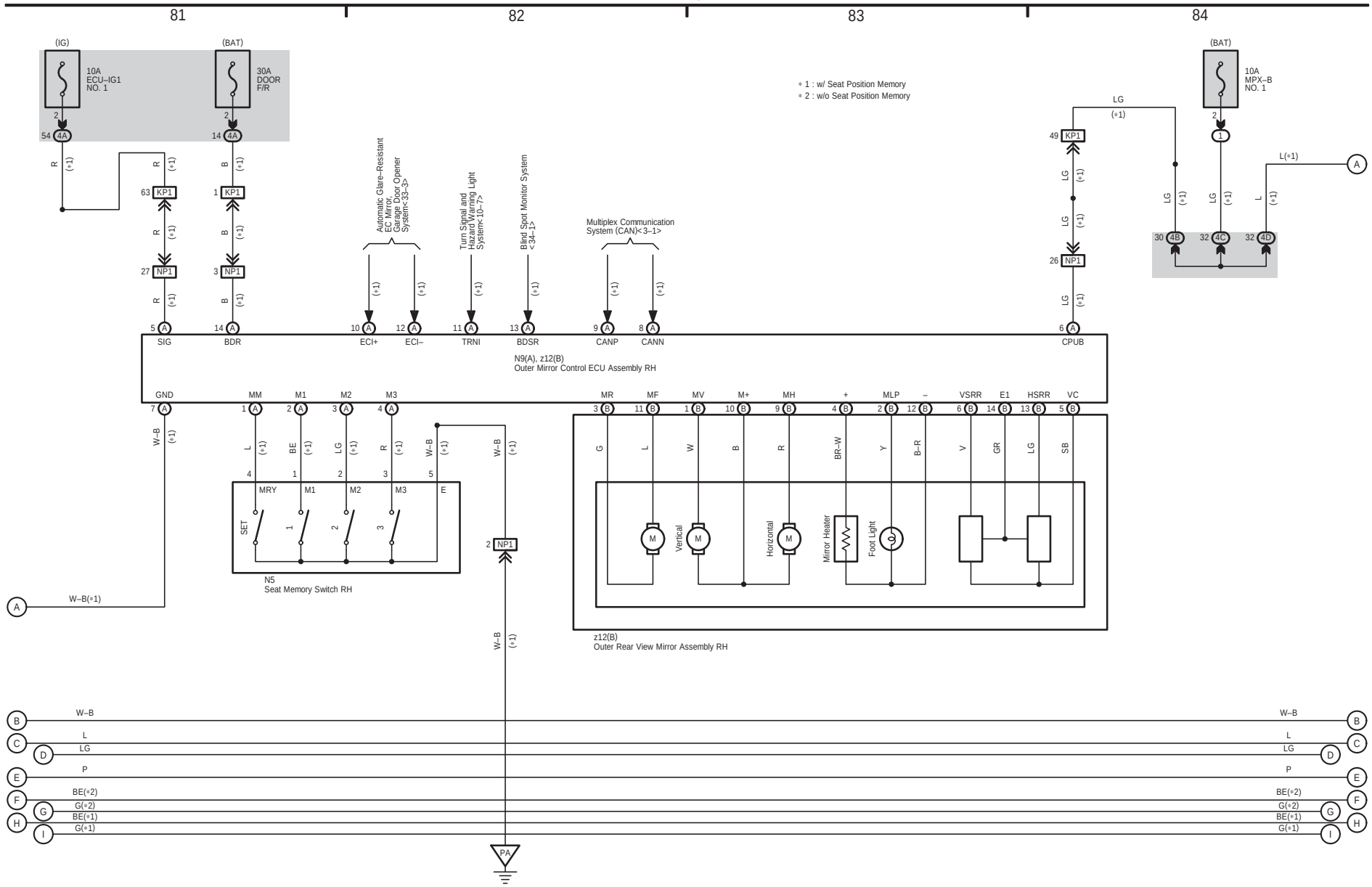

(Cont. next page)

Remote Control Mirror (RHD) (w/ Seat Position Memory) (Before Oct. 2016 Production), Mirror Heater (RHD) (w/ Seat Position Memory) (Before Oct. 2016 Production)

Power Window (RHD) (Before Oct. 2016 Production)

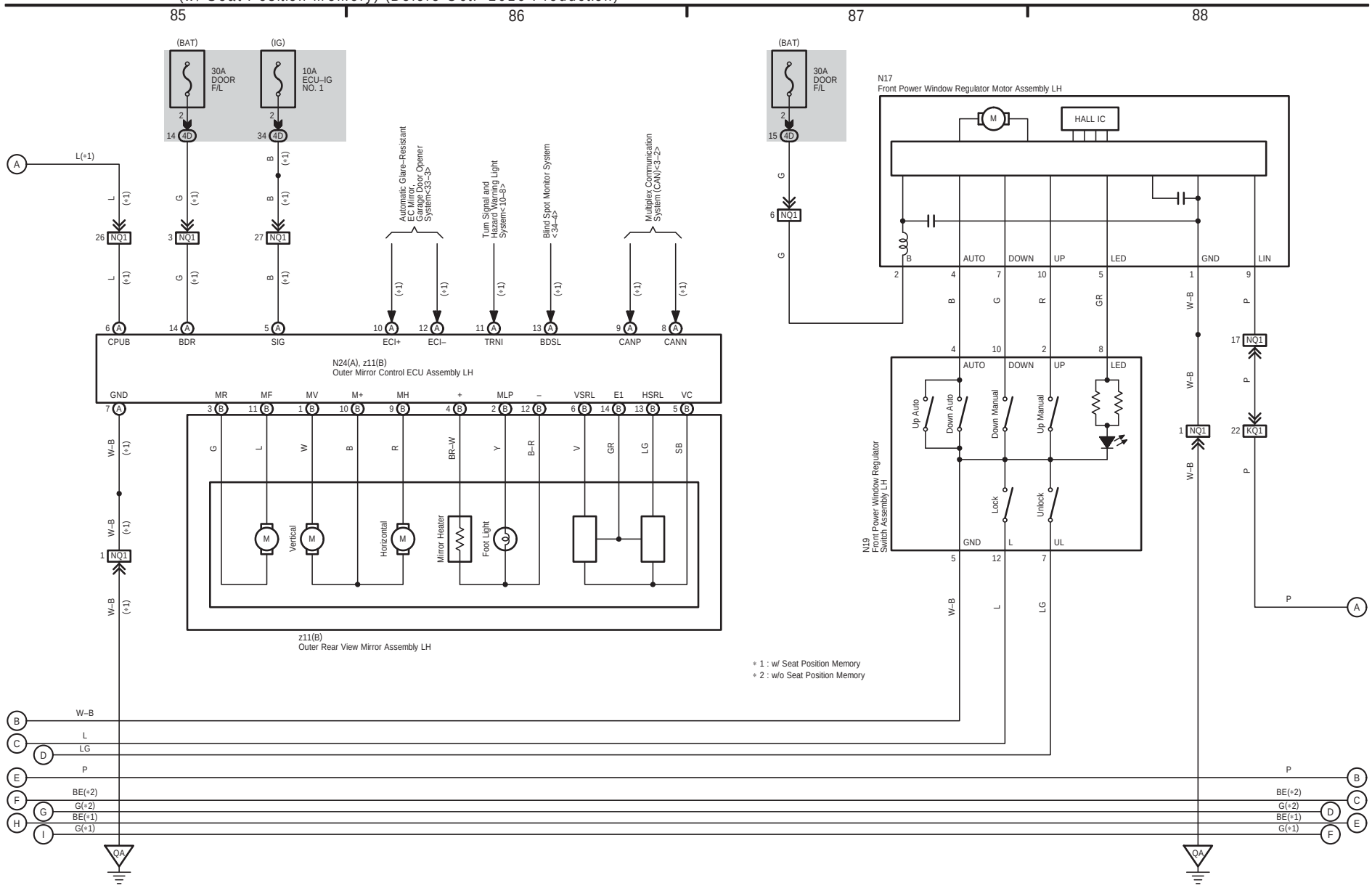

(Cont. next page)

Power Window (RHD) (Before Oct. 2016 Production)

* 1 : w/ Seat Position Memory
* 2 : w/o Seat Position Memory

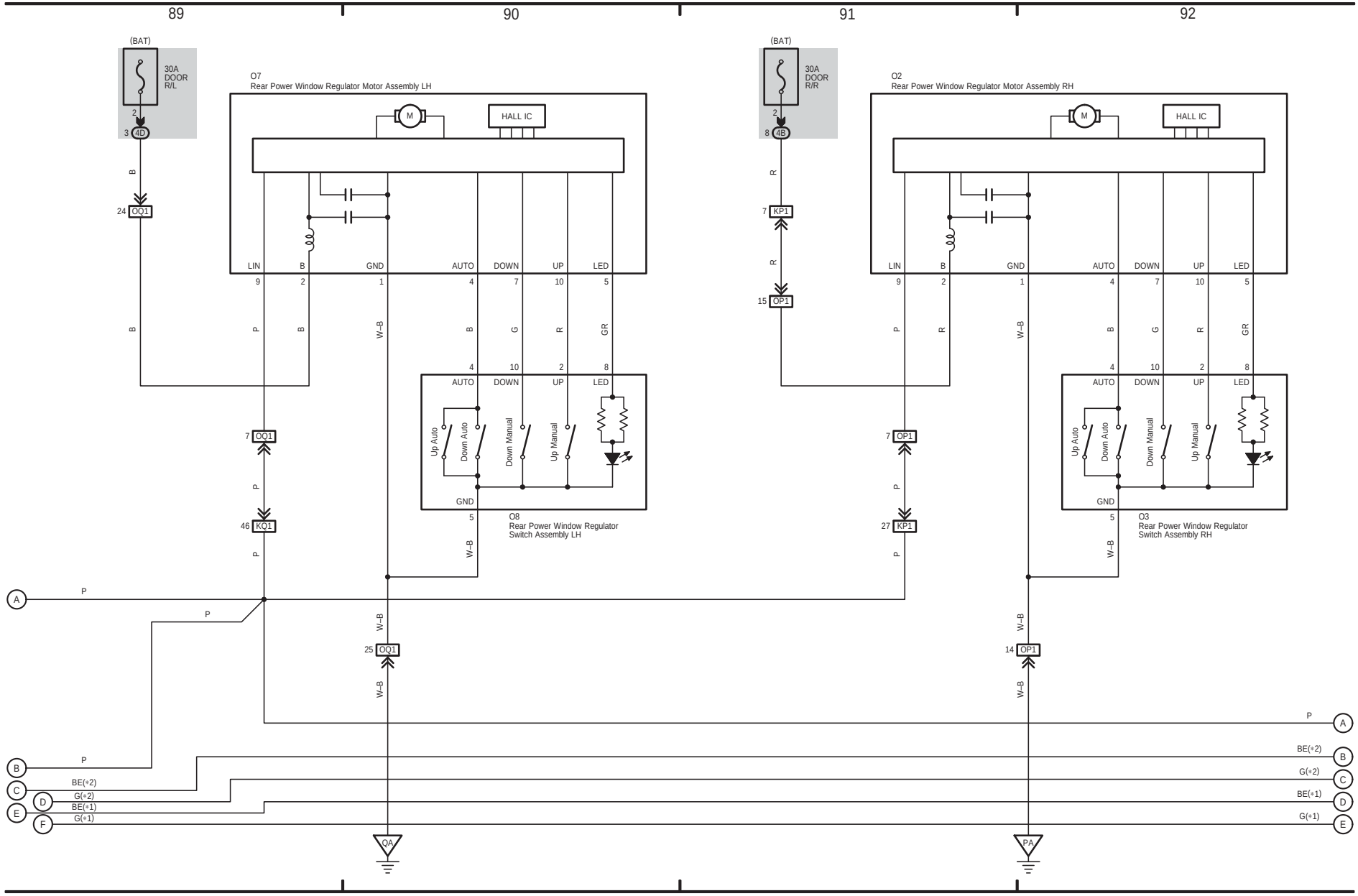

(Cont. next page)

Power Window (RHD) (Before Oct. 2016 Production)

Remote Control Mirror (RHD) (w/o Seat Position Memory) (Before Oct. 2016 Production)

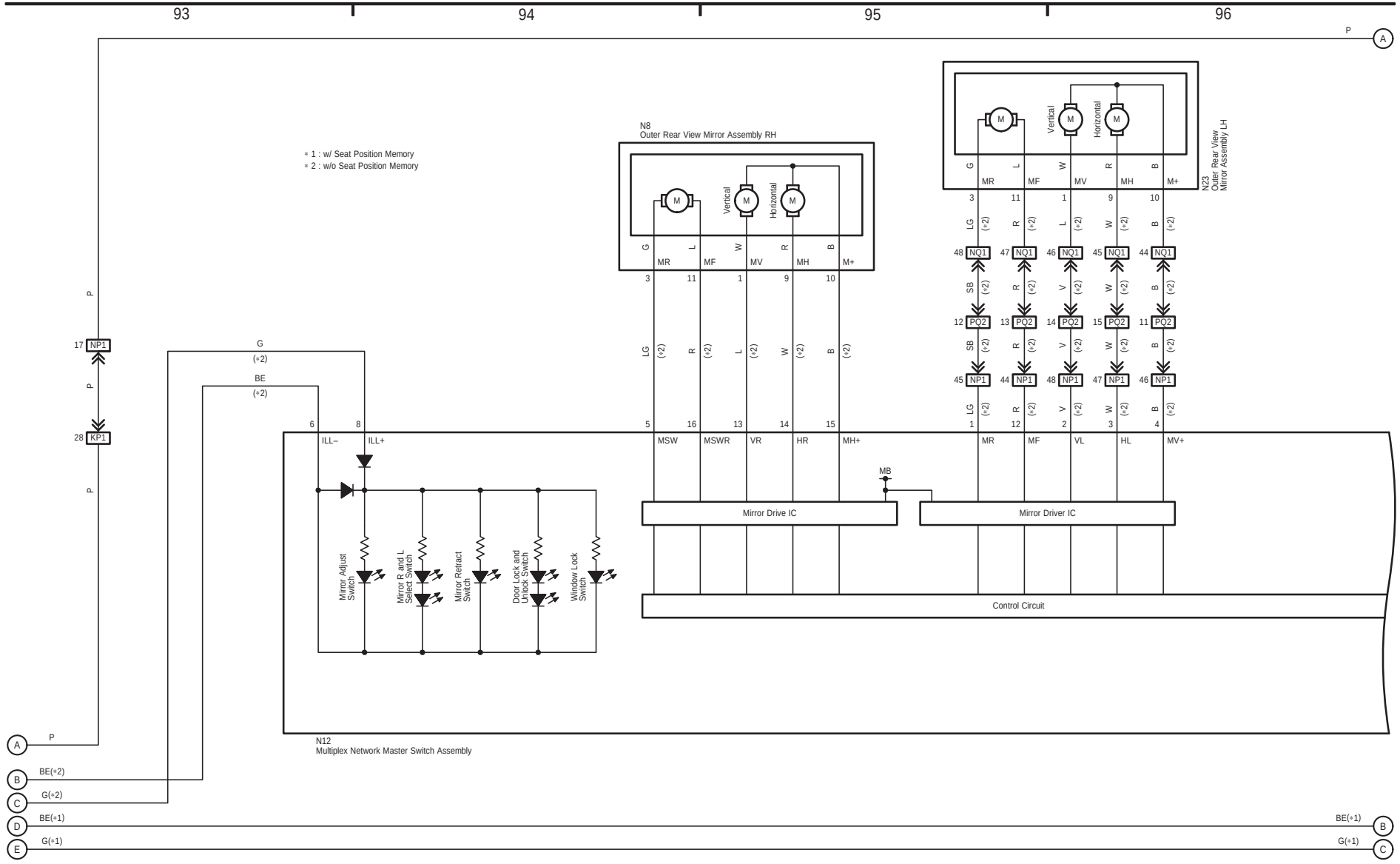

(Cont. next page)

Remote Control Mirror (RHD) (w/o Seat Position Memory)
(Before Oct. 2016 Production)

* 1 : w/ Seat Position Memory
* 2 : w/o Seat Position Memory

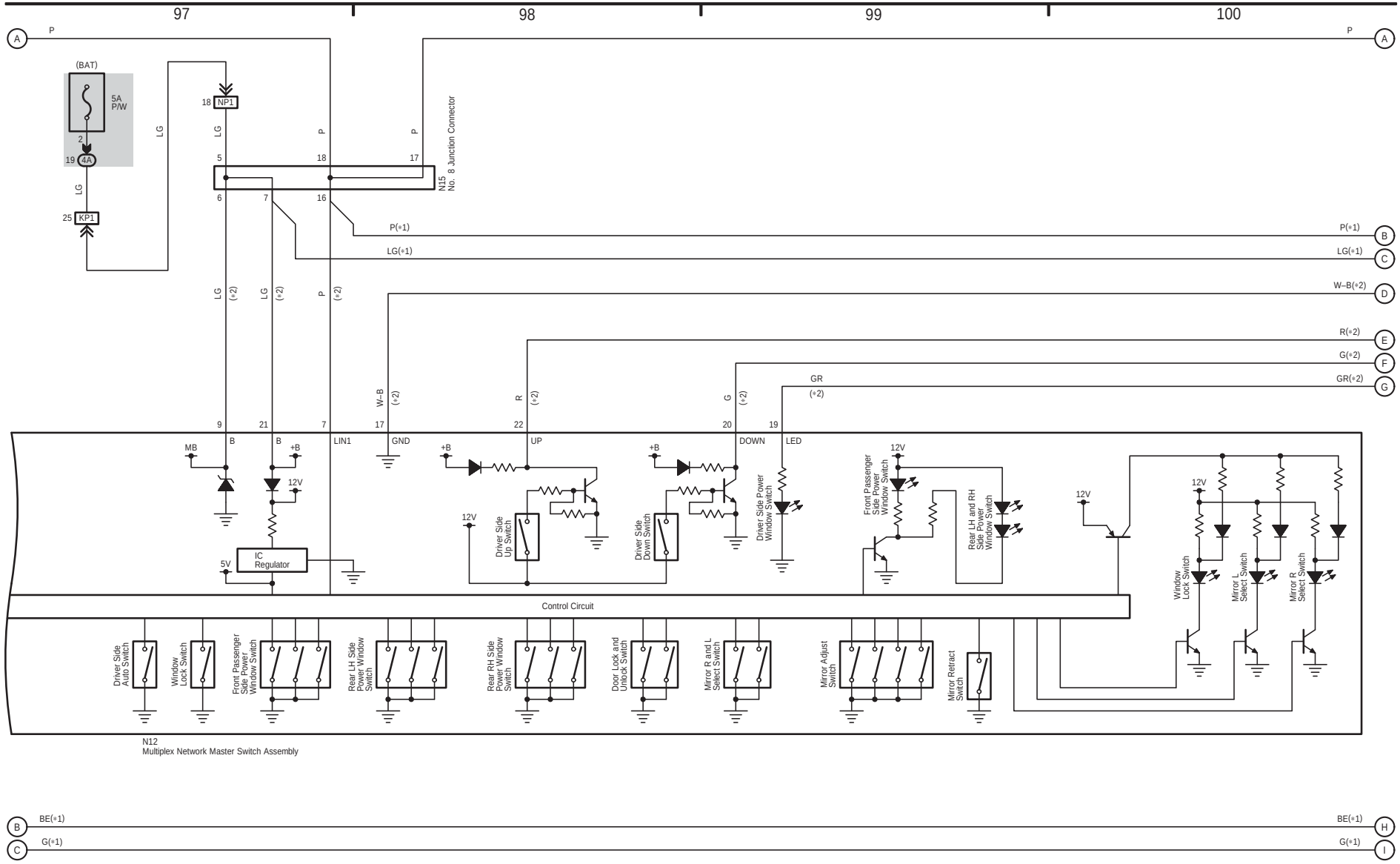

(Cont. next page)

Remote Control Mirror (RHD) (w/o Seat Position Memory)
(Before Oct. 2016 Production)

* 1 : w/ Seat Position Memory
* 2 : w/o Seat Position Memory

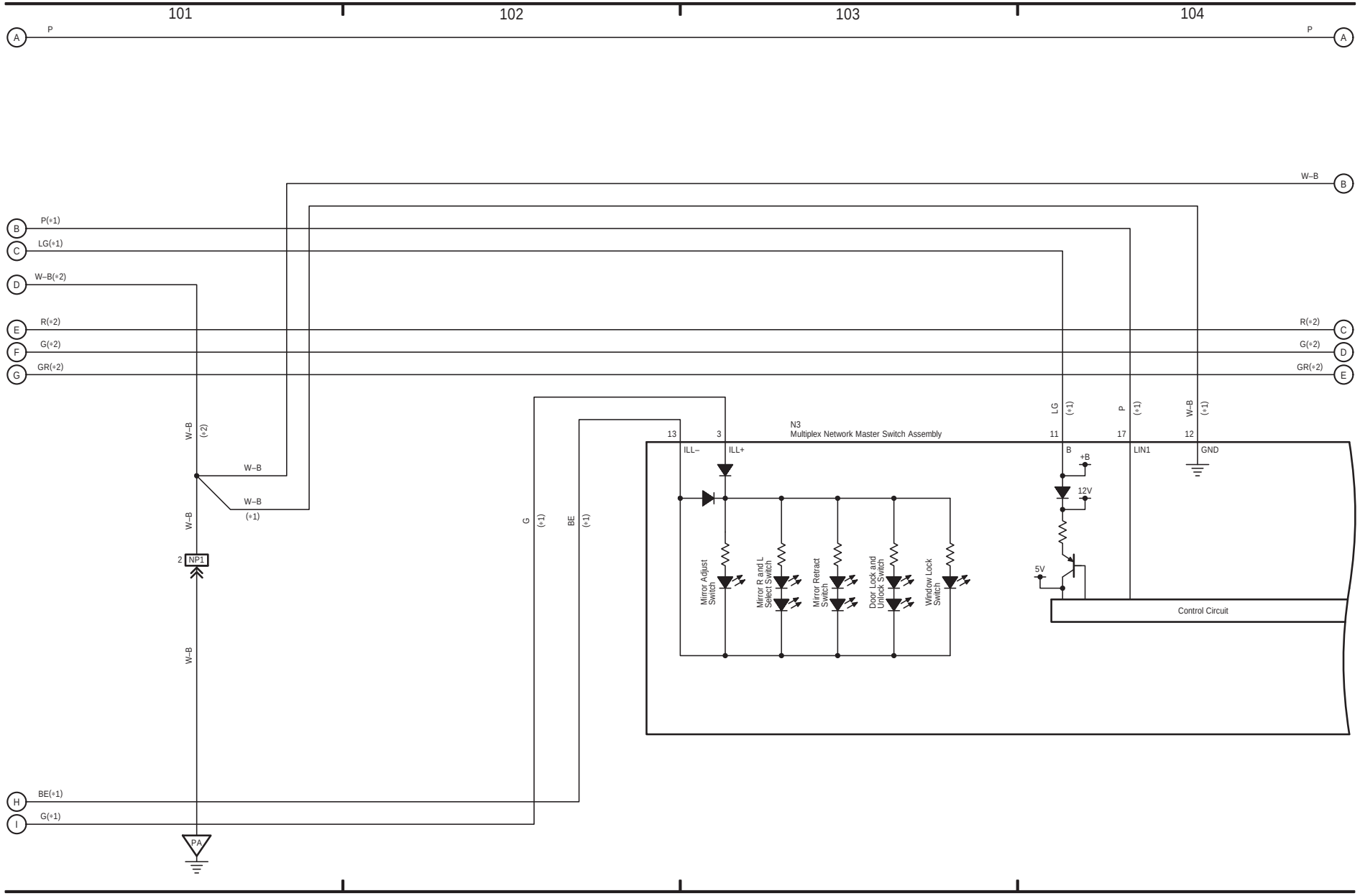

Remote Control Mirror (RHD) (w/o Seat Position Memory)
(Before Oct. 2016 Production)
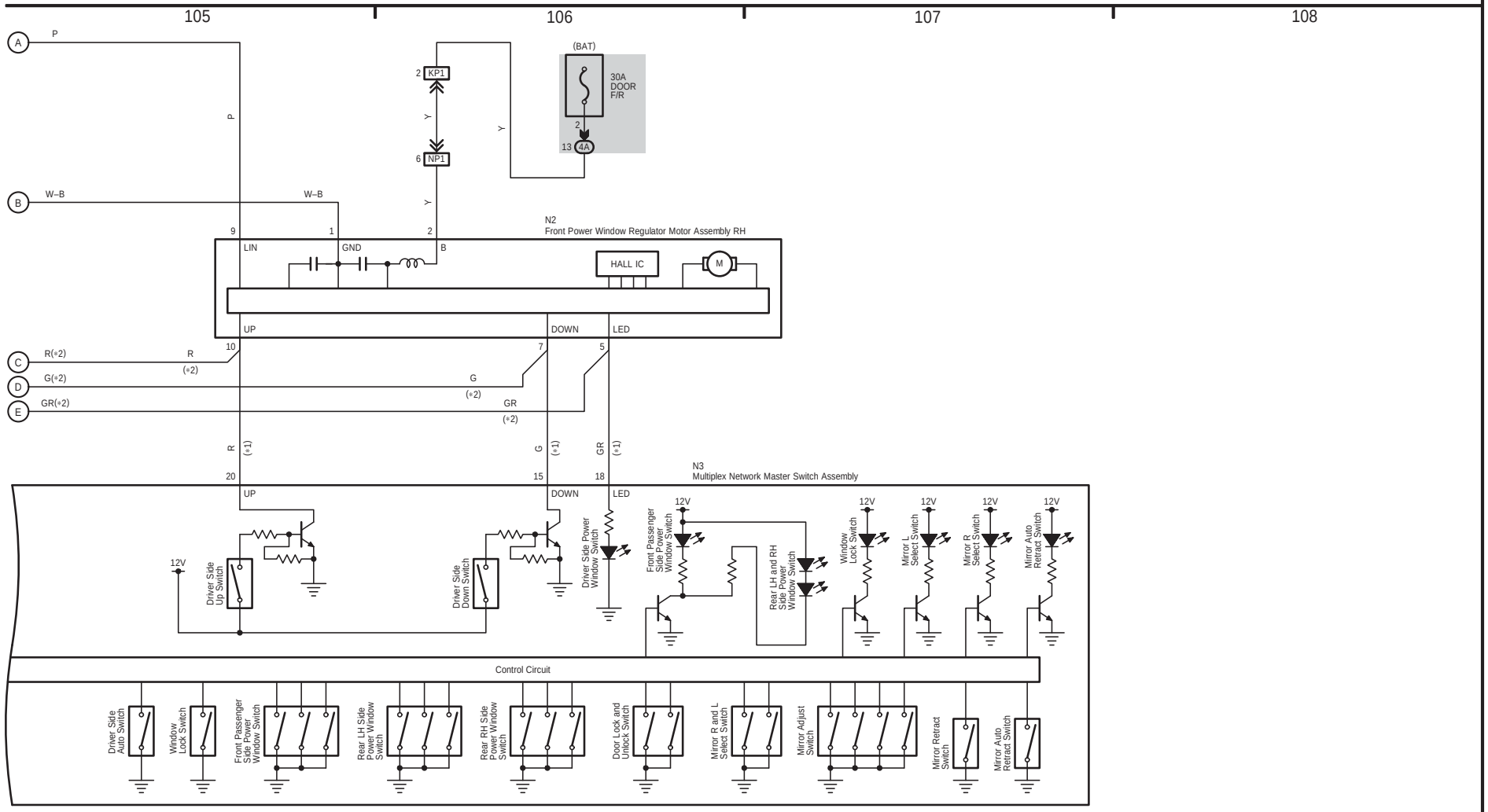
∗ 1 : w/ Seat Position Memory
∗ 2 : w/o Seat Position Memory