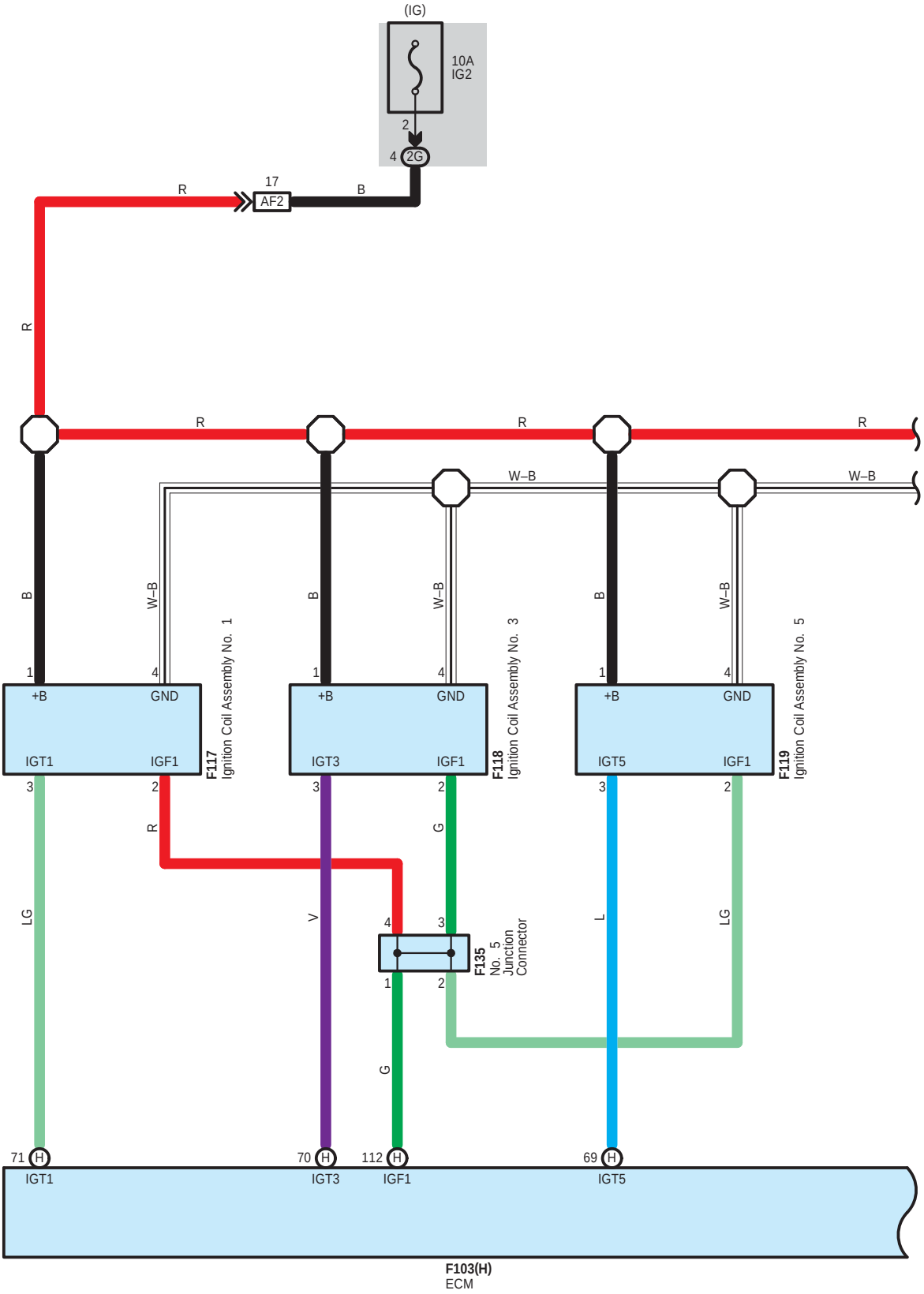
(IG)
10A
IG2
2
4
2G
17
AF2
R
B
R
R
R
R
W–B
W–B
B
W–B
B
W–B
B
W–B
1
4
+B
GND
IGT1
IGF1
F117
Ignition Coil Assembly No. 1
1
4
+B
GND
IGT3
IGF1
F118
Ignition Coil Assembly No. 3
1
4
+B
GND
IGT5
IGF1
F119
Ignition Coil Assembly No. 5
3
2
3
2
3
2
R
G
LG
V
L
LG
4
3
1
2
F135
No. 5
Junction
Connector
G
71
H
IGT1
70
H
IGT3
112
H
IGF1
69
H
IGT5
F103(H)
ECM

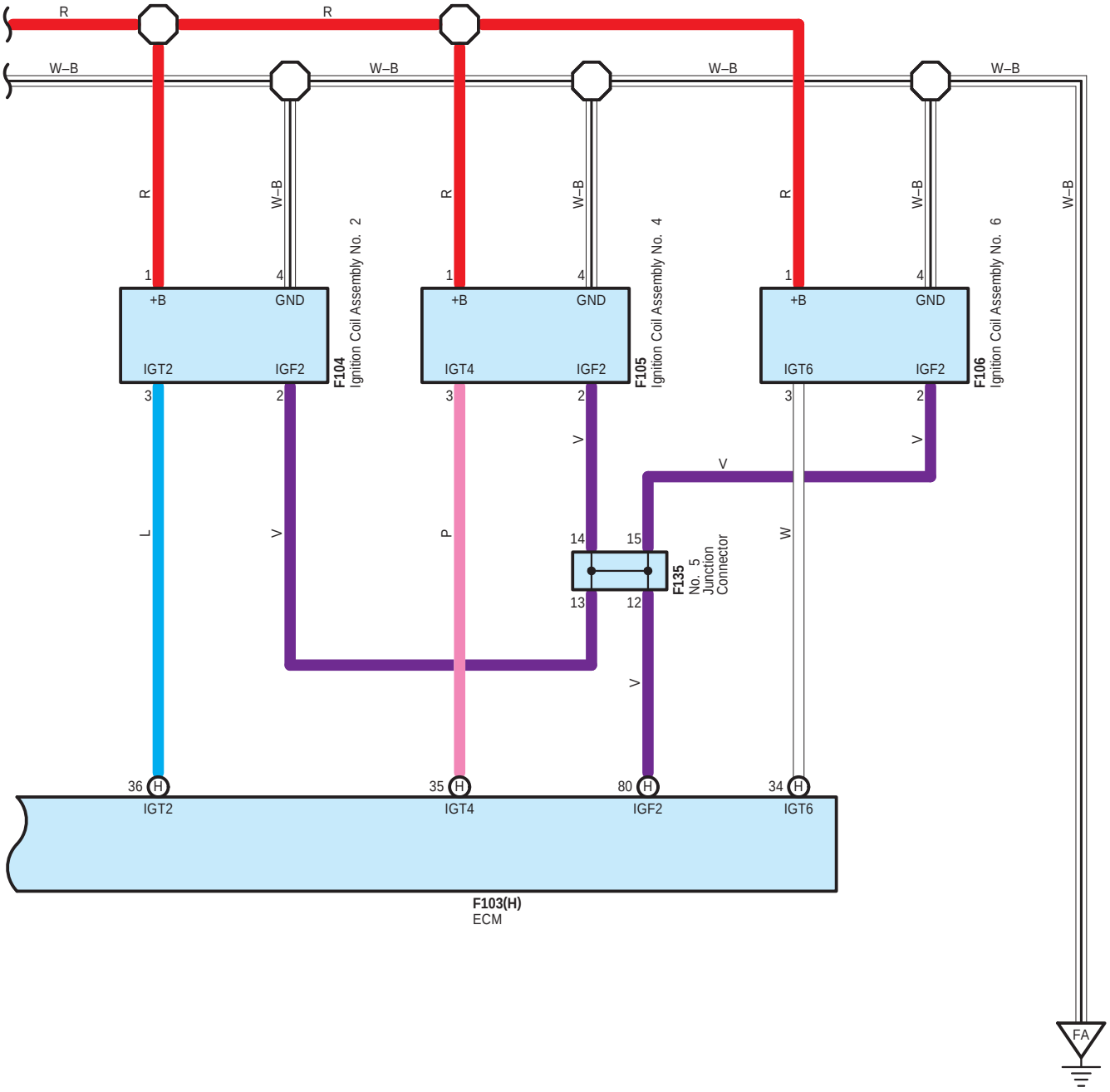
R
R
W–B
W–B
W–B
W–B
R
W–B
R
W–B
R
W–B
W–B
1
4
+B
GND
IGT2
IGF2
3
2
F104
Ignition Coil Assembly No. 2
1
4
+B
GND
IGT4
IGF2
3
2
F105
Ignition Coil Assembly No. 4
1
4
+B
GND
IGT6
IGF2
3
2
F106
Ignition Coil Assembly No. 6
V
V
V
L
V
P
W
14
15
13
12
F135
No. 5
Junction
Connector
V
36 H
IGT2
35 H
IGT4
80 H
IGF2
34 H
IGT6
F103(H)
ECM
FA

F103
Black

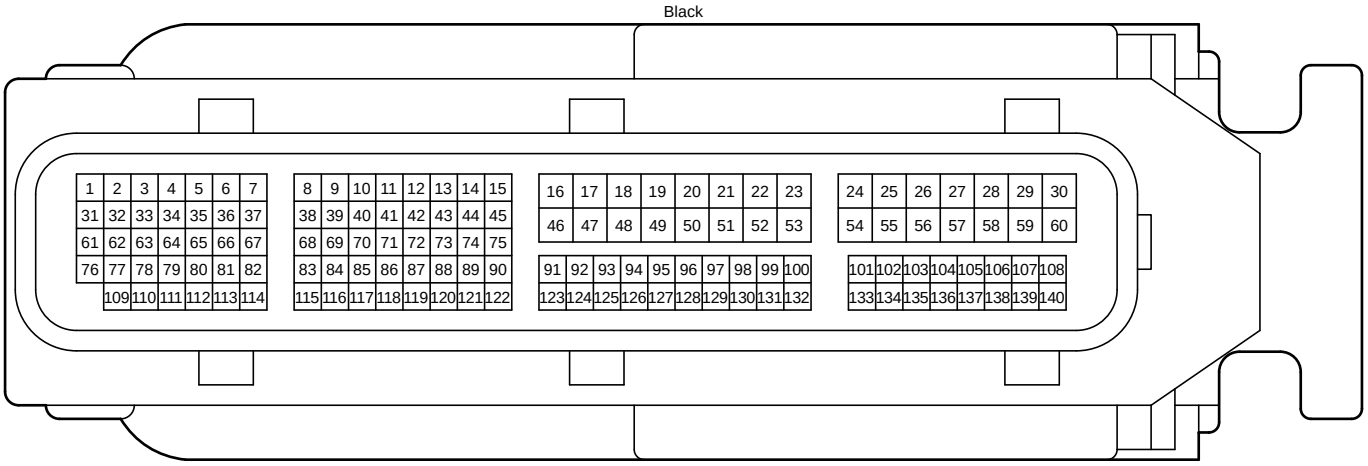

90980-12836

F104
Gray

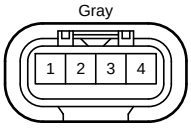

90980-12A29

F105
Black

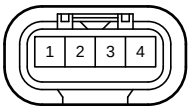

90980-12A29

F106
Gray

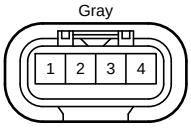

90980-12A29

F117
Gray

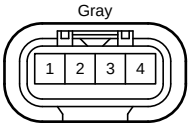

90980-12A29

F118
Black

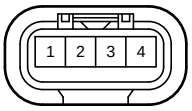

90980-12A29

F119
Gray

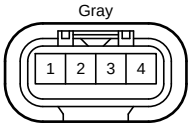

90980-12A29

F135
Blue

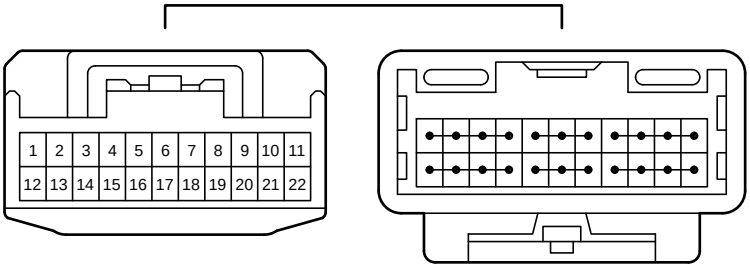

90980-12372

2G
White

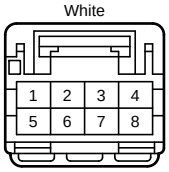

90980-12A54

AF2
Gray

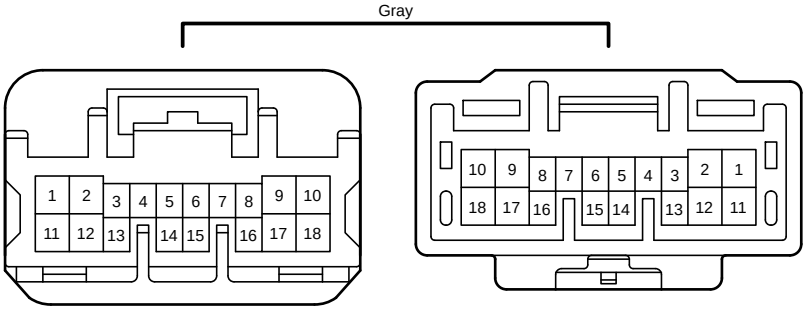

90980-12739

90980-12738