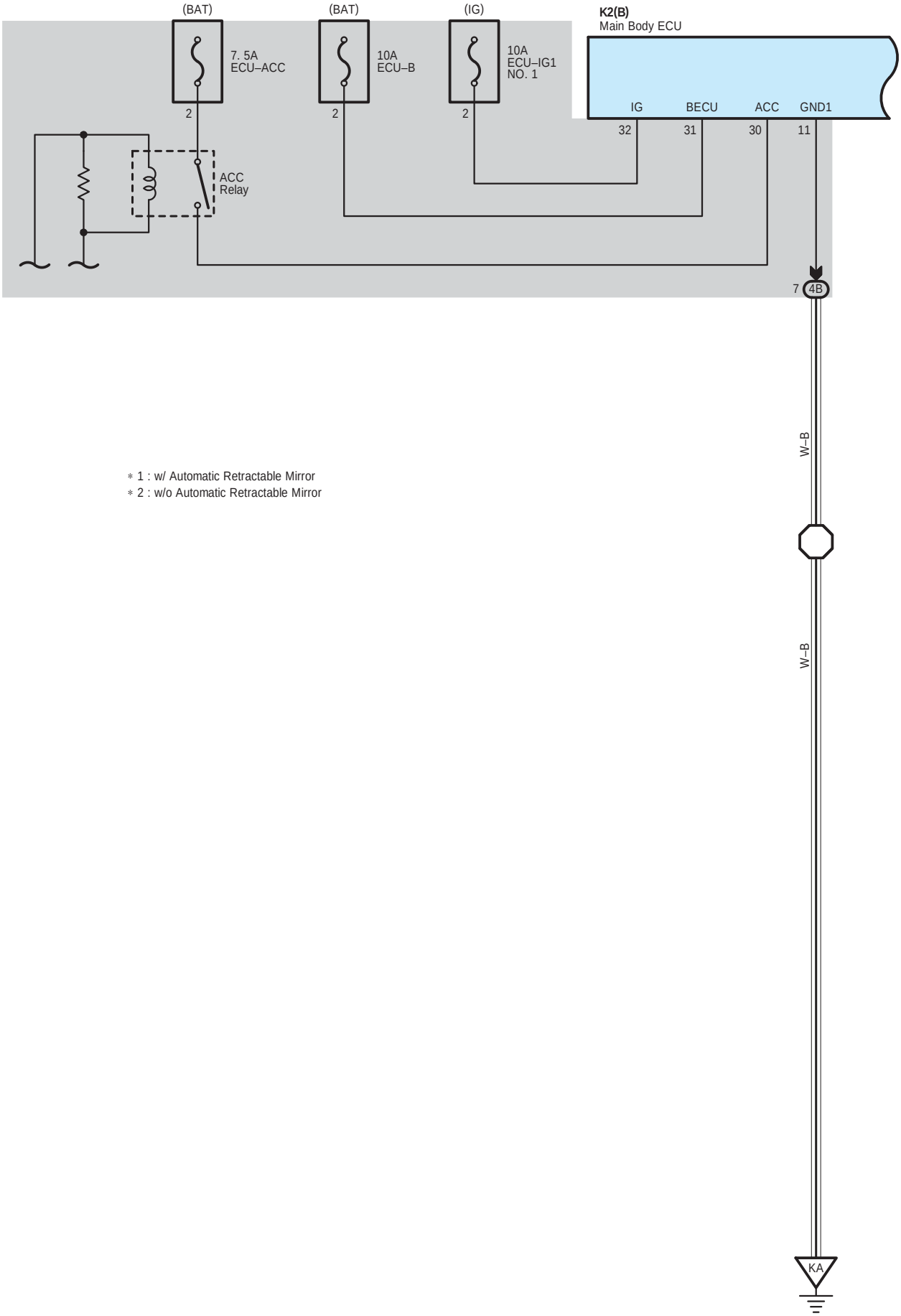

∗ 1 : w/ Automatic Retractable Mirror
∗ 2 : w/o Automatic Retractable Mirror

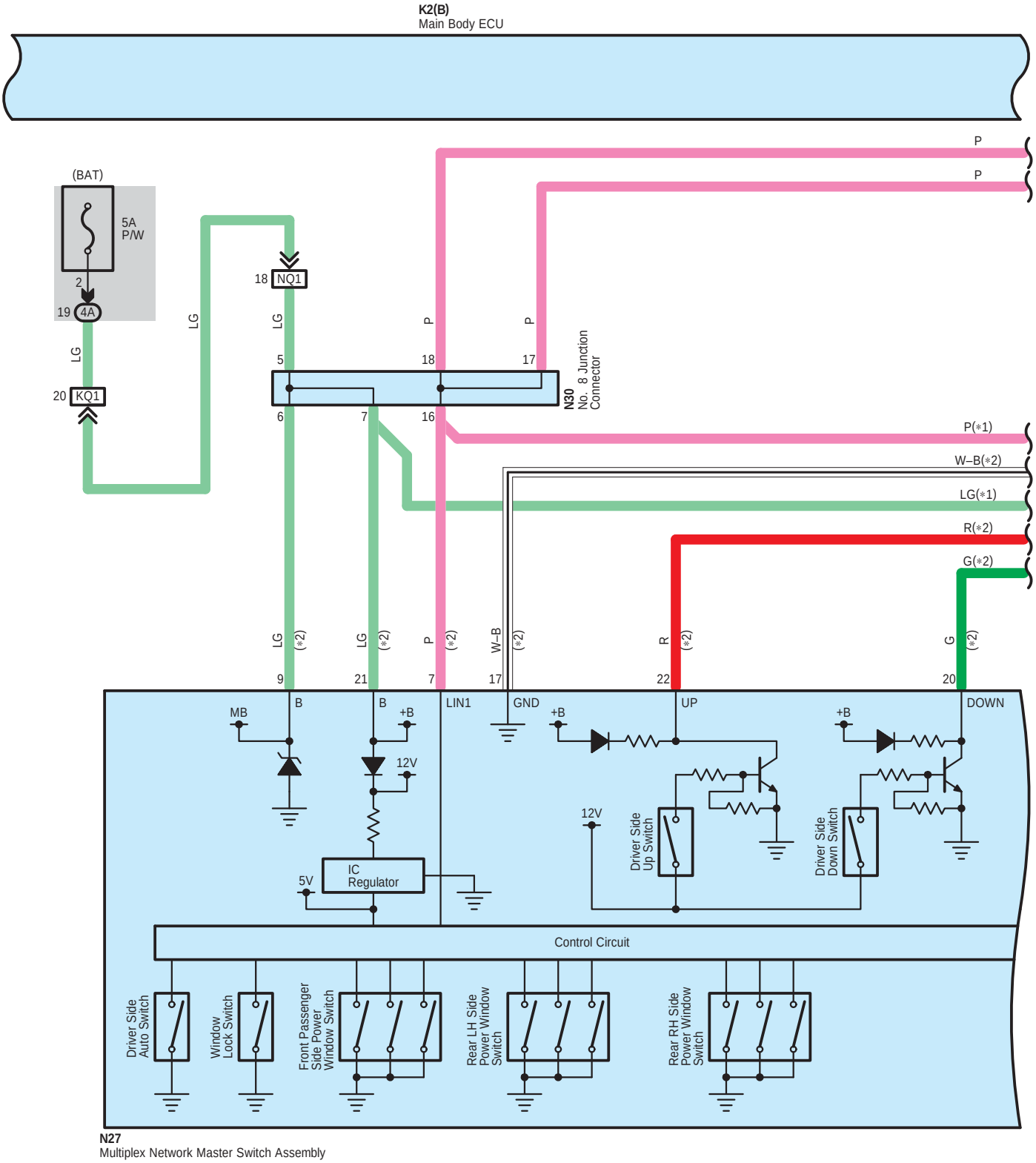
K2(B)
Main Body ECU
(BAT)
5A
P/W
2
19
4A
LG
20
KQ1
LG
18
NQ1
LG
P
P
5
18
17
6
7
16
N30
No. 8 Junction
Connector
P
P
P(*1)
W–B(*2)
LG(*1)
R(*2)
G(*2)
LG
(*2)
LG
(*2)
P
(*2)
W–B
(*2)
R
(*2)
G
(*2)
9
21
7
17
22
20
B
B
LIN1
GND
UP
DOWN
MB
+B
12V
+B
+B
12V
5V
IC
Regulator
Driver Side
Up Switch
Driver Side
Down Switch
Control Circuit
Driver Side
Auto Switch
Window
Lock Switch
Front Passenger
Side Power
Window Switch
Rear LH Side
Power Window
Switch
Rear RH Side
Power Window
Switch
N27
Multiplex Network Master Switch Assembly

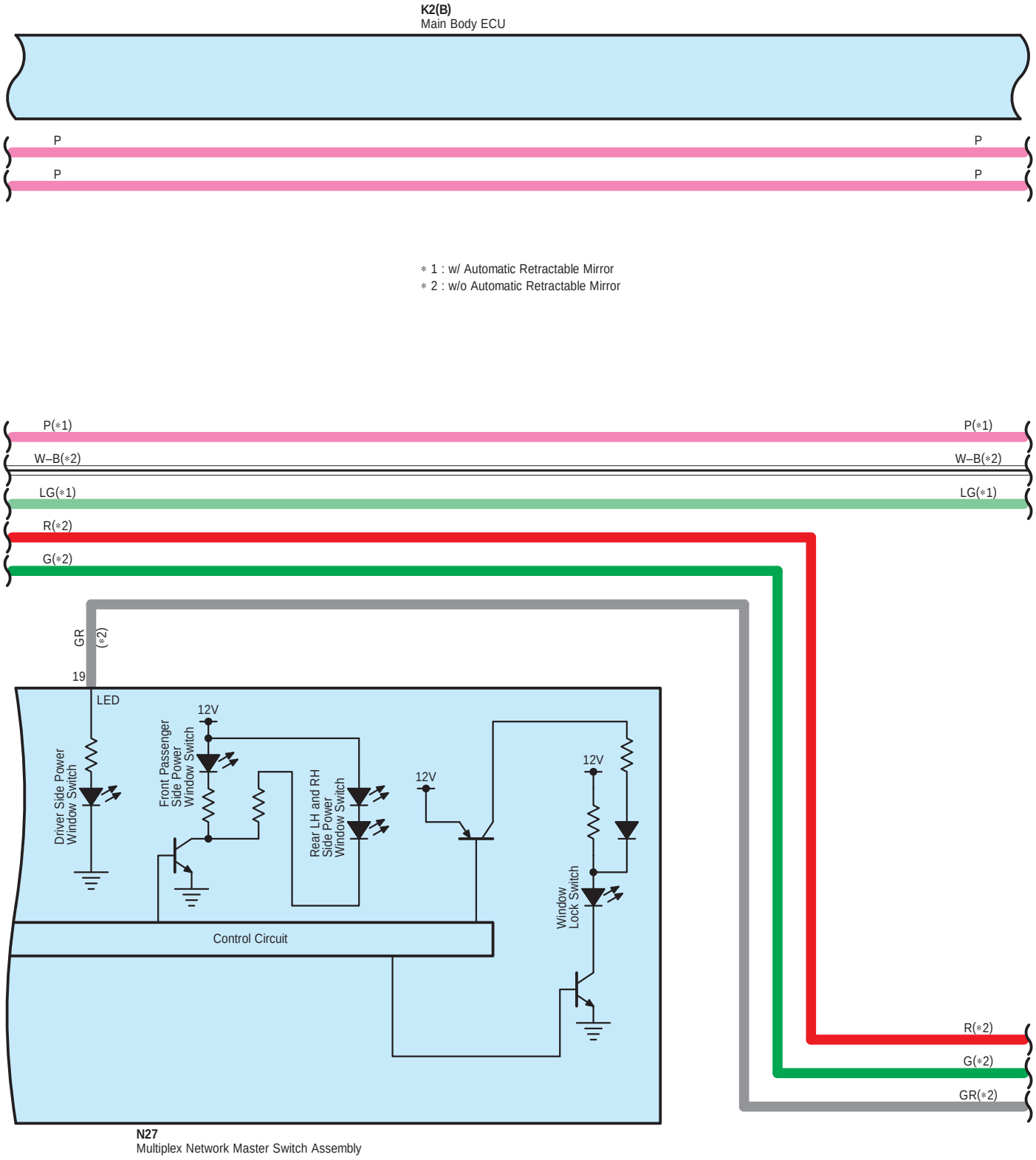
K2(B)
Main Body ECU
P
P
P
P
∗ 1 : w/ Automatic Retractable Mirror
∗ 2 : w/o Automatic Retractable Mirror
P(∗1)
P(∗1)
W–B(∗2)
W–B(∗2)
LG(∗1)
LG(∗1)
R(∗2)
G(∗2)
GR
(∗2)
19
LED
12V
Driver Side Power Window Switch
Front Passenger Side Power Window Switch
Rear LH and RH Side Power Window Switch
12V
12V
Window Lock Switch
Control Circuit
R(∗2)
G(∗2)
GR(∗2)
N27
Multiplex Network Master Switch Assembly

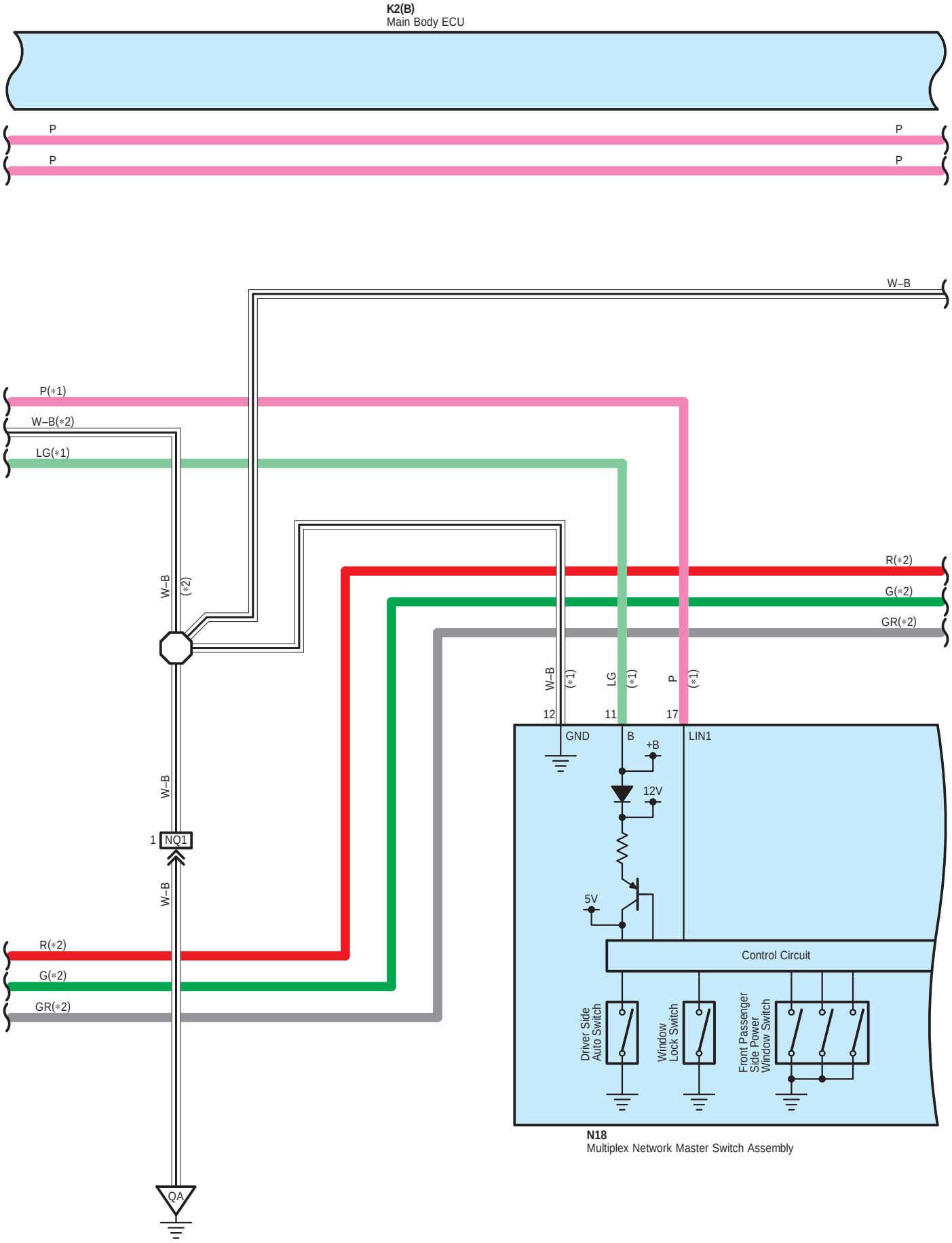
K2(B)
Main Body ECU
P
P
P
P
W–B
P(*1)
W–B(*2)
LG(*1)
R(*2)
G(*2)
GR(*2)
W–B
(*2)
W–B
(*1)
LG
(*1)
P
(*1)
12
11
17
GND
B
LIN1
+B
12V
5V
W–B
1
NQ1
W–B
R(*2)
G(*2)
GR(*2)
Control Circuit
Driver Side Auto Switch
Window Lock Switch
Front Passenger Side Power Window Switch
N18
Multiplex Network Master Switch Assembly
QA

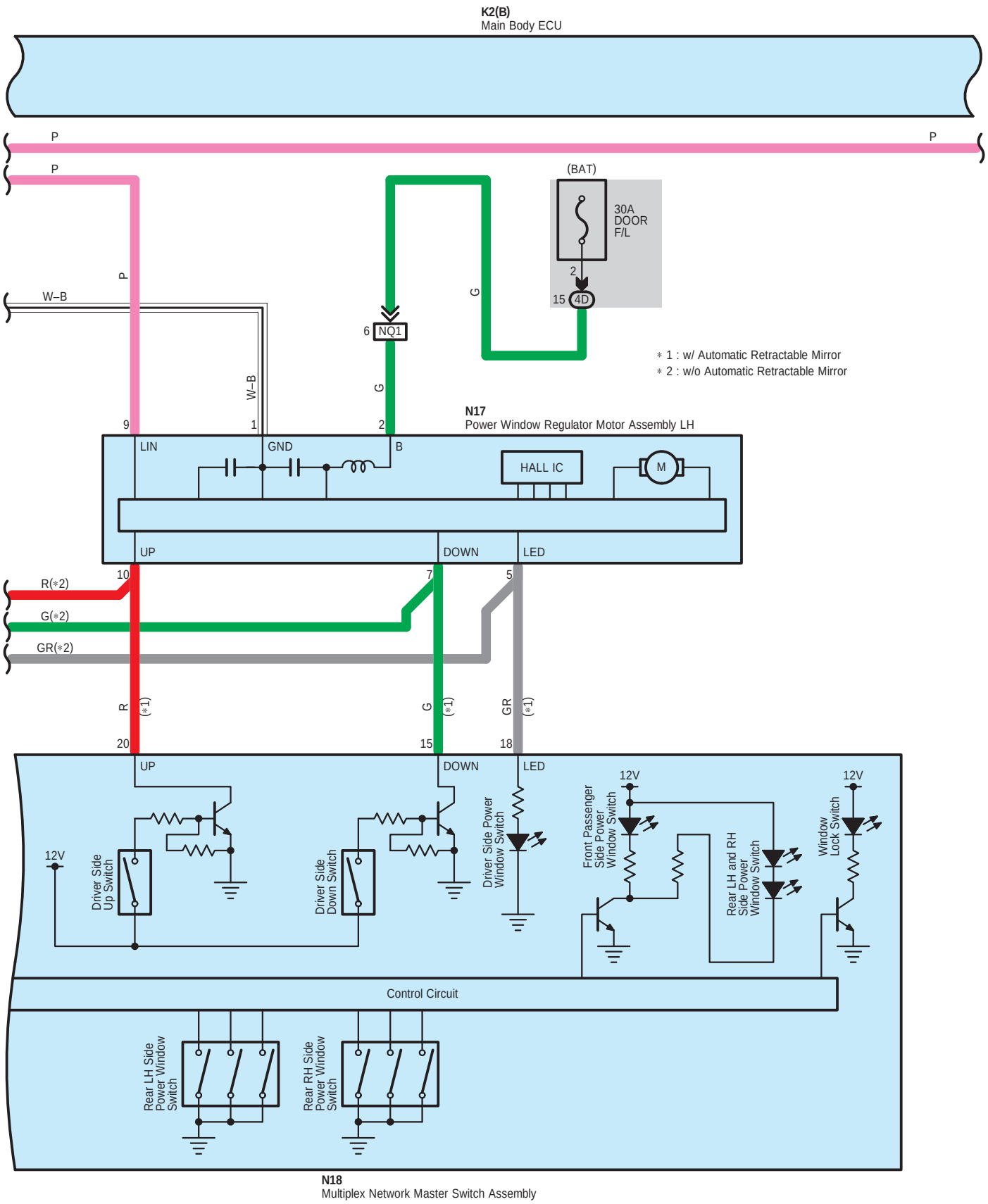
K2(B)
Main Body ECU
P
P
P
P
(BAT)
30A
DOOR
F/L
2
15
4D
G
W–B
W–B
6
NQ1
G
∗ 1 : w/ Automatic Retractable Mirror
∗ 2 : w/o Automatic Retractable Mirror
N17
Power Window Regulator Motor Assembly LH
9
1
2
LIN
GND
B
HALL IC
M
UP
DOWN
LED
R(∗2)
G(∗2)
GR(∗2)
10
7
5
R
(∗1)
G
(∗1)
GR
(∗1)
20
15
18
UP
DOWN
LED
12V
Driver Side
Up Switch
Driver Side
Down Switch
Driver Side Power
Window Switch
Front Passenger
Side Power
Window Switch
12V
Rear LH and RH
Side Power
Window Switch
Window
Lock Switch
12V
Control Circuit
Rear LH Side
Power Window
Switch
Rear RH Side
Power Window
Switch
N18
Multiplex Network Master Switch Assembly

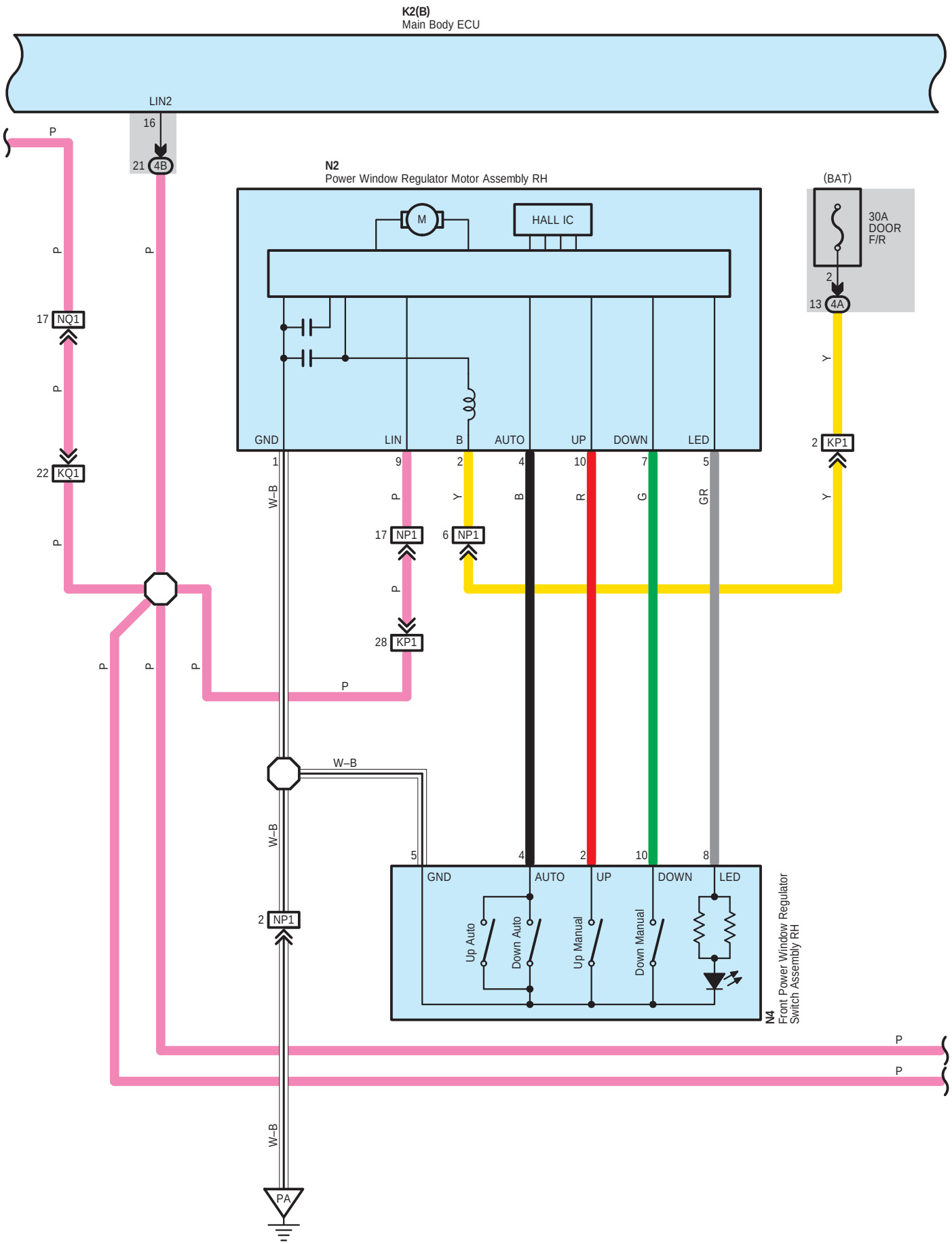
K2(B)
Main Body ECU
LIN2
16
21 4B
N2
Power Window Regulator Motor Assembly RH
M
HALL IC
(BAT)
30A
DOOR
F/R
2
13 4A
17 NQ1
22 KQ1
2 KP1
GND
LIN
B
AUTO
UP
DOWN
LED
1
9
2
4
10
7
5
W–B
P
Y
B
R
G
GR
17 NP1
6 NP1
28 KP1
W–B
5
4
2
10
8
GND
AUTO
UP
DOWN
LED
Up Auto
Down Auto
Up Manual
Down Manual
2 NP1
N4
Front Power Window Regulator
Switch Assembly RH
PA

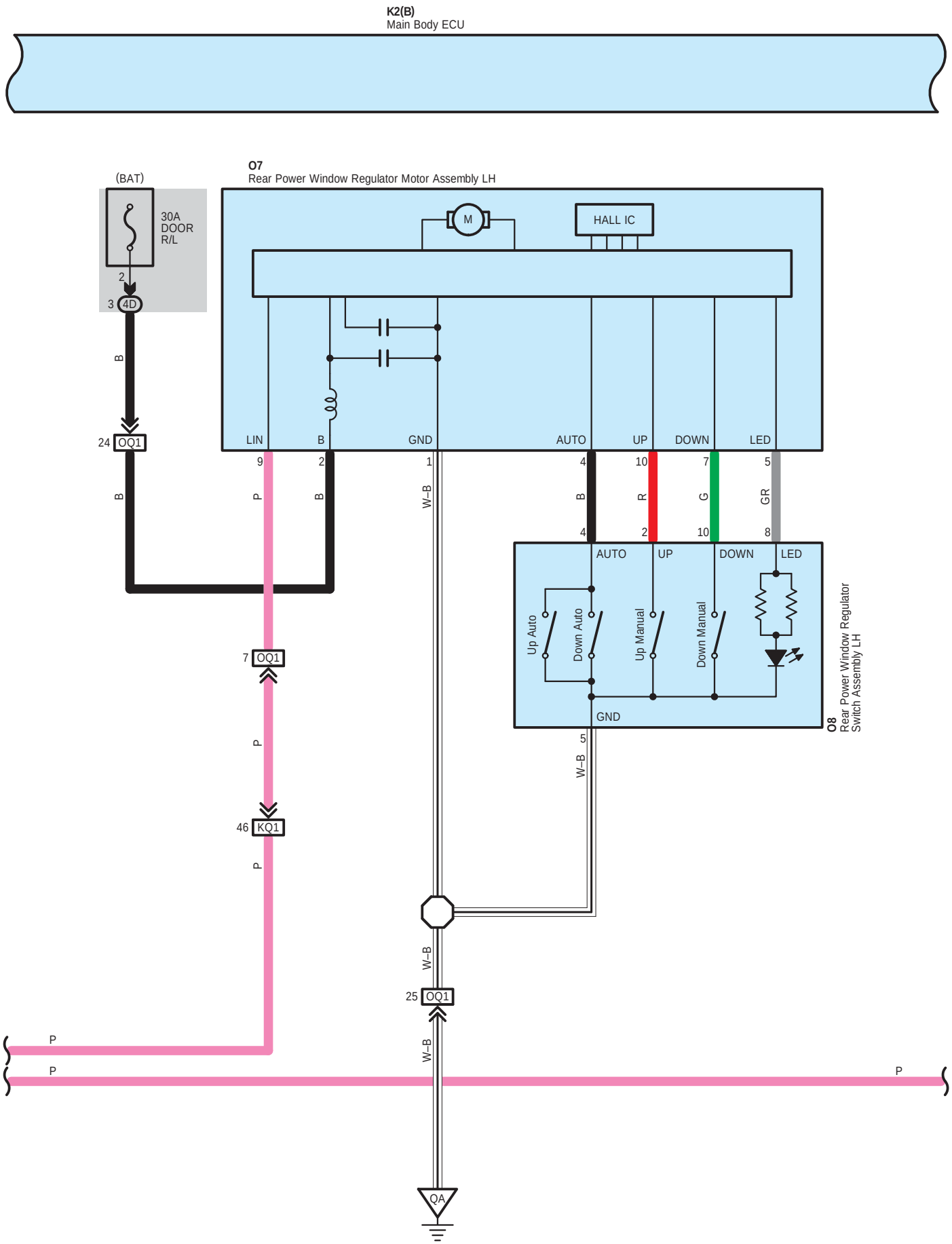
K2(B)
Main Body ECU
(BAT)
30A
DOOR
R/L
2
3 4D
B
24 OQ1
B
O7
Rear Power Window Regulator Motor Assembly LH
M
HALL IC
LIN
B
GND
AUTO
UP
DOWN
LED
9
2
1
4
10
7
5
P
B
W–B
B
R
G
GR
4
2
10
8
AUTO
UP
DOWN
LED
Up Auto
Down Auto
Up Manual
Down Manual
GND
O8
Rear Power Window Regulator
Switch Assembly LH
5
W–B
7 OQ1
P
46 KQ1
P
W–B
25 OQ1
W–B
P
P
P
QA

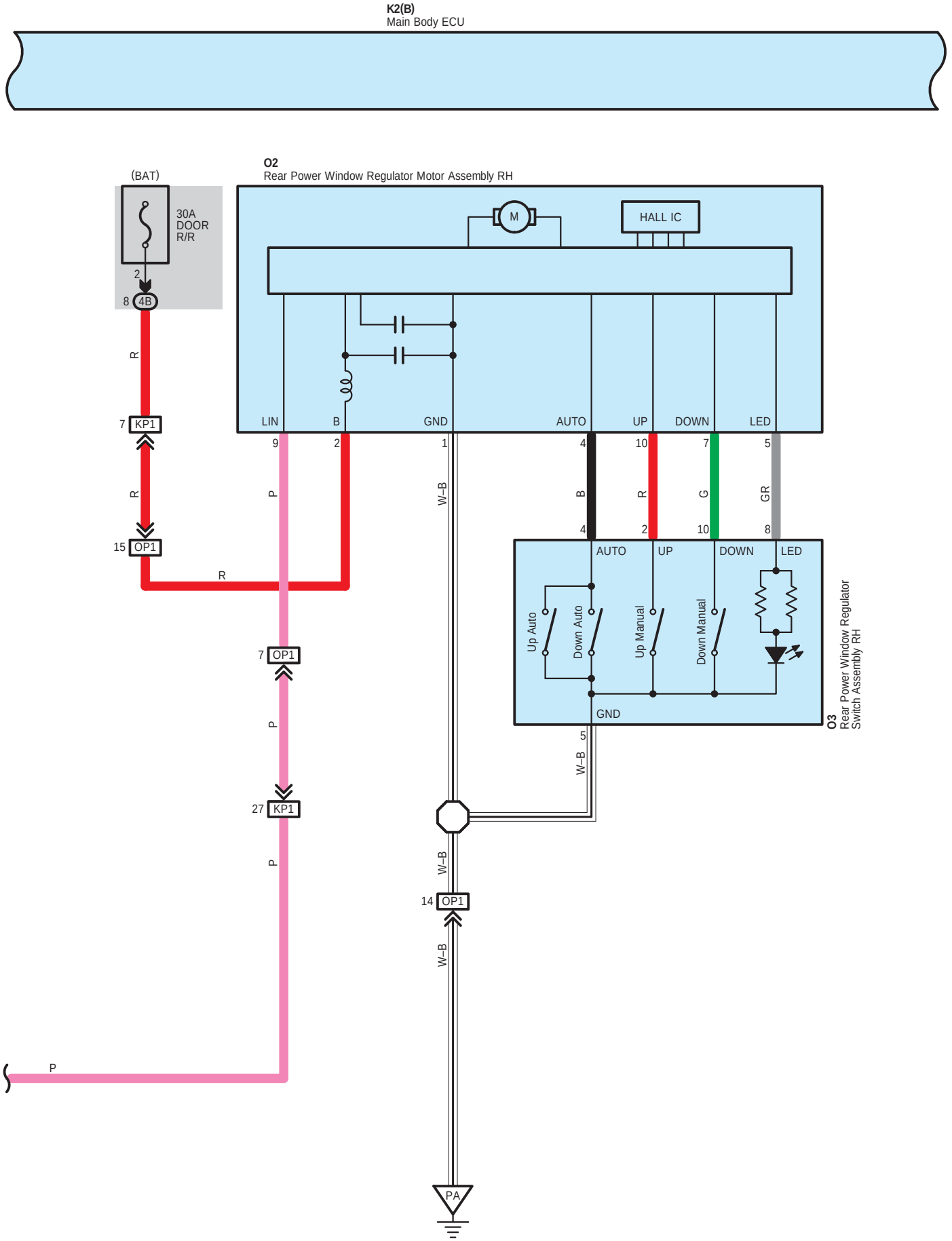
K2(B)
Main Body ECU
(BAT)
30A
DOOR
R/R
2
8
4B
R
7
KP1
R
15
OP1
R
O2
Rear Power Window Regulator Motor Assembly RH
M
HALL IC
LIN
B
GND
AUTO
UP
DOWN
LED
9
2
1
4
10
7
5
P
W–B
B
R
G
GR
4
2
10
8
AUTO
UP
DOWN
LED
Up Auto
Down Auto
Up Manual
Down Manual
GND
5
W–B
O3
Rear Power Window Regulator
Switch Assembly RH
7
OP1
P
27
KP1
P
W–B
14
OP1
W–B
P
PA

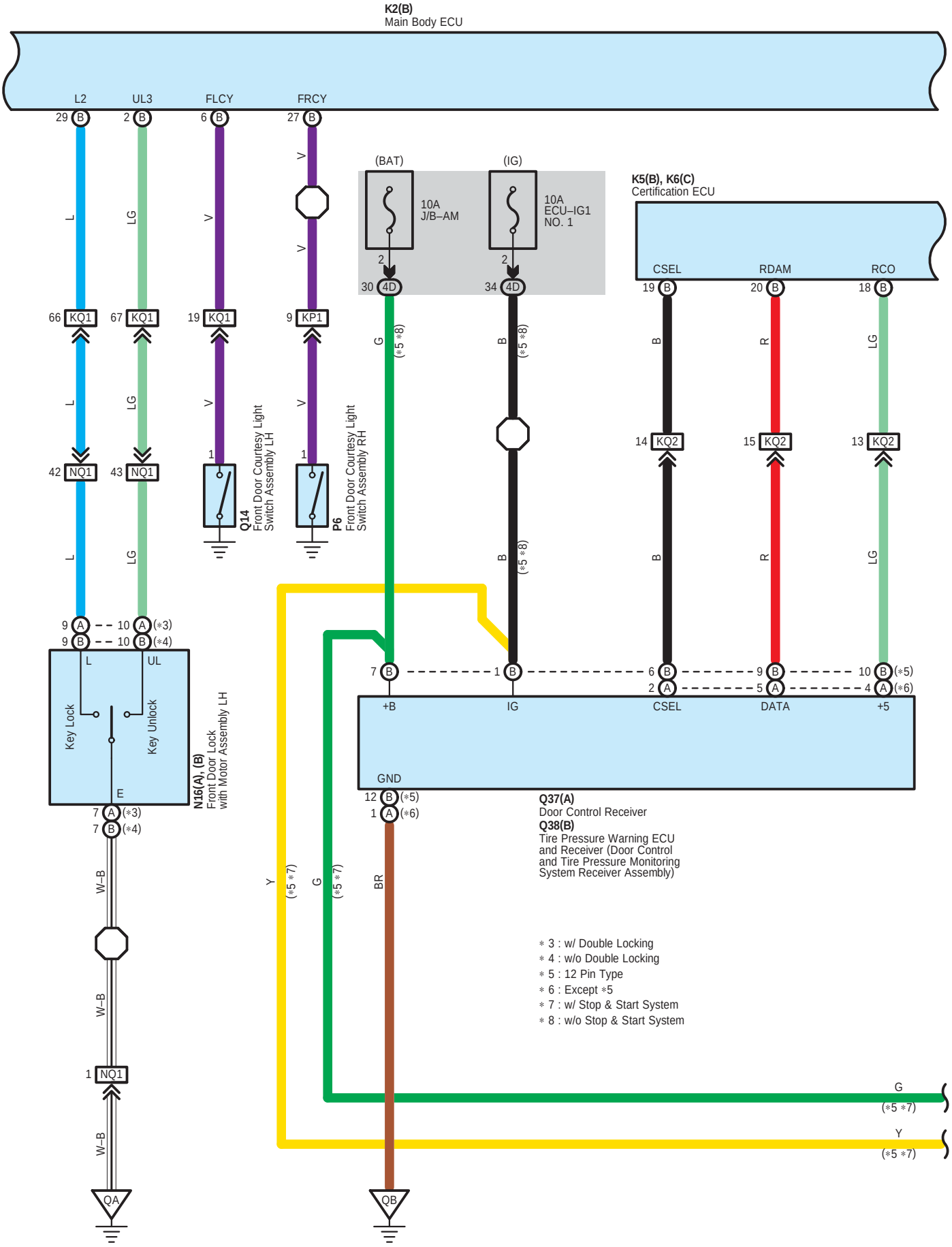
K2(B)
Main Body ECU
L2
UL3
FLCY
FRCY
29 B
2 B
6 B
27 B
(BAT)
(IG)
10A
J/B–AM
10A
ECU–IG1
NO. 1
30 4D
34 4D
K5(B), K6(C)
Certification ECU
CSEL
RDAM
RCO
19 B
20 B
18 B
66 KQ1
67 KQ1
19 KQ1
9 KP1
14 KQ2
15 KQ2
13 KQ2
42 NQ1
43 NQ1
Q14
Front Door Courtesy Light
Switch Assembly LH
P6
Front Door Courtesy Light
Switch Assembly RH
9 A
9 B
10 A (*3)
10 B (*4)
Key Lock
Key Unlock
N16(A), (B)
Front Door Lock
with Motor Assembly LH
7 A (*3)
7 B (*4)
7 B
1 B
6 B
2 A
9 B
5 A
10 B (*5)
4 A (*6)
+B
IG
CSEL
DATA
+5
GND
12 B (*5)
1 A (*6)
Q37(A)
Door Control Receiver
Q38(B)
Tire Pressure Warning ECU
and Receiver (Door Control
and Tire Pressure Monitoring
System Receiver Assembly)
* 3 : w/ Double Locking
* 4 : w/o Double Locking
* 5 : 12 Pin Type
* 6 : Except *5
* 7 : w/ Stop & Start System
* 8 : w/o Stop & Start System
1 NQ1
QA
QB

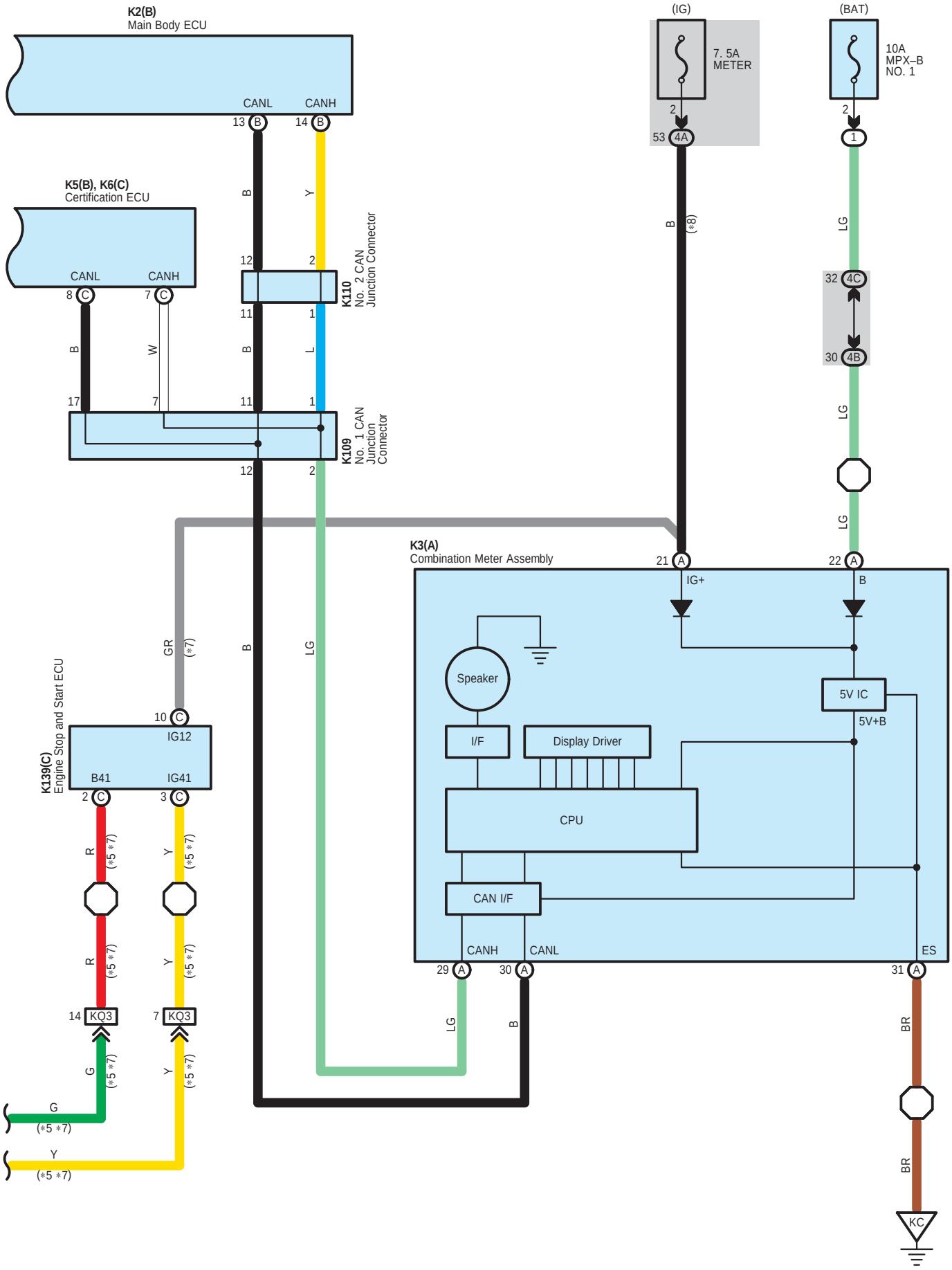
K2(B)
Main Body ECU
CANL
CANH
13 B
14 B
K5(B), K6(C)
Certification ECU
CANL
CANH
8 C
7 C
B
W
17
7
B
Y
12
2
11
1
B
L
K110
No. 2 CAN
Junction Connector
K109
No. 1 CAN
Junction
Connector
12
2
(IG)
7. 5A
METER
2
53 4A
B
(*8)
(BAT)
10A
MPX–B
NO. 1
2
1
LG
32 4C
30 4B
LG
LG
K3(A)
Combination Meter Assembly
21 A
IG+
22 A
B
Speaker
5V IC
5V+B
I/F
Display Driver
CPU
CAN I/F
CANH
CANL
ES
29 A
30 A
31 A
GR
(*7)
B
LG
K139(C)
Engine Stop and Start ECU
10 C
IG12
B41
IG41
2 C
3 C
R
(*5 *7)
Y
(*5 *7)
R
(*5 *7)
Y
(*5 *7)
14 KQ3
7 KQ3
G
(*5 *7)
Y
(*5 *7)
G
(*5 *7)
Y
(*5 *7)
LG
B
BR
BR
KC

K2
White

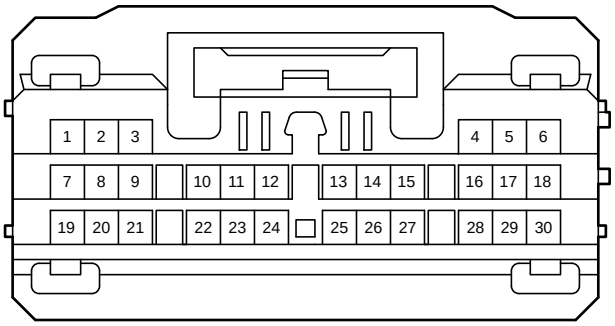

90980-12909

K3
Black

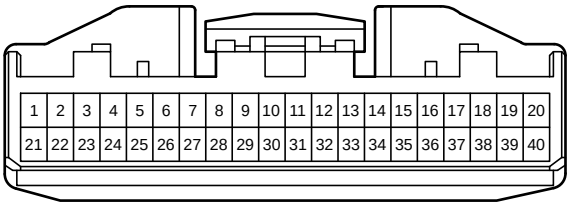

90980-12557

K5
Black

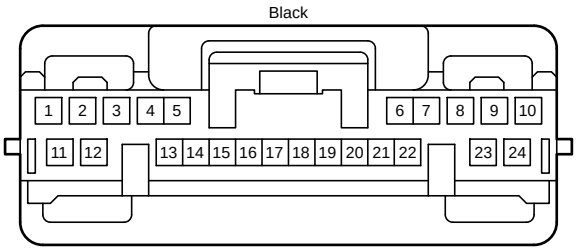

90980-12912

K6
Black

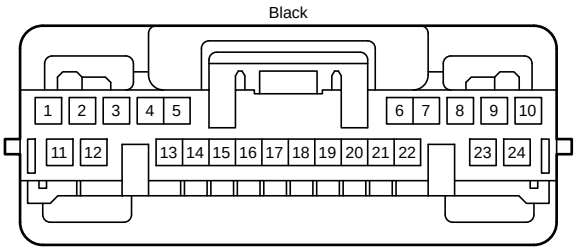

90980-12A42

K109
White

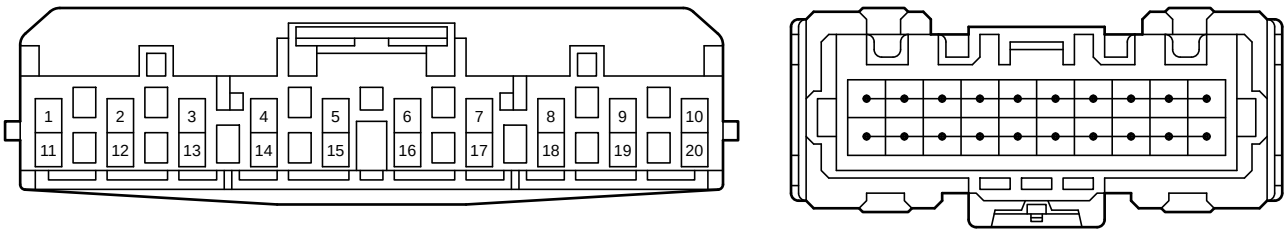

90980-12A58

K110
White

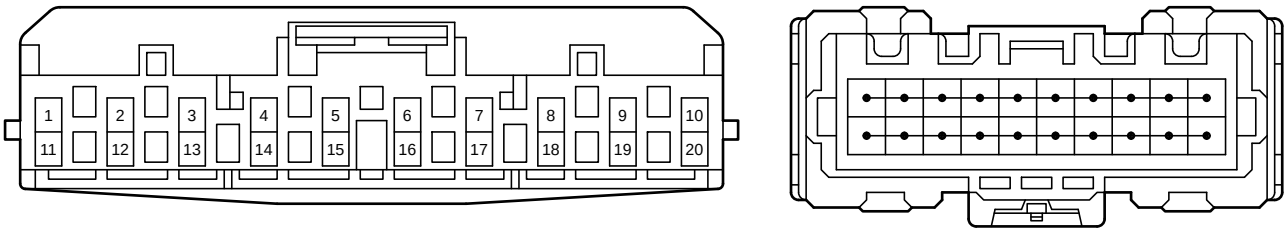

90980-12A58

K139
Black

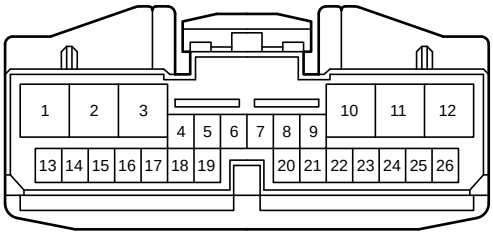

82824-12510

N2
White

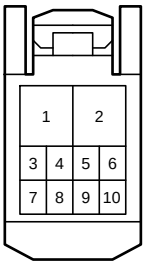

90980-12328

N4
White

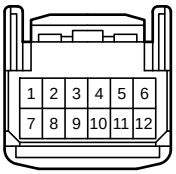

90980-12552
(Before Aug. 2015 Production)

N4
Gray

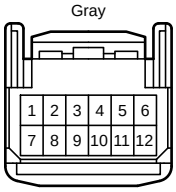

90980-12552
(From Aug. 2015 Production)

N16
White

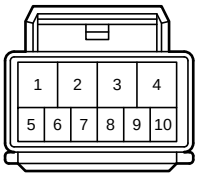

90980-12226

N17
White

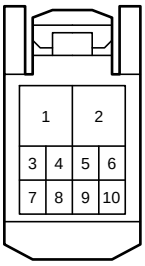

90980-12328

N18
White

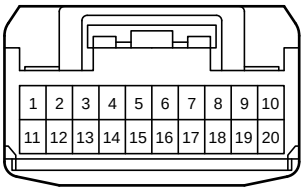

90980-12460

N27
Black

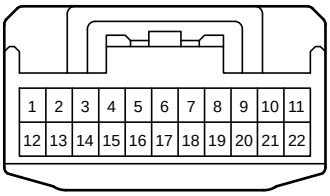

90980-12372

N30
White

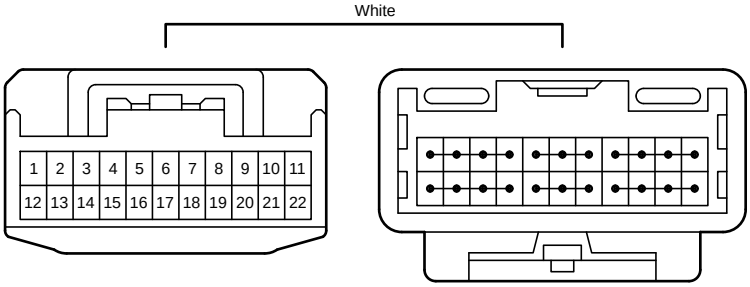

90980-12372

O2
White

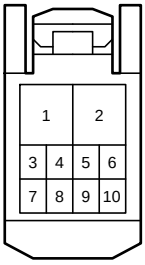

90980-12328

O3
White

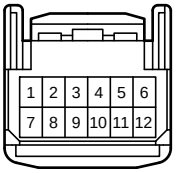

90980-12552
(Before Aug. 2015 Production)

O3
Gray

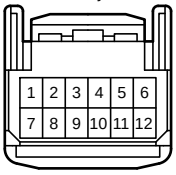

90980-12552
(From Aug. 2015 Production)

O7
White

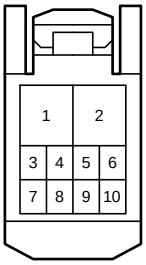

90980-12328

O8
White

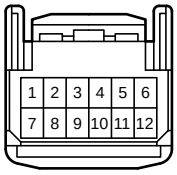

90980-12552
(Before Aug. 2015 Production)

O8
Gray

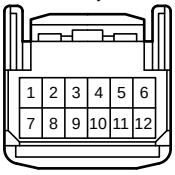

90980-12552
(From Aug. 2015 Production)

P6
Black

90980-10871

Q14
Black

90980-10871

Q37
White

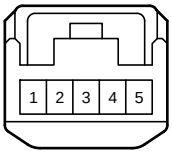

90980-12366

Q38
White

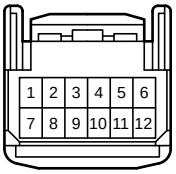

90980-12552

4A
White

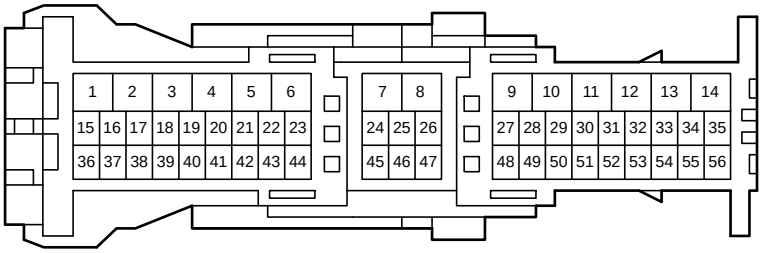

90980-12943

4B
White

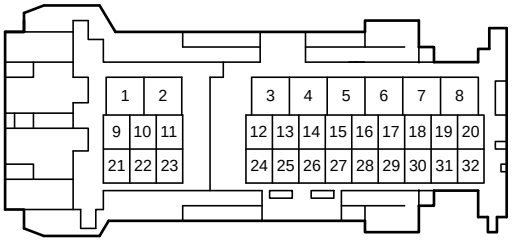

90980-12A48

4C
White

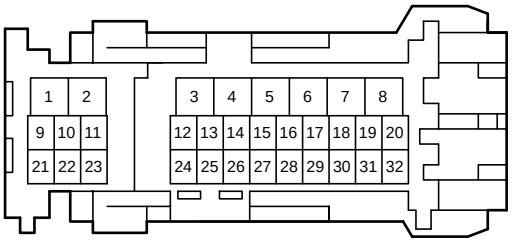

90980-12A47

4D
White

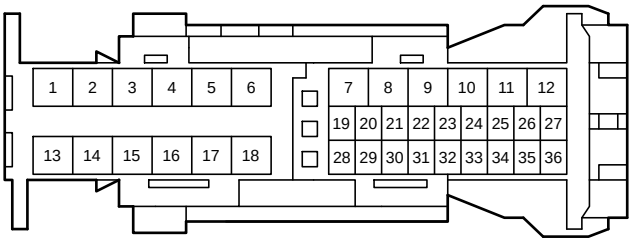

90980-12944

KP1
White

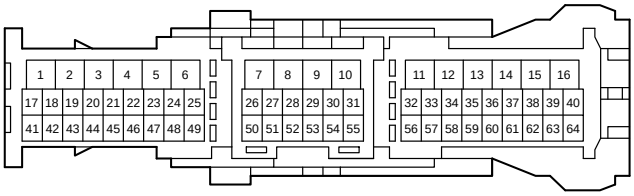

90980-12774

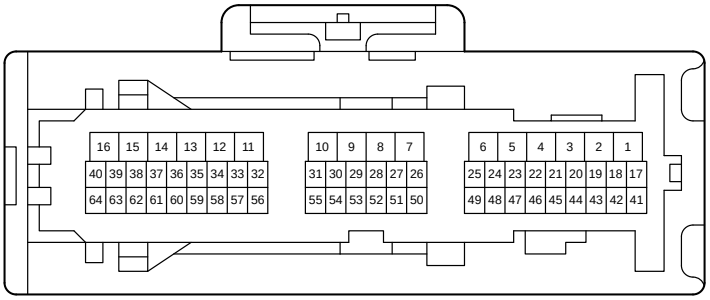

90980-12798

KQ1
White

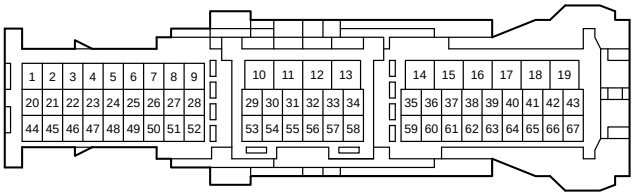

90980-12783

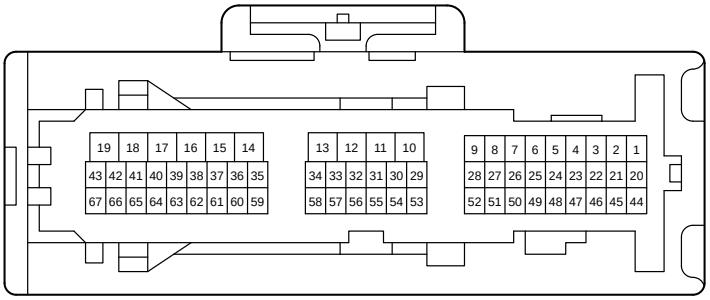

90980-12800

KQ2
White

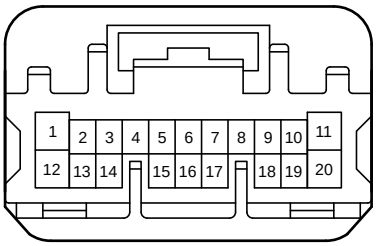

90980-12741

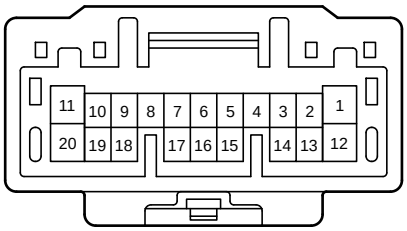

90980-12740

KQ3
White

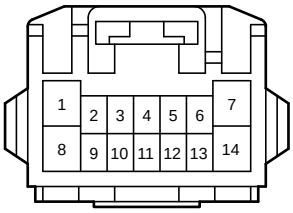

82824-53090

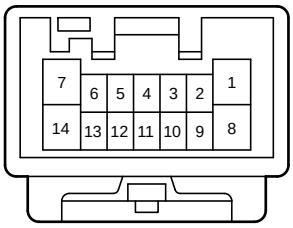

82824-53080

NP1
Yellow

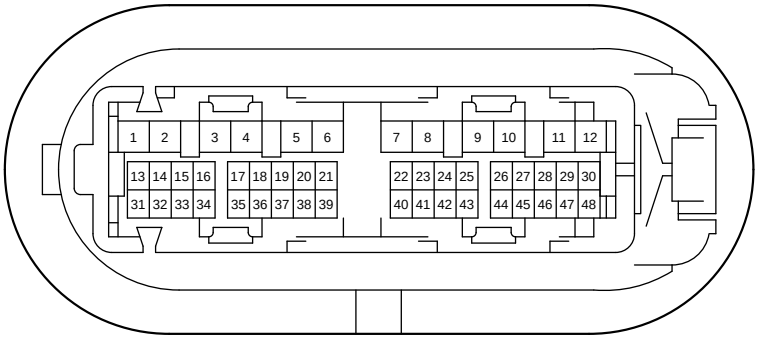

90980-12A09

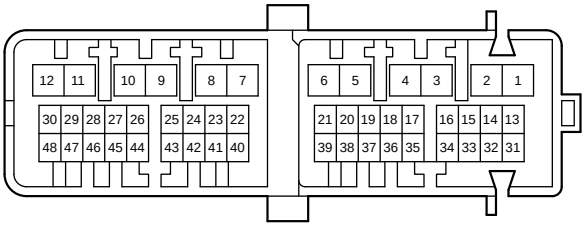

90980-12A06

NQ1
Yellow

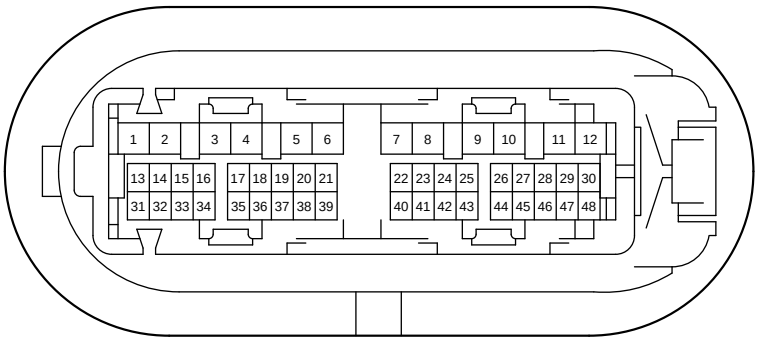

90980-12A09

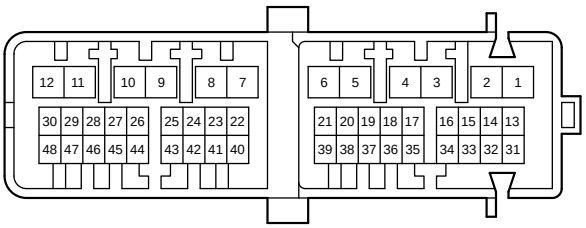

90980-12A06

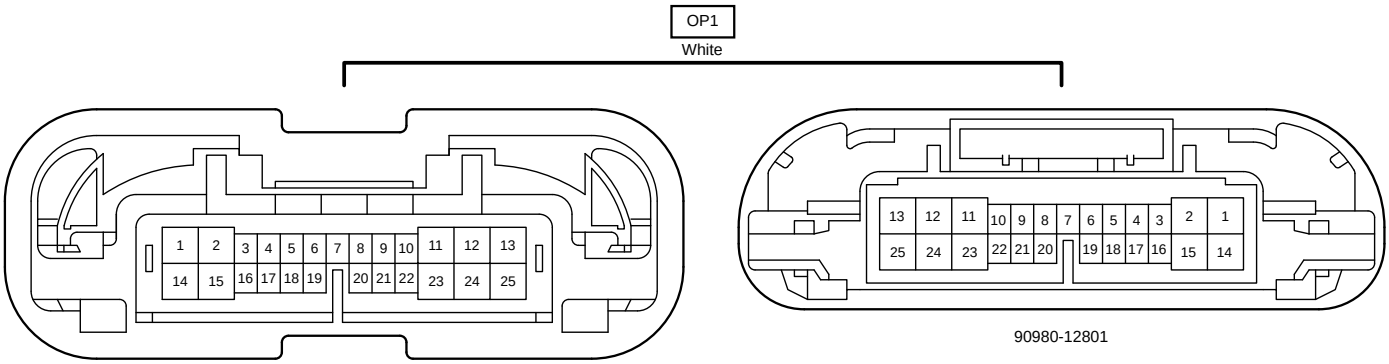

90980-12802

90980-12801

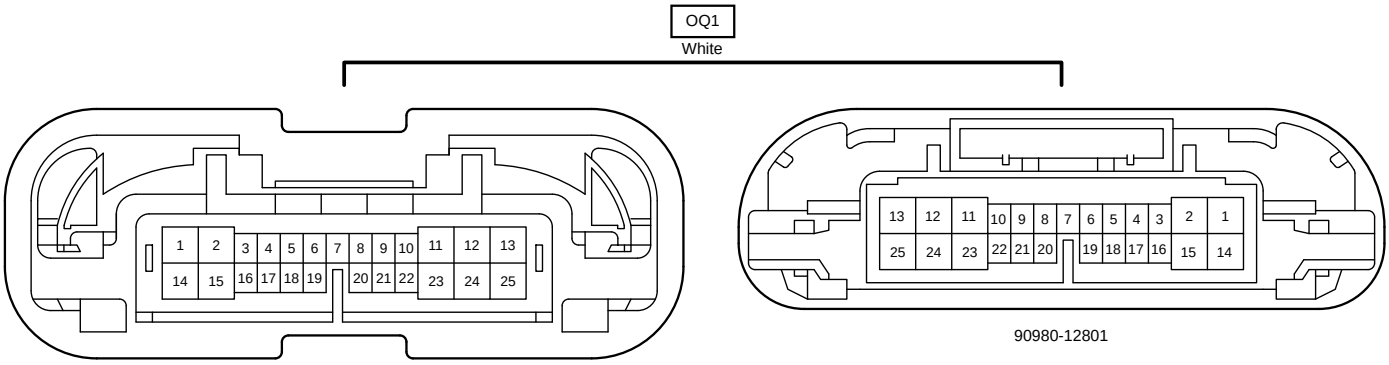

90980-12802

90980-12801