[Cowl Side J/B RH Inner Circuit]

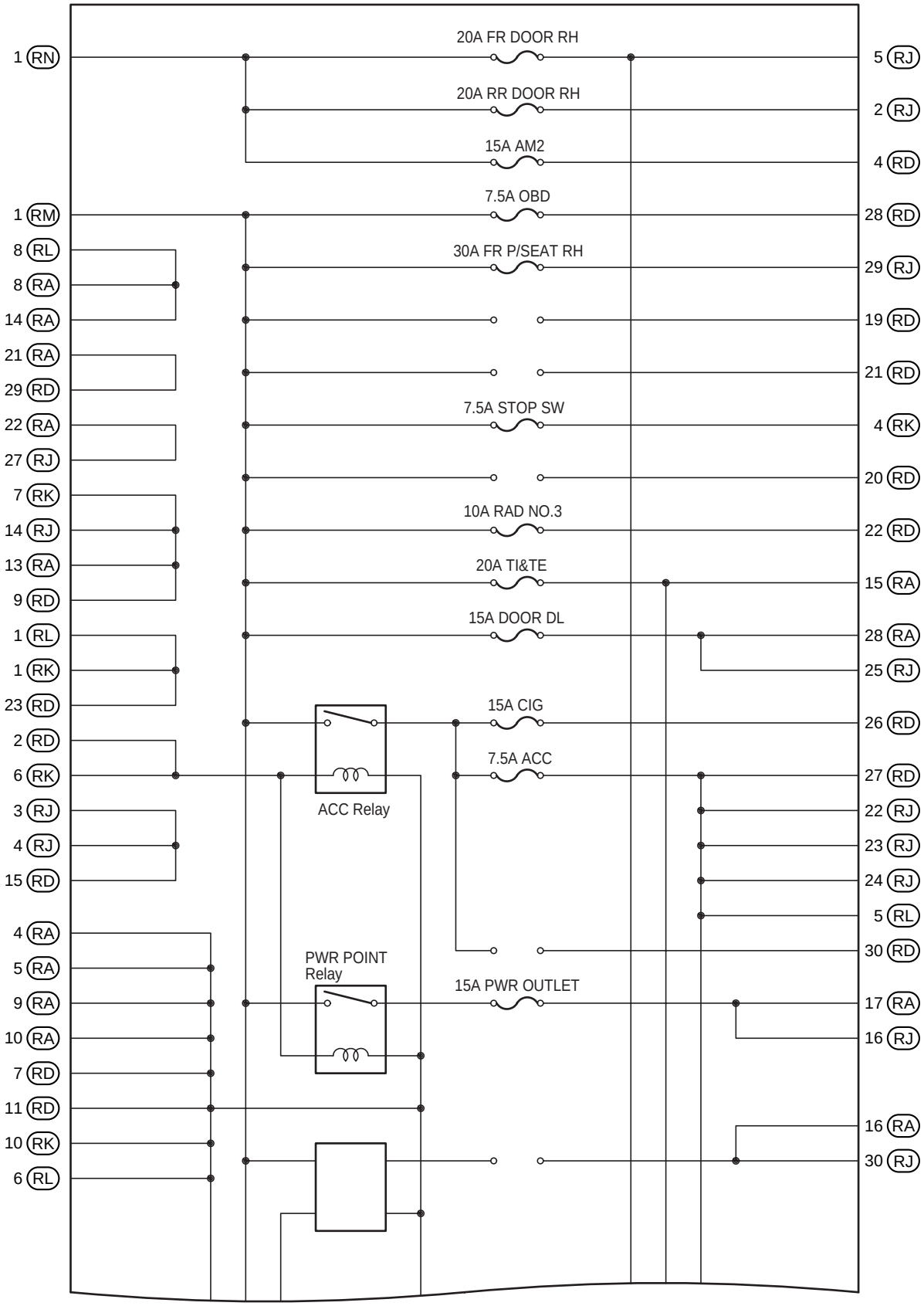

(Cont. Next Page)

(Cont'd)

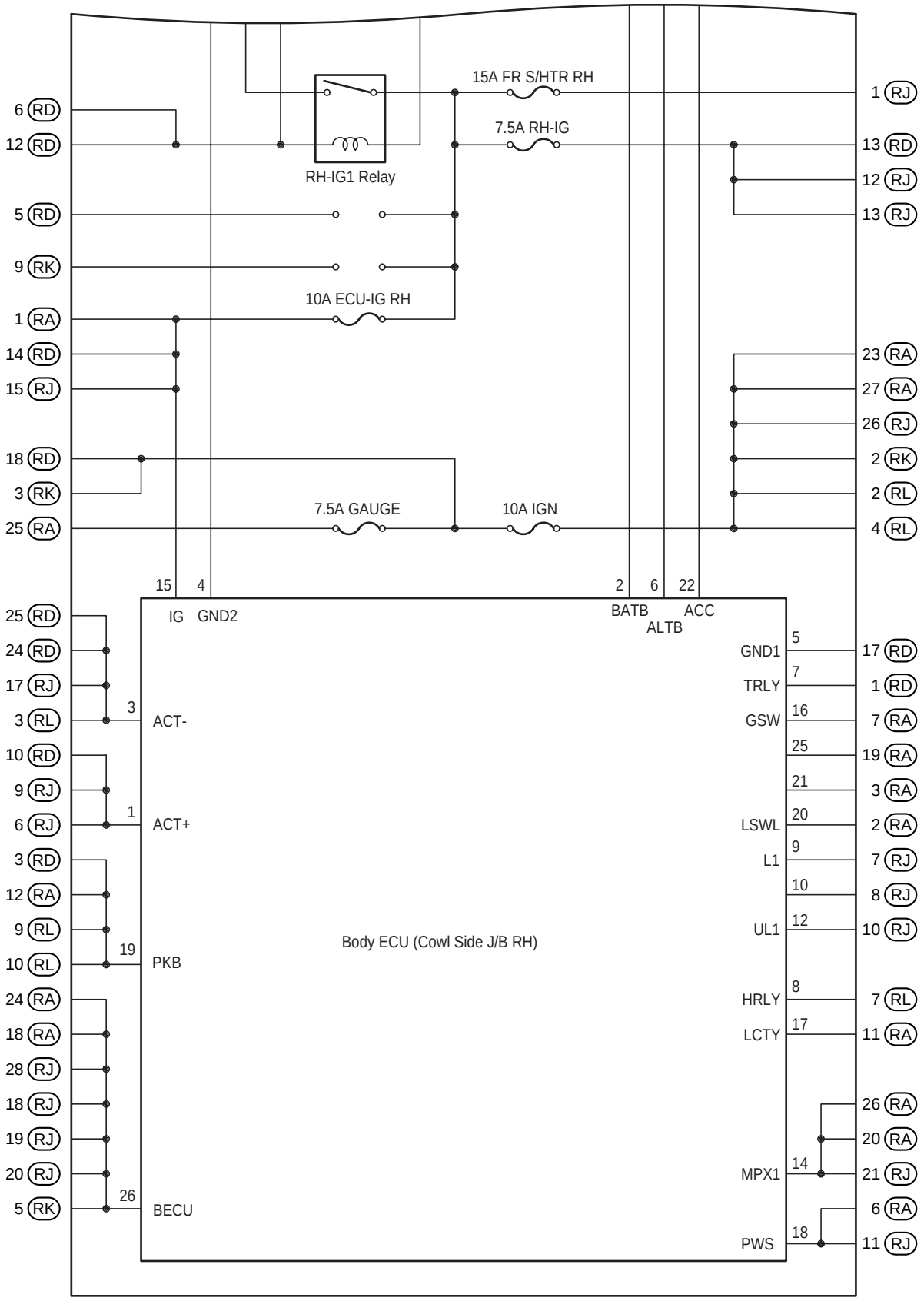
15A FR S/HTR RH
7.5A RH-IG
RH-IG1 Relay
10A ECU-IG RH
7.5A GAUGE
10A IGN
6 RD
12 RD
5 RD
9 RK
1 RA
14 RD
15 RJ
18 RD
3 RK
25 RA
1 RJ
13 RD
12 RJ
13 RJ
23 RA
27 RA
26 RJ
2 RK
2 RL
4 RL
15
4
2
6
22
IG
GND2
BATB
ALTB
ACC
25 RD
24 RD
17 RJ
3 RL
10 RD
9 RJ
6 RJ
3 RD
12 RA
9 RL
10 RL
24 RA
18 RA
28 RJ
18 RJ
19 RJ
20 RJ
5 RK
3
ACT-
1
ACT+
19
PKB
26
BECU
Body ECU (Cowl Side J/B RH)
5
GND1
7
TRLY
16
GSW
25
21
20
LSWL
9
L1
10
12
UL1
8
HRLY
17
LCTY
14
MPX1
18
PWS
17 RD
1 RD
7 RA
19 RA
3 RA
2 RA
7 RJ
8 RJ
10 RJ
7 RL
11 RA
26 RA
20 RA
21 RJ
6 RA
11 RJ