(Cont. next page)

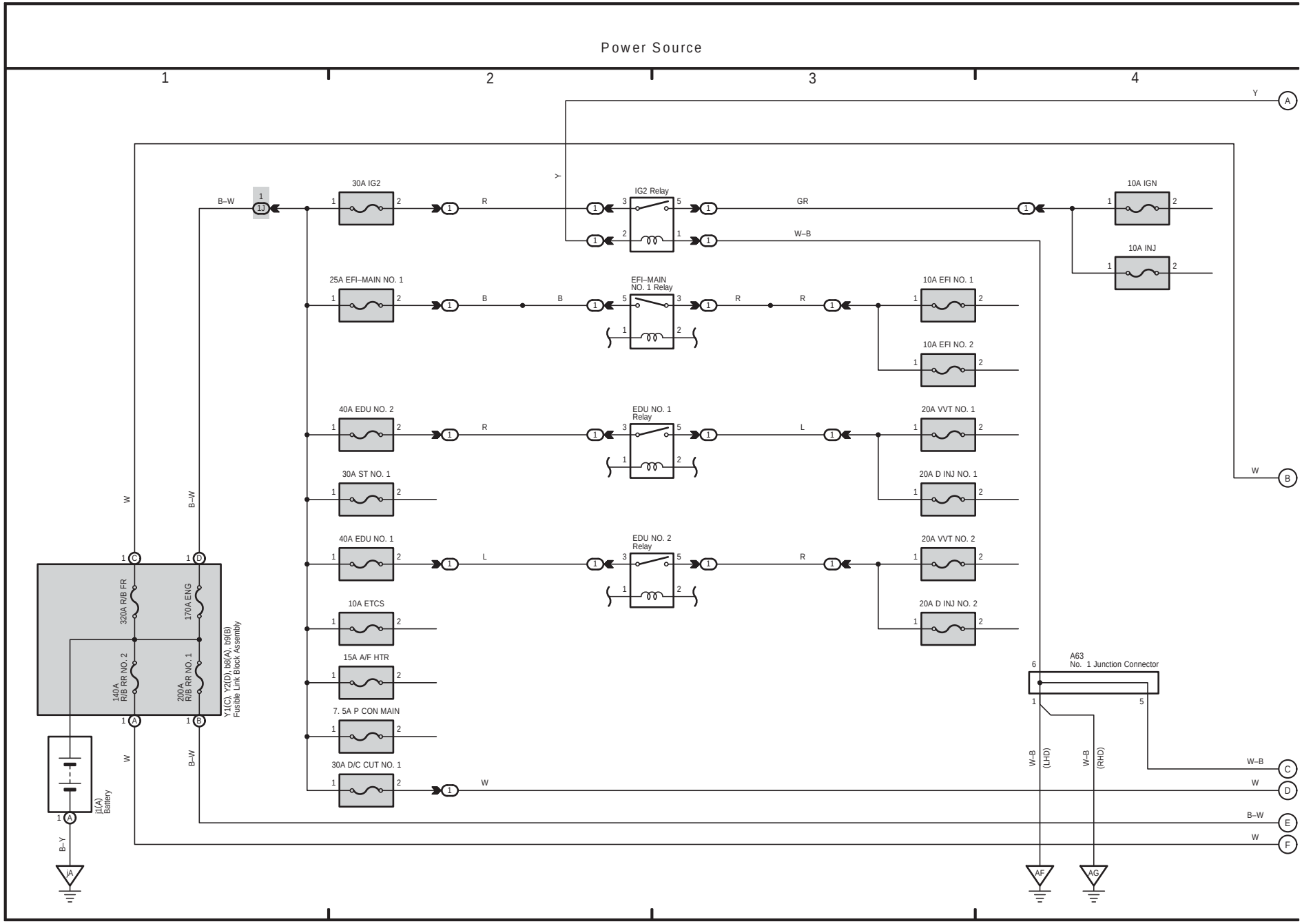

(Cont. next page)

Power Source

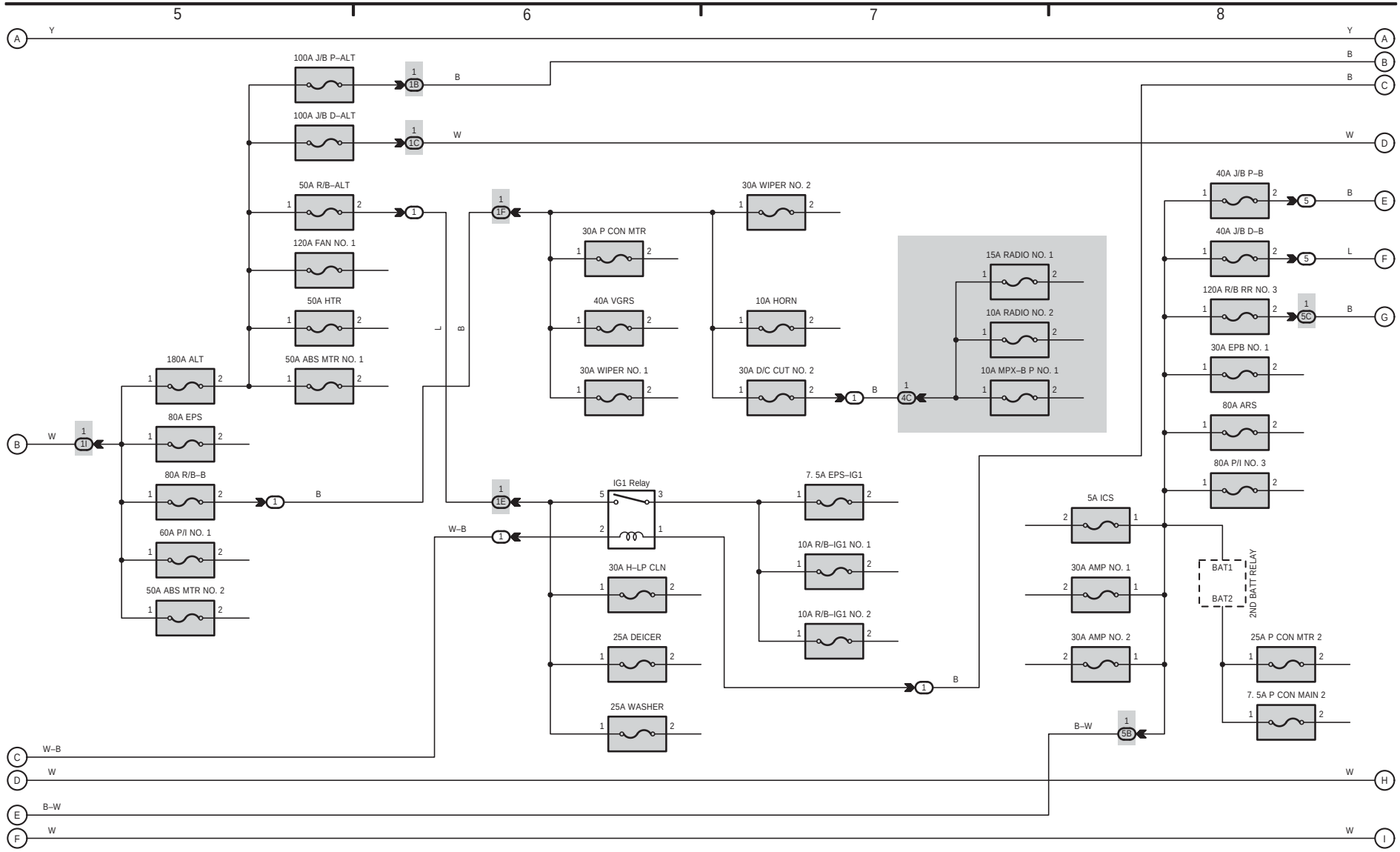

(Cont. next page)

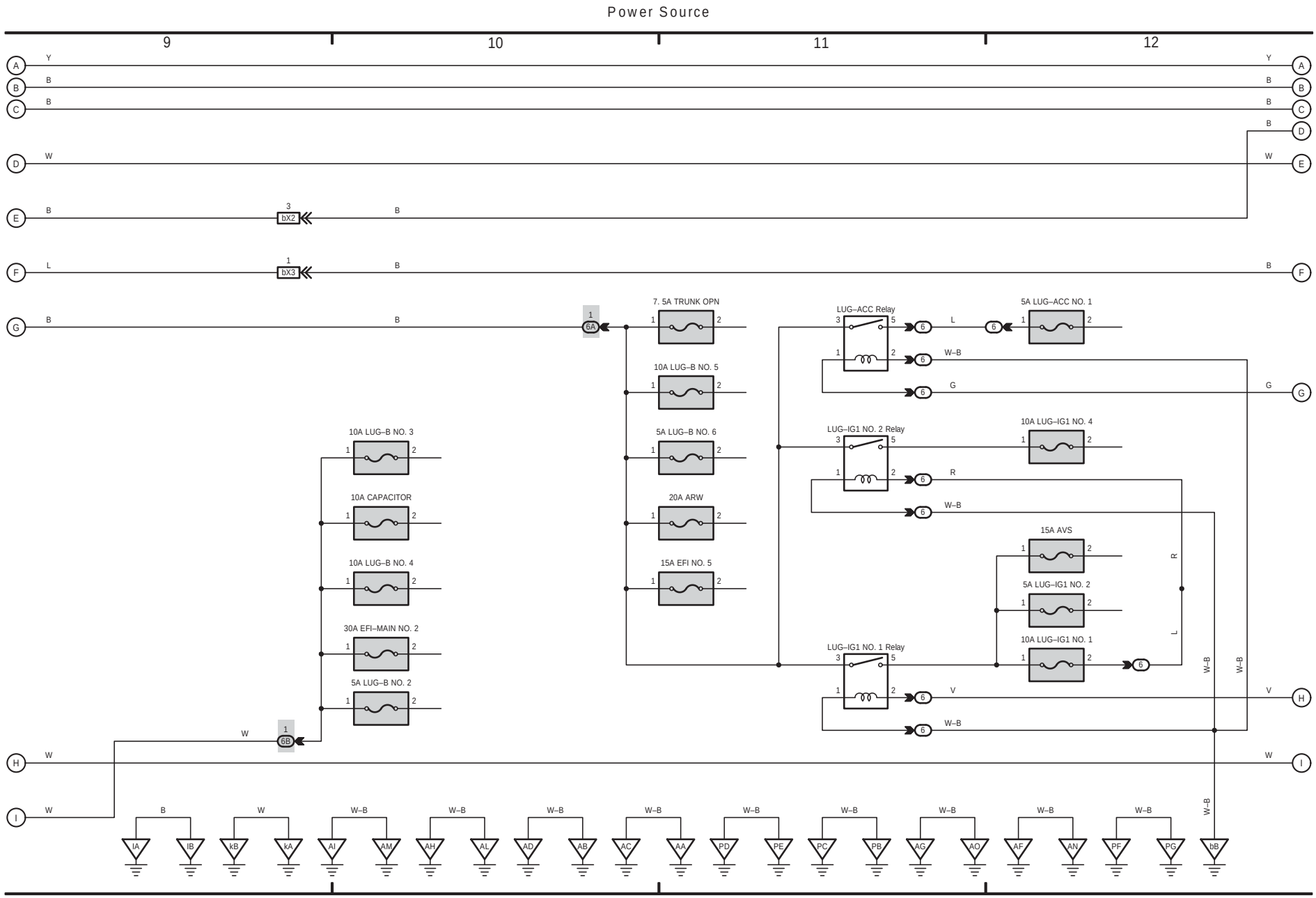

(Cont. next page)

Power Source

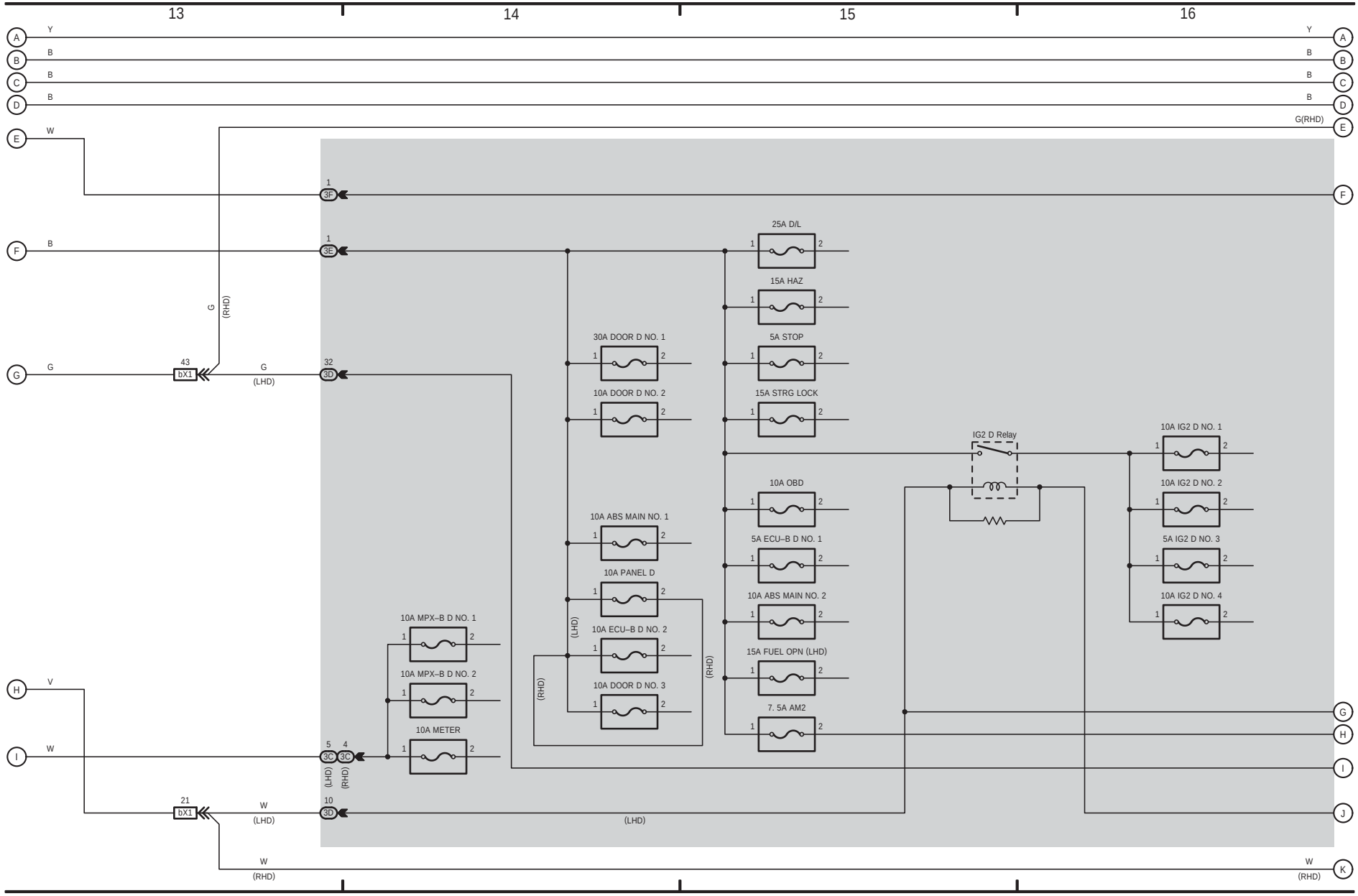

(Cont. next page)

Power Source

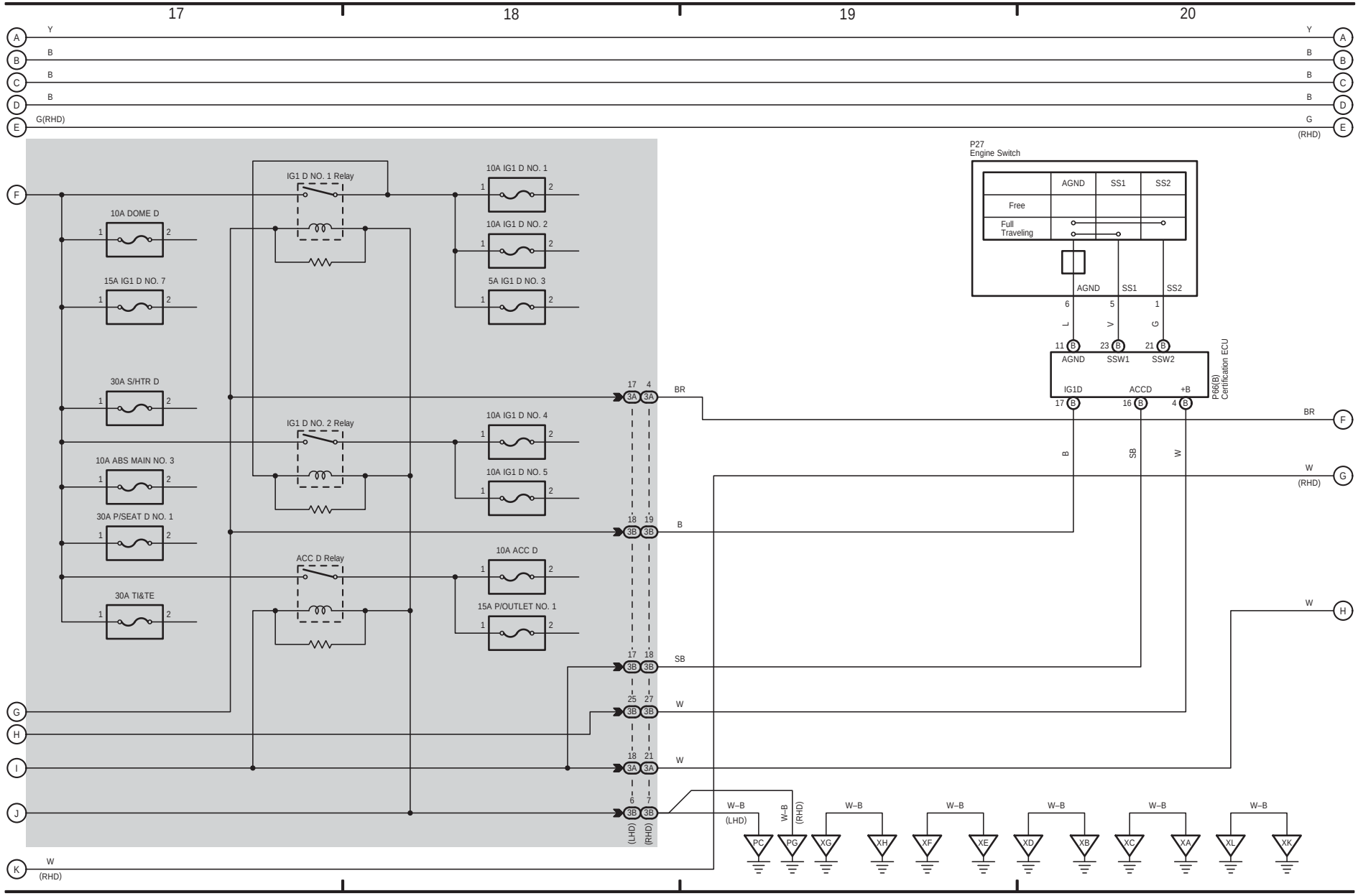

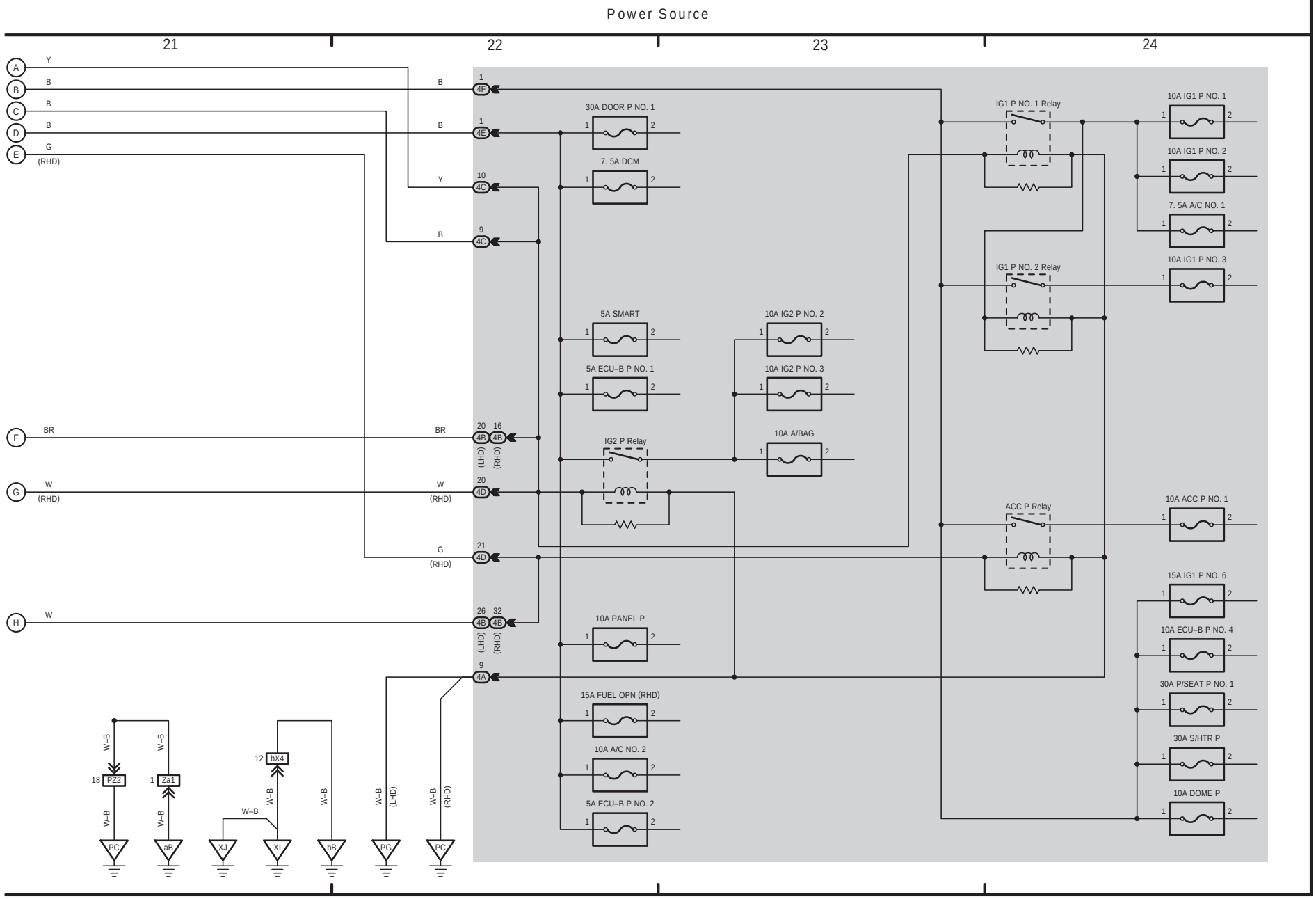
Power Source
21
22
23
24
A
B
C
D
E
F
G
H
Y
B
G
(RHD)
BR
W
(RHD)
W
1
4F
4E
10
4C
9
4C
20
16
4B
4B
(LHD)
(RHD)
20
4D
21
4D
26
32
4B
4B
9
4A
30A DOOR P NO. 1
7. 5A DCM
5A SMART
5A ECU–B P NO. 1
IG2 P Relay
10A PANEL P
15A FUEL OPN (RHD)
10A A/C NO. 2
5A ECU–B P NO. 2
10A IG2 P NO. 2
10A IG2 P NO. 3
10A A/BAG
IG1 P NO. 1 Relay
IG1 P NO. 2 Relay
ACC P Relay
10A IG1 P NO. 1
10A IG1 P NO. 2
7. 5A A/C NO. 1
10A IG1 P NO. 3
10A ACC P NO. 1
15A IG1 P NO. 6
10A ECU–B P NO. 4
30A P/SEAT P NO. 1
30A S/HTR P
10A DOME P
W–B
18
PZ2
1
Za1
12
bX4
PC
aB
XJ
XI
bB
PG
PC