(Cont. next page)

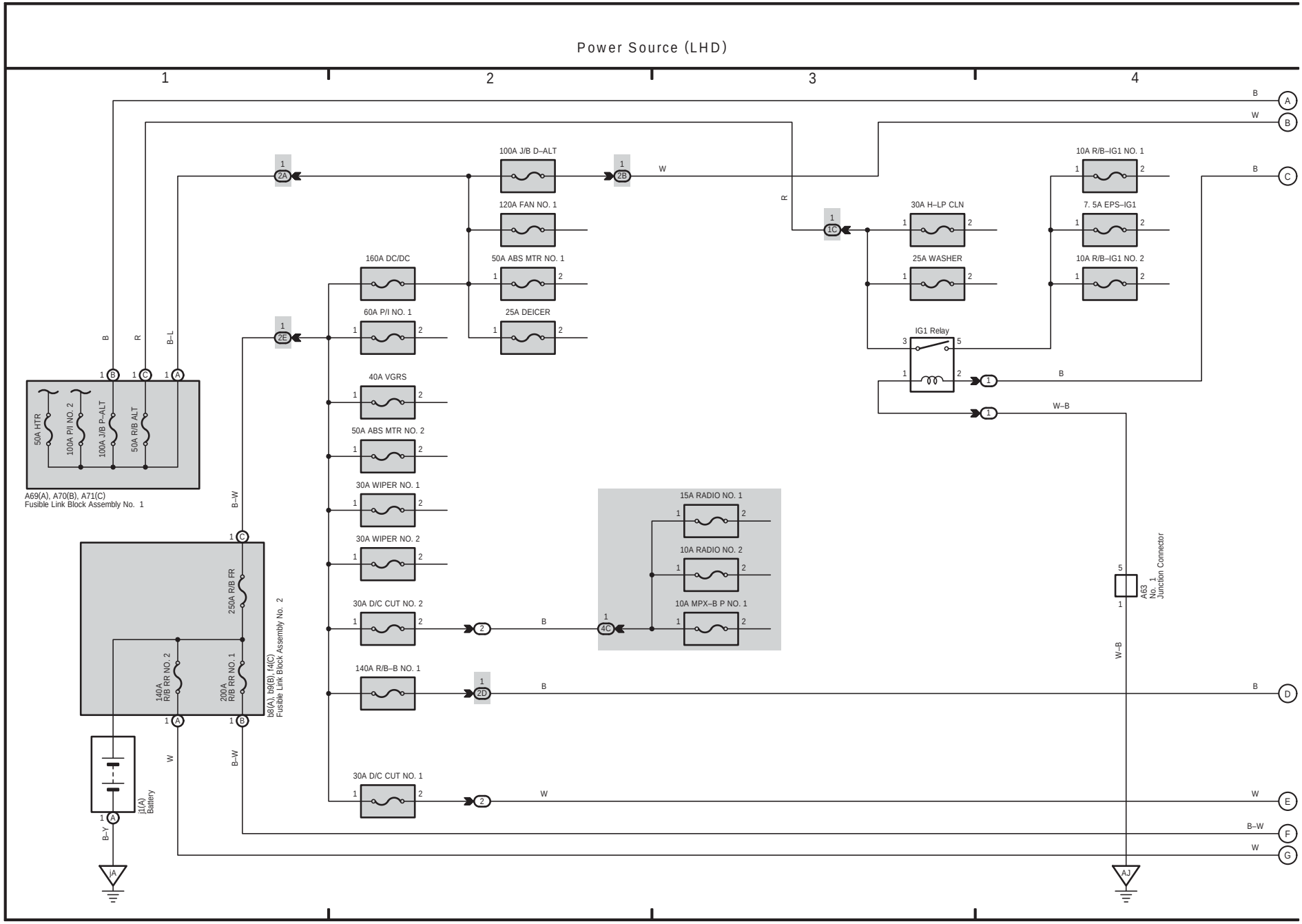

(Cont. next page)

Power Source (LHD)

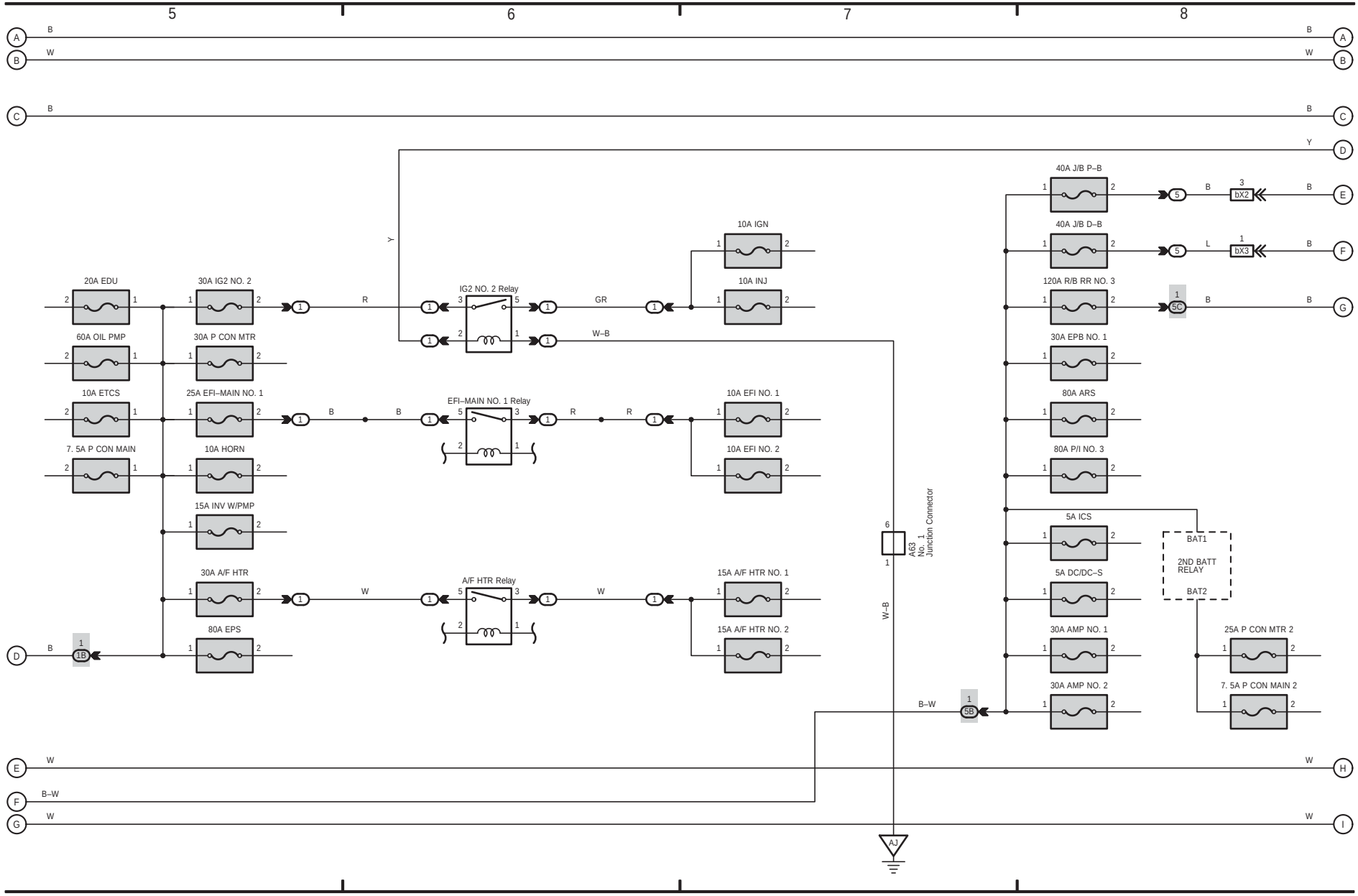

(Cont. next page)

Power Source (LHD)

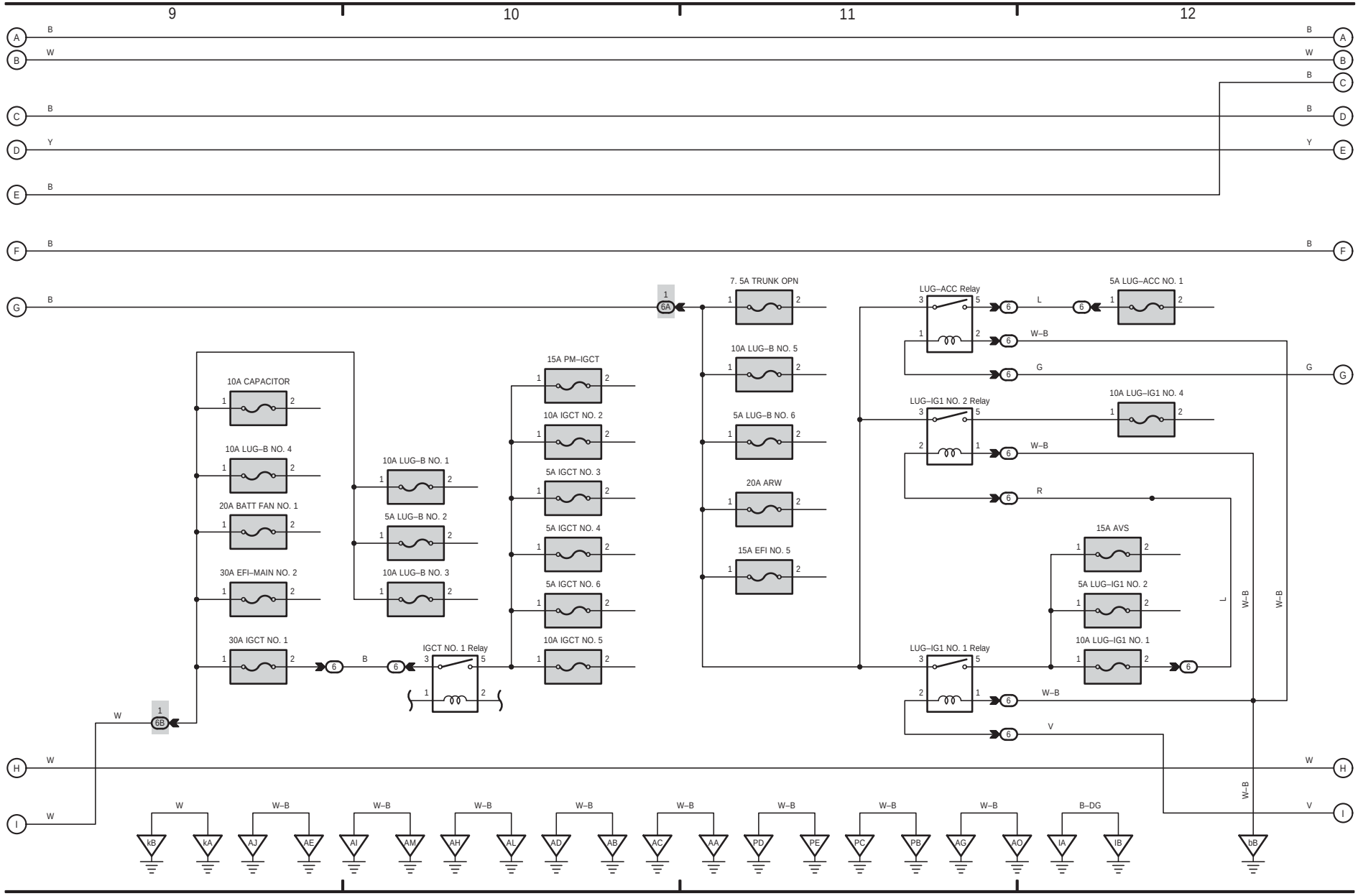

(Cont. next page)

Power Source (LHD)

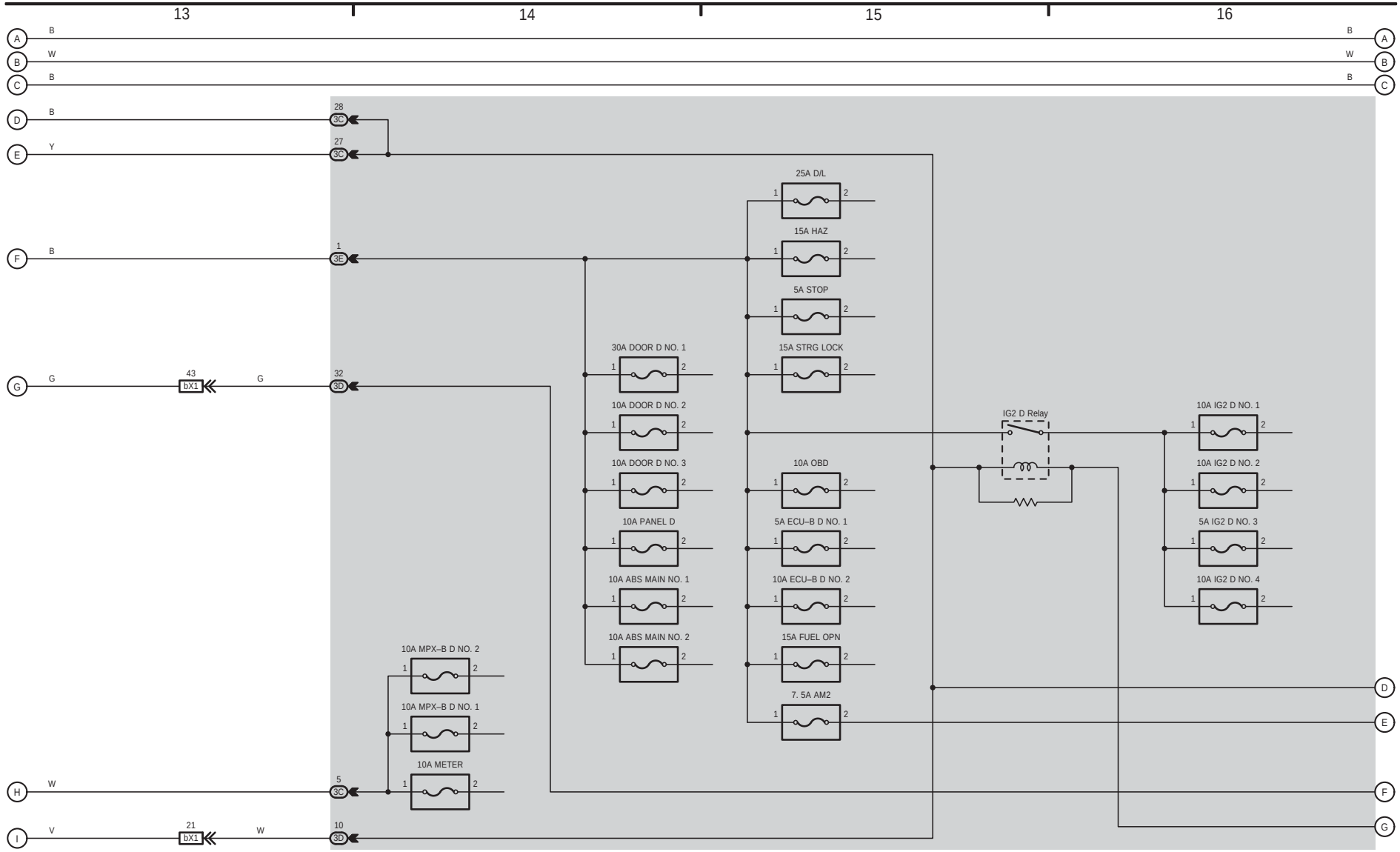

(Cont. next page)

Power Source (LHD)

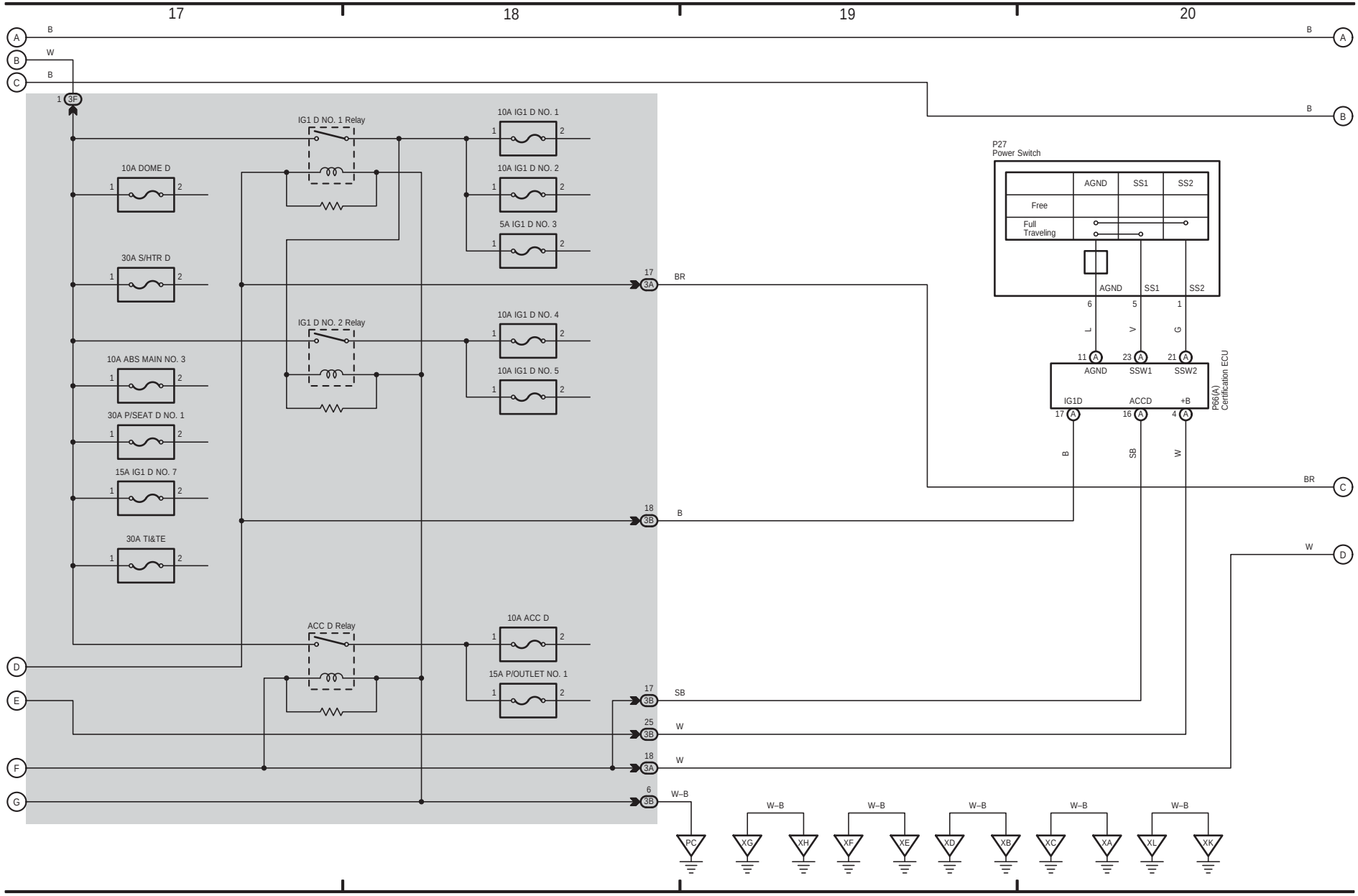

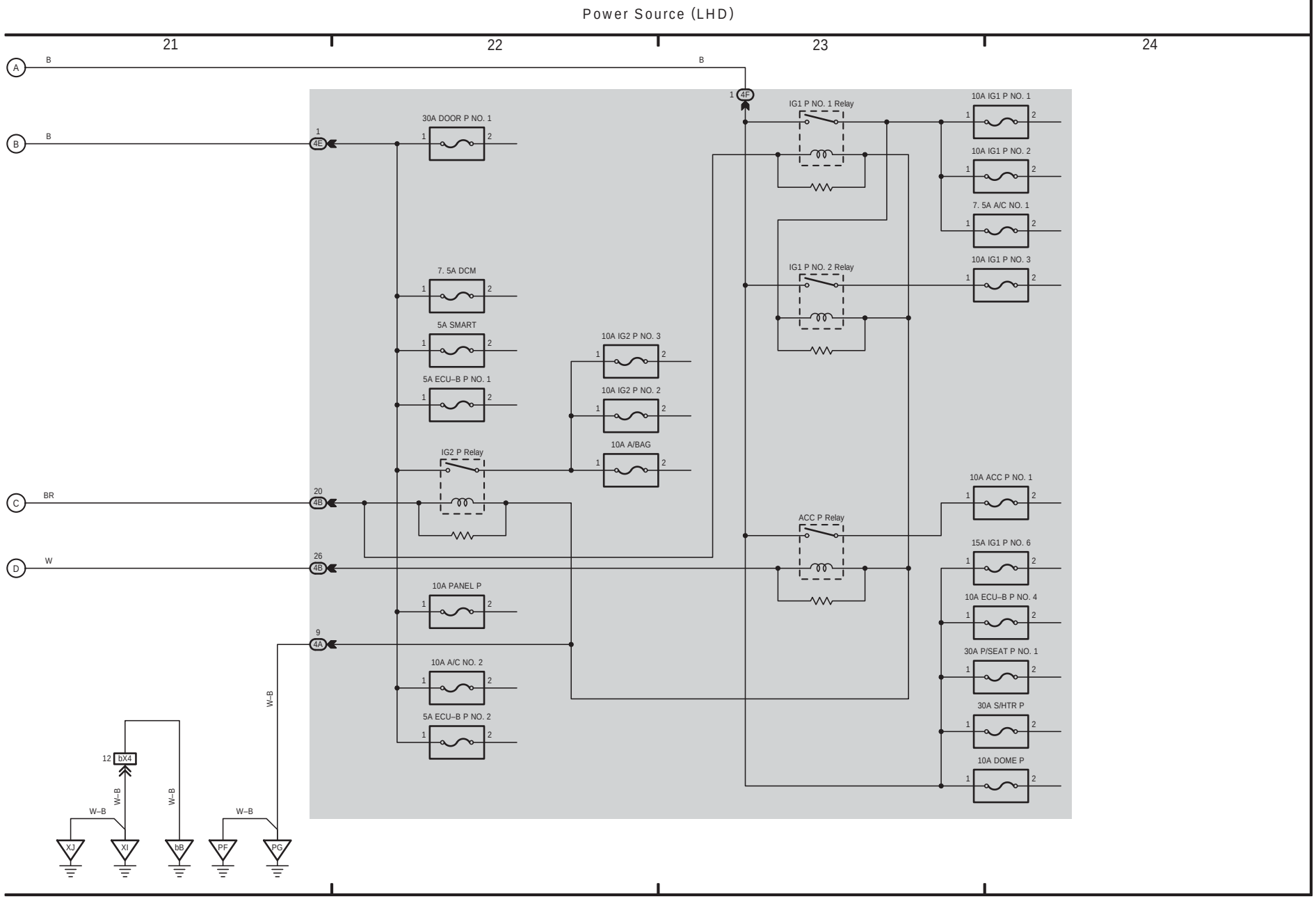
Power Source (LHD)
21
22
23
24
A
B
C
D
BR
W
1 4E
20 4B
26 4B
9 4A
1 4F
30A DOOR P NO. 1
7. 5A DCM
5A SMART
5A ECU–B P NO. 1
IG2 P Relay
10A IG2 P NO. 3
10A IG2 P NO. 2
10A A/BAG
10A PANEL P
10A A/C NO. 2
5A ECU–B P NO. 2
IG1 P NO. 1 Relay
IG1 P NO. 2 Relay
ACC P Relay
10A IG1 P NO. 1
10A IG1 P NO. 2
7. 5A A/C NO. 1
10A IG1 P NO. 3
10A ACC P NO. 1
15A IG1 P NO. 6
10A ECU–B P NO. 4
30A P/SEAT P NO. 1
30A S/HTR P
10A DOME P
12 bX4
W–B
XJ
XI
bB
PF
PG