[Passenger Side J/B Inner Circuit]
(LHD)

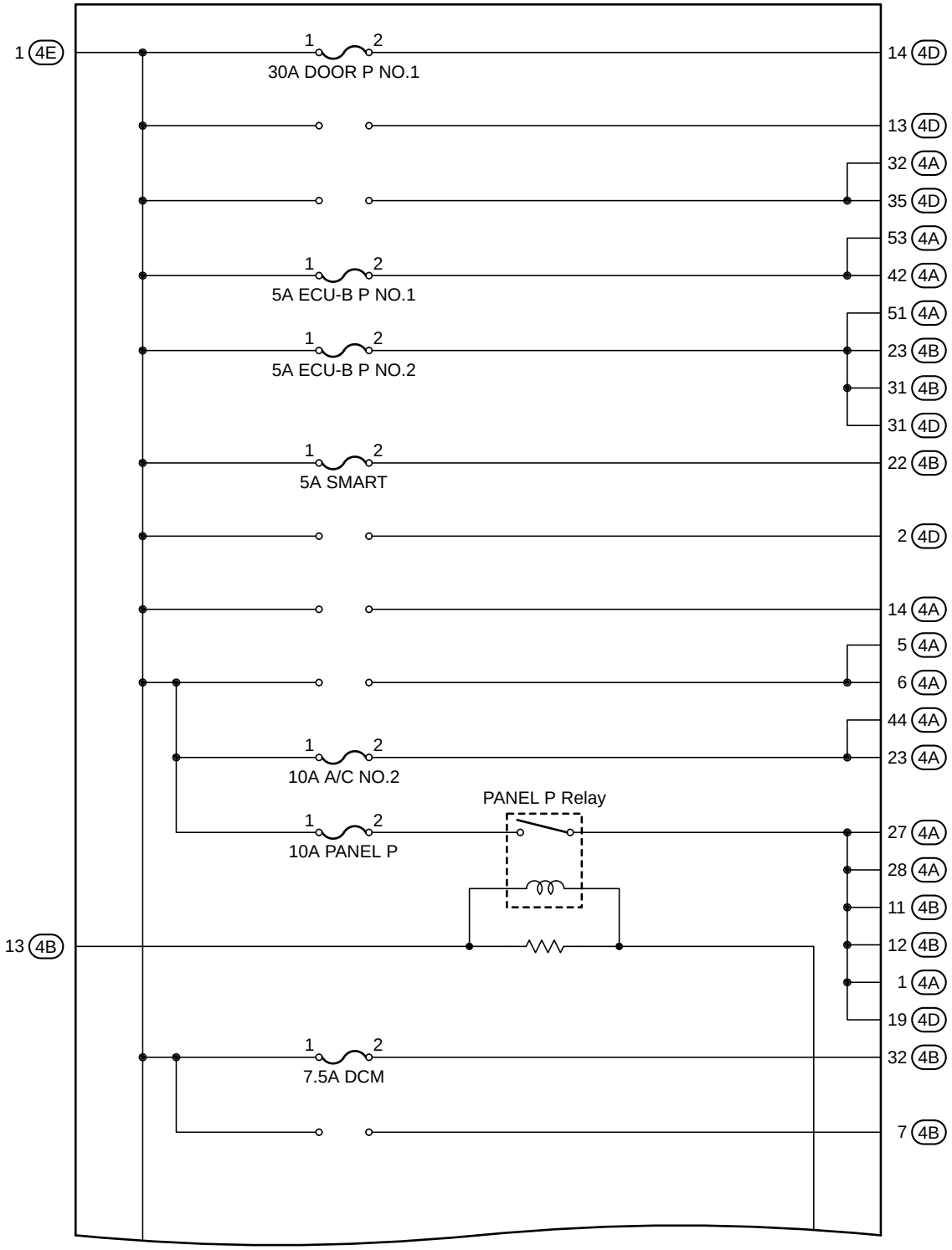

(Cont. Next Page)

[Passenger Side J/B Inner Circuit]

(Cont'd)

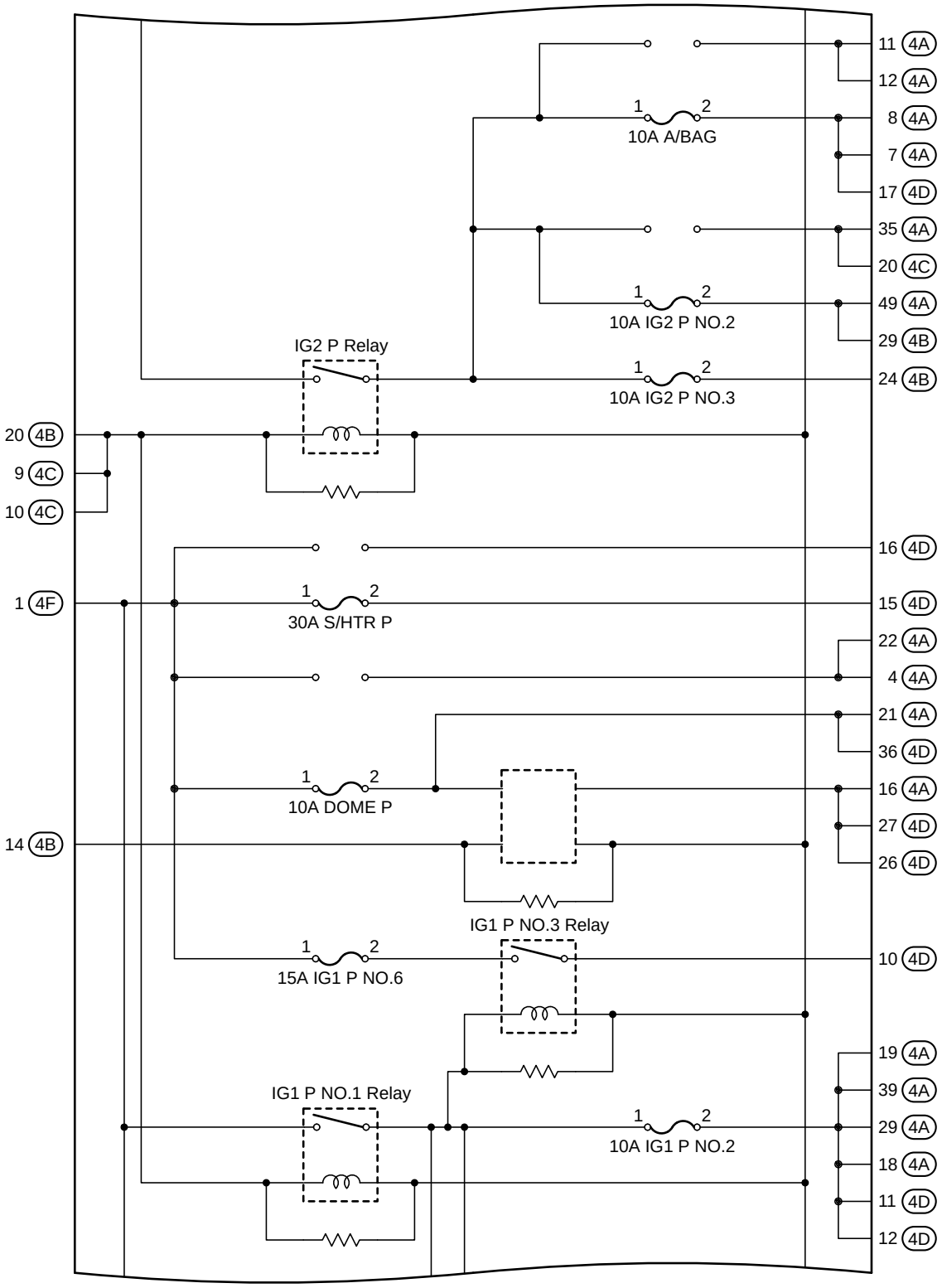

(Cont. Next Page)

[Passenger Side J/B Inner Circuit]
(LHD)

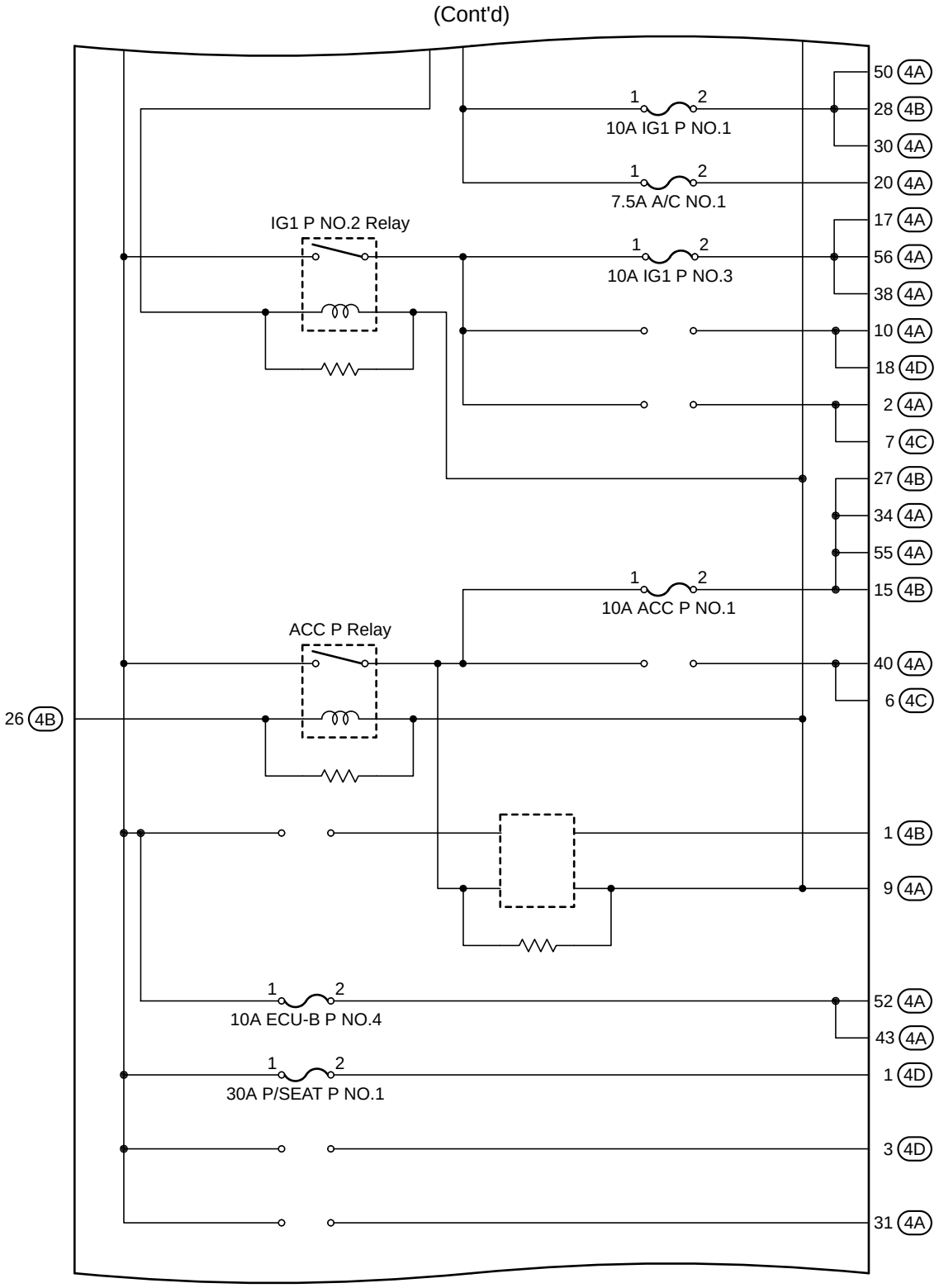

(Cont. Next Page)

[Passenger Side J/B Inner Circuit]

(Cont'd)

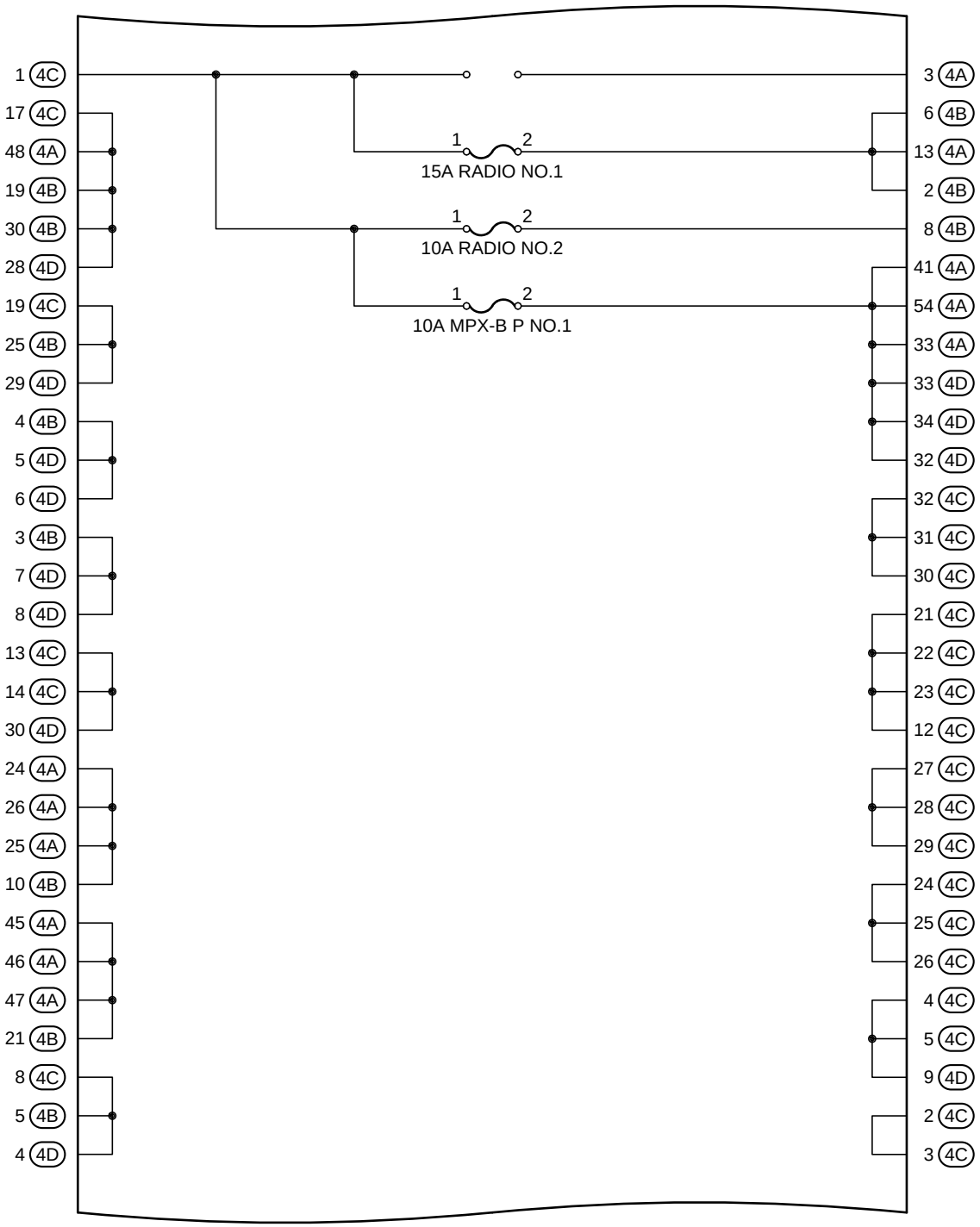

(Cont. Next Page)

[Passenger Side J/B Inner Circuit]
(LHD)

(Cont'd)

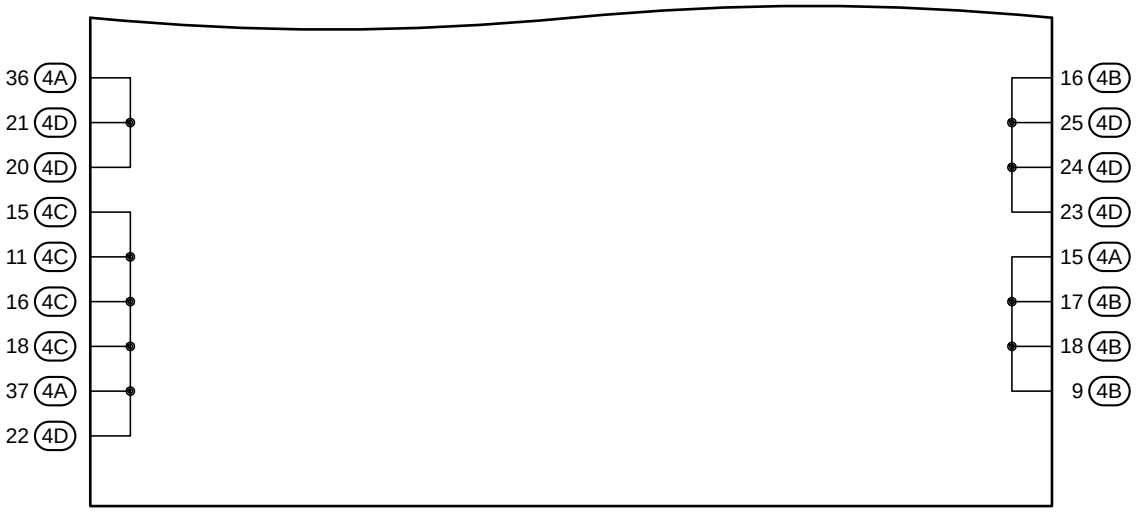

[Passenger Side J/B Inner Circuit]
(RHD)

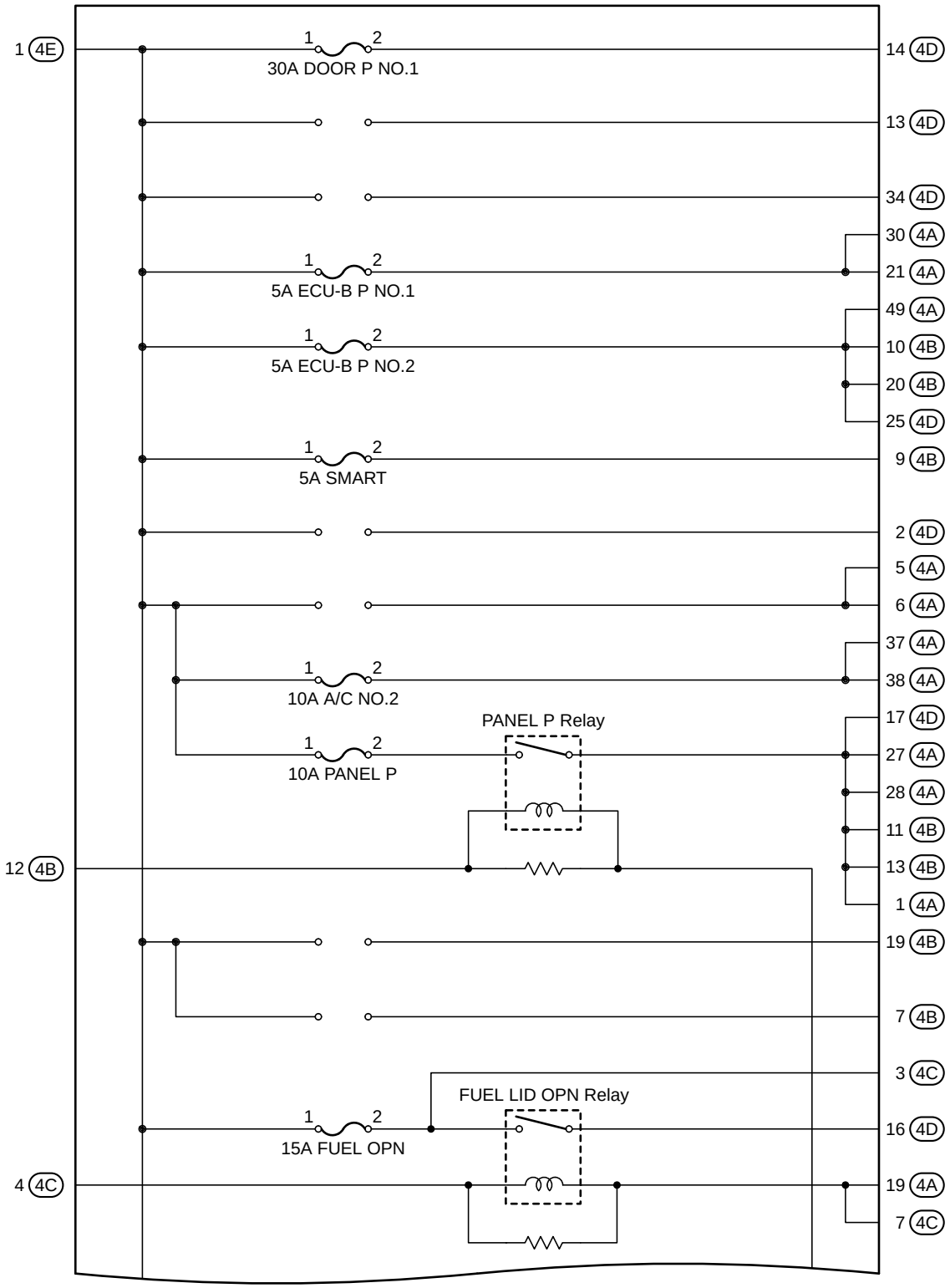

(Cont. Next Page)

[Passenger Side J/B Inner Circuit]

(Cont'd)

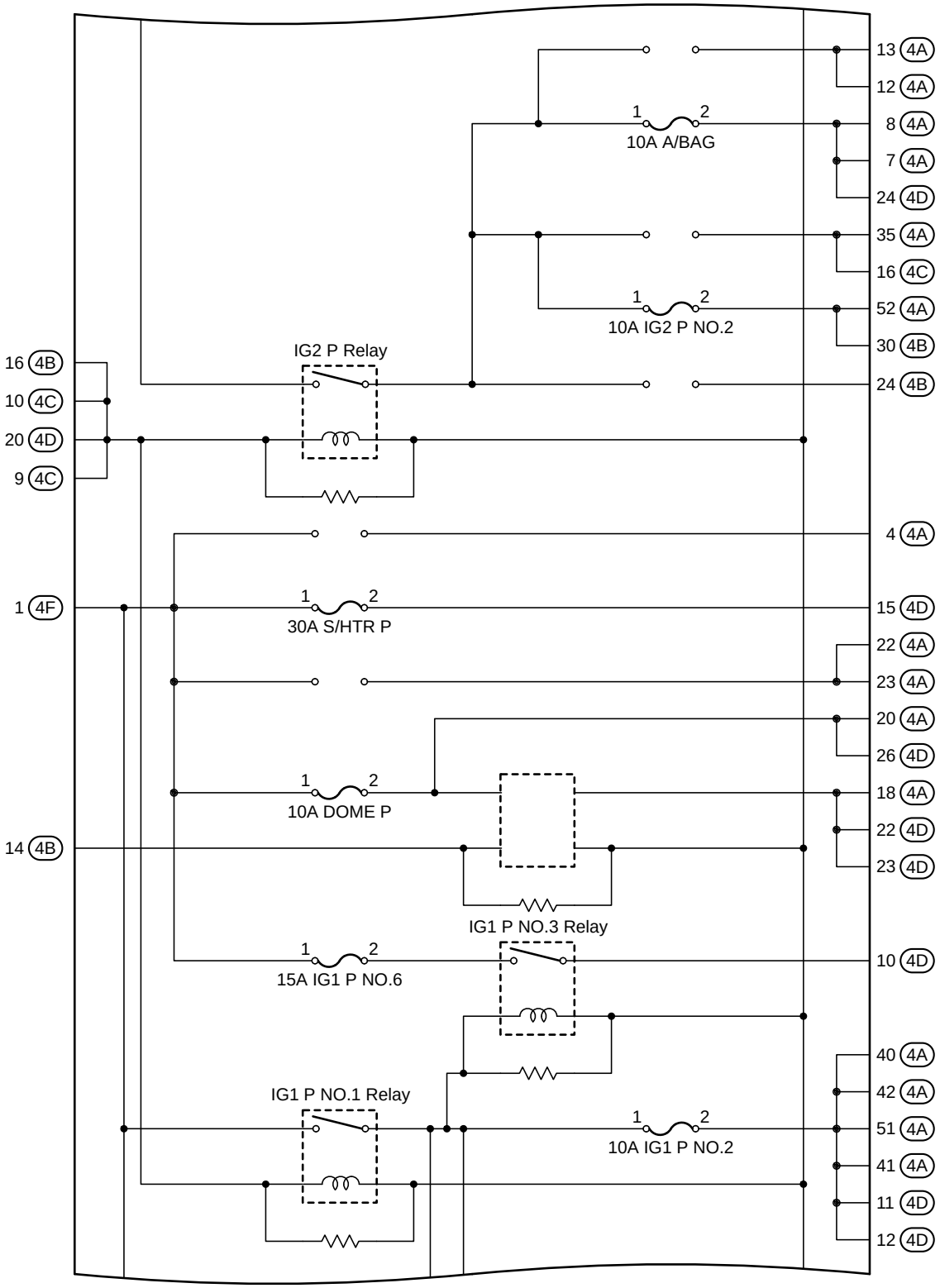

(Cont. Next Page)

[Passenger Side J/B Inner Circuit]
(RHD)

(Cont'd)

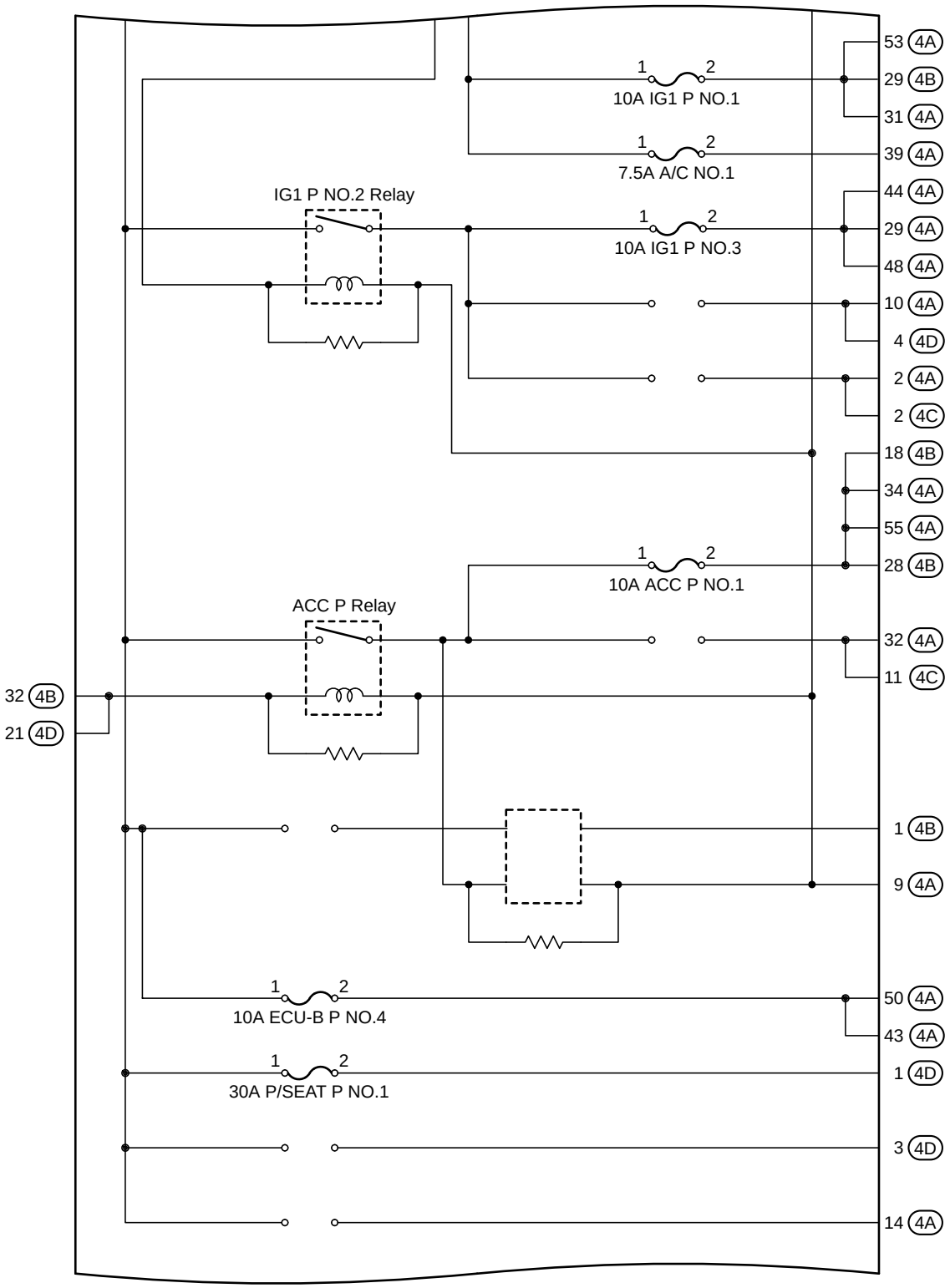

(Cont. Next Page)

[Passenger Side J/B Inner Circuit]

(Cont'd)

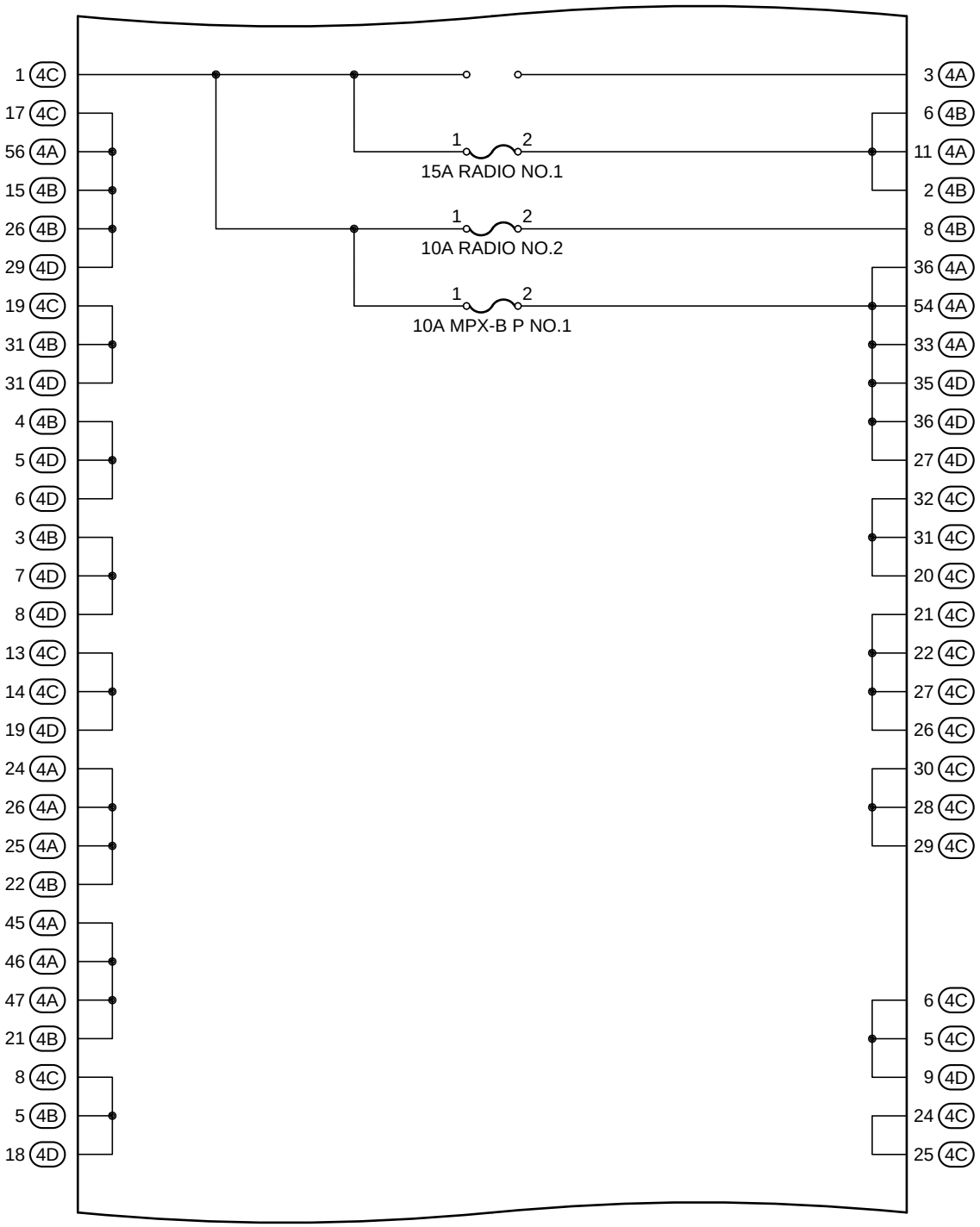

(Cont. Next Page)

[Passenger Side J/B Inner Circuit]
(RHD)
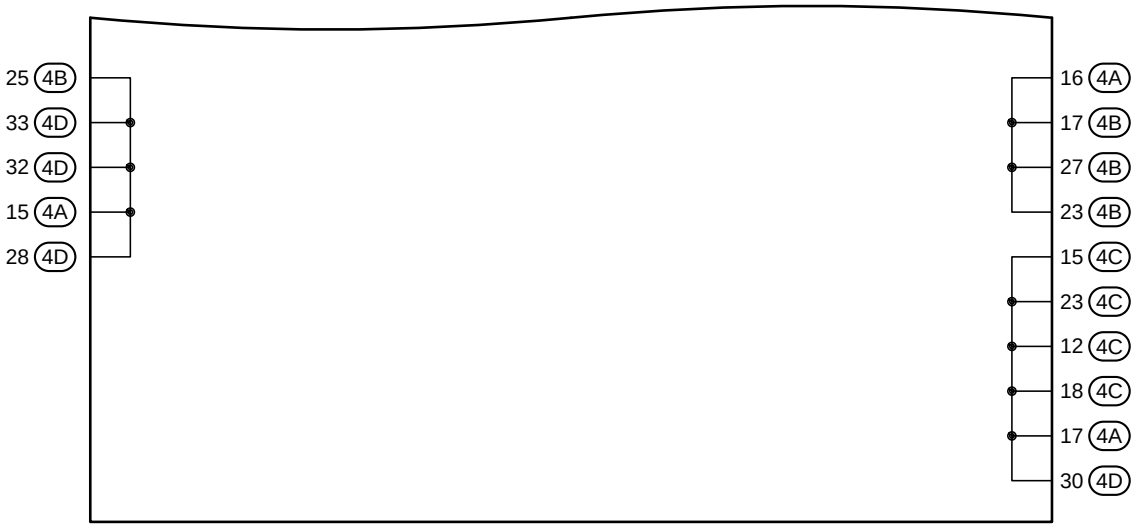
(Cont'd)