(Cont. next page)

Vehicle Dynamics Integrated Management and Brake Hold System (From Sep. 2012 Production)

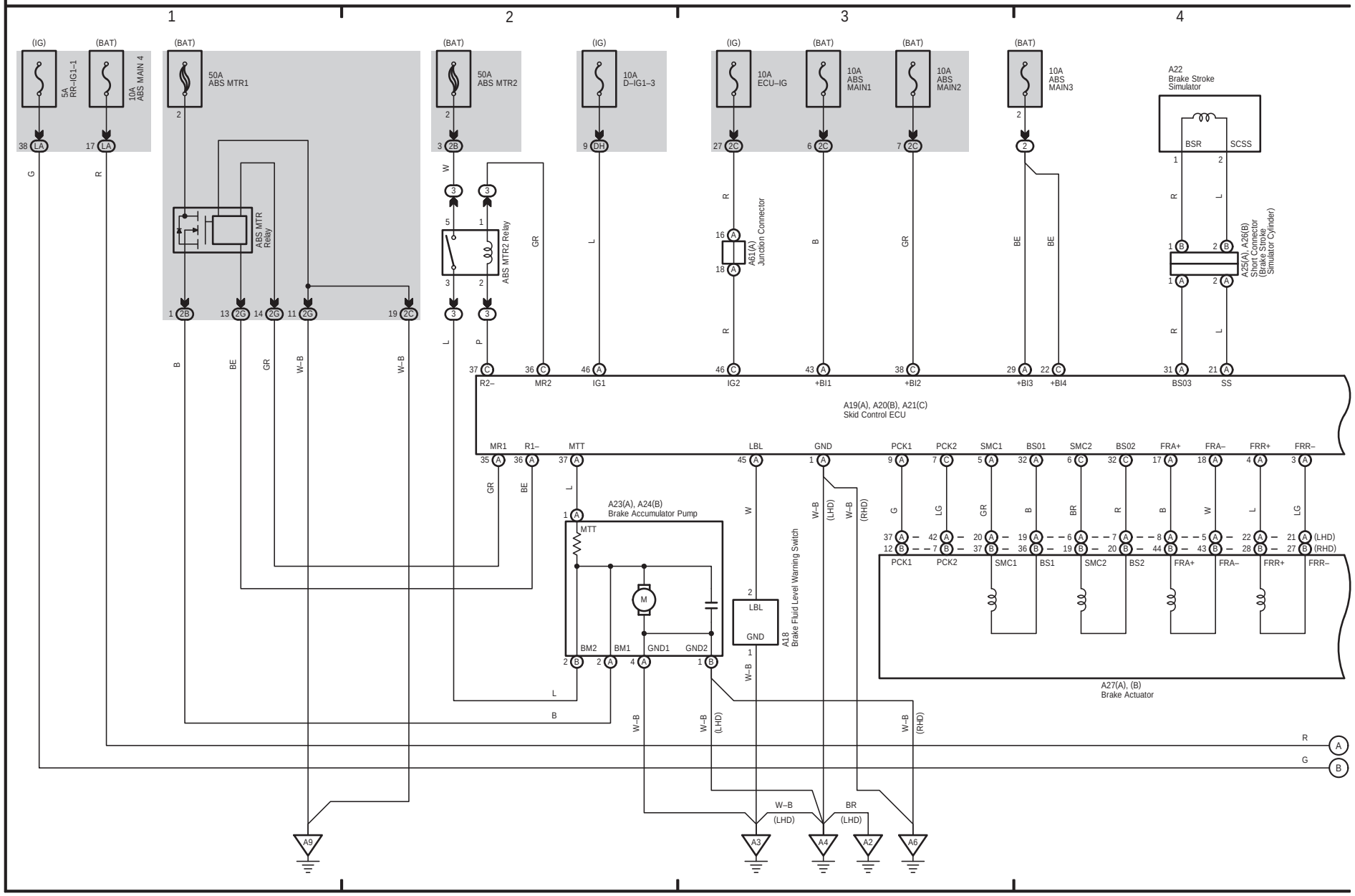

(Cont. next page)

Vehicle Dynamics Integrated Management and Brake Hold System (From Sep. 2012 Production)

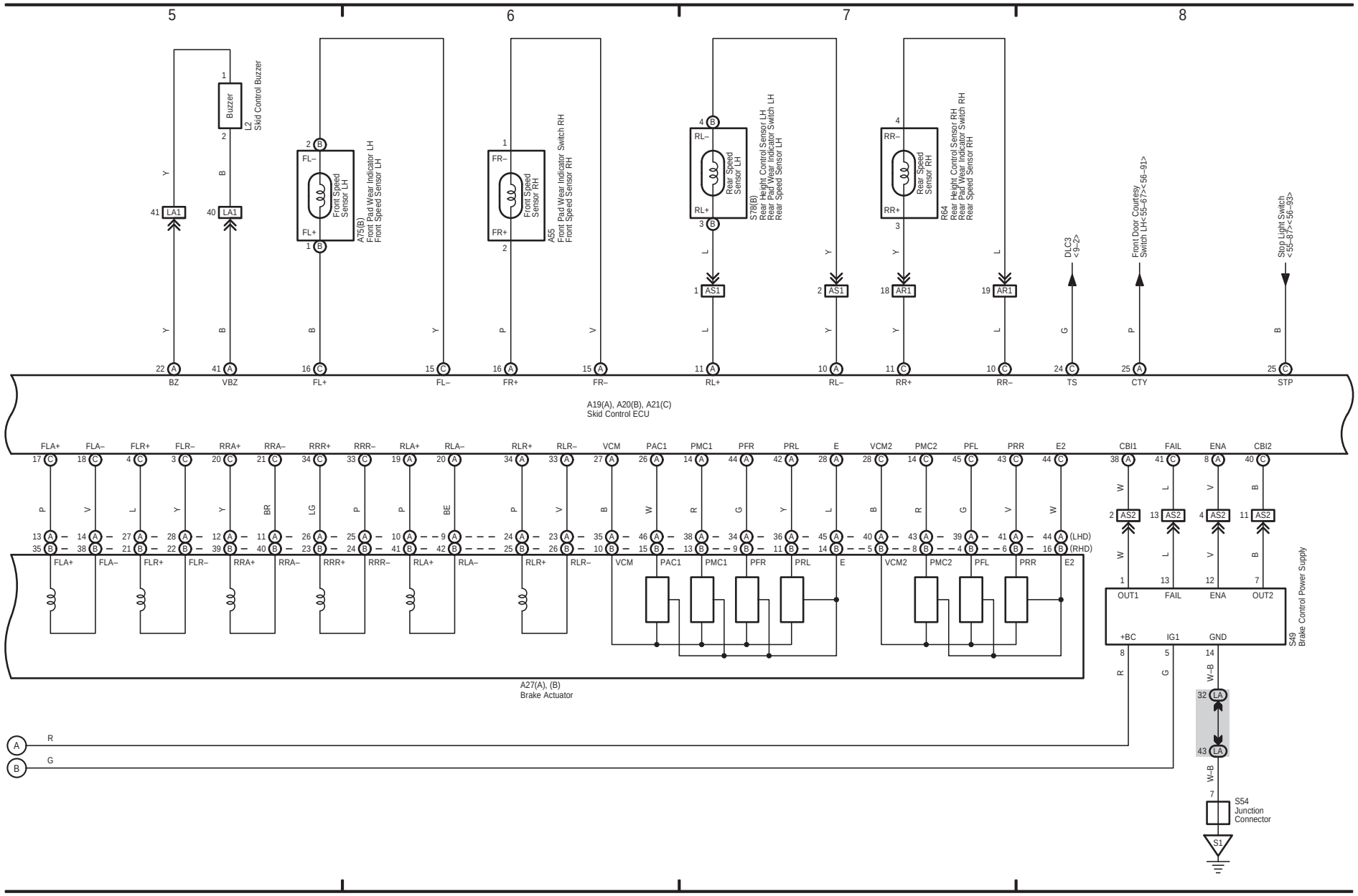

62 LS 460 L / LS 460 (Cont' d)
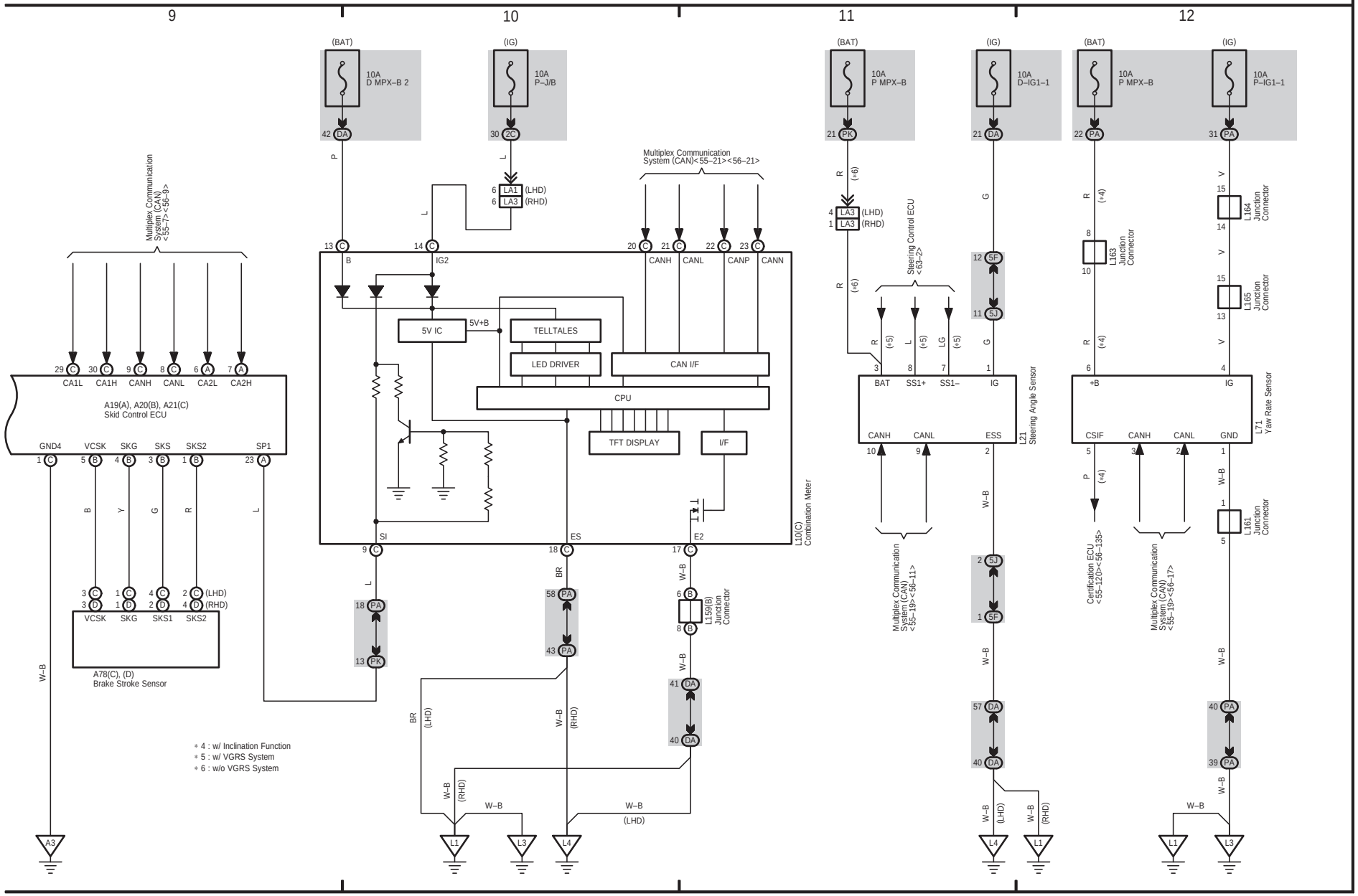
Vehicle Dynamics Integrated Management and Brake Hold System (From Sep. 2012 Production)