(Cont. next page)

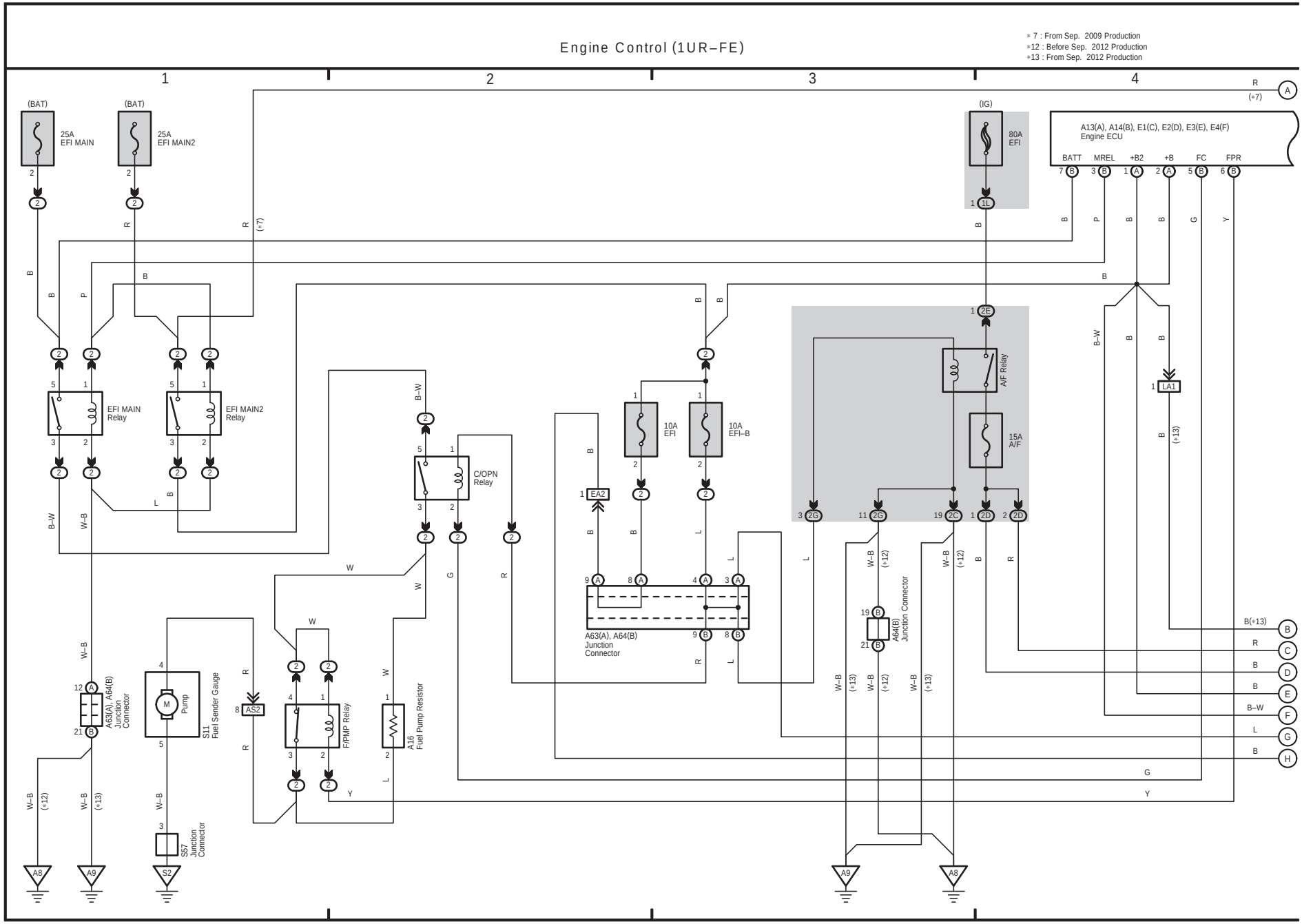

(Cont. next page)

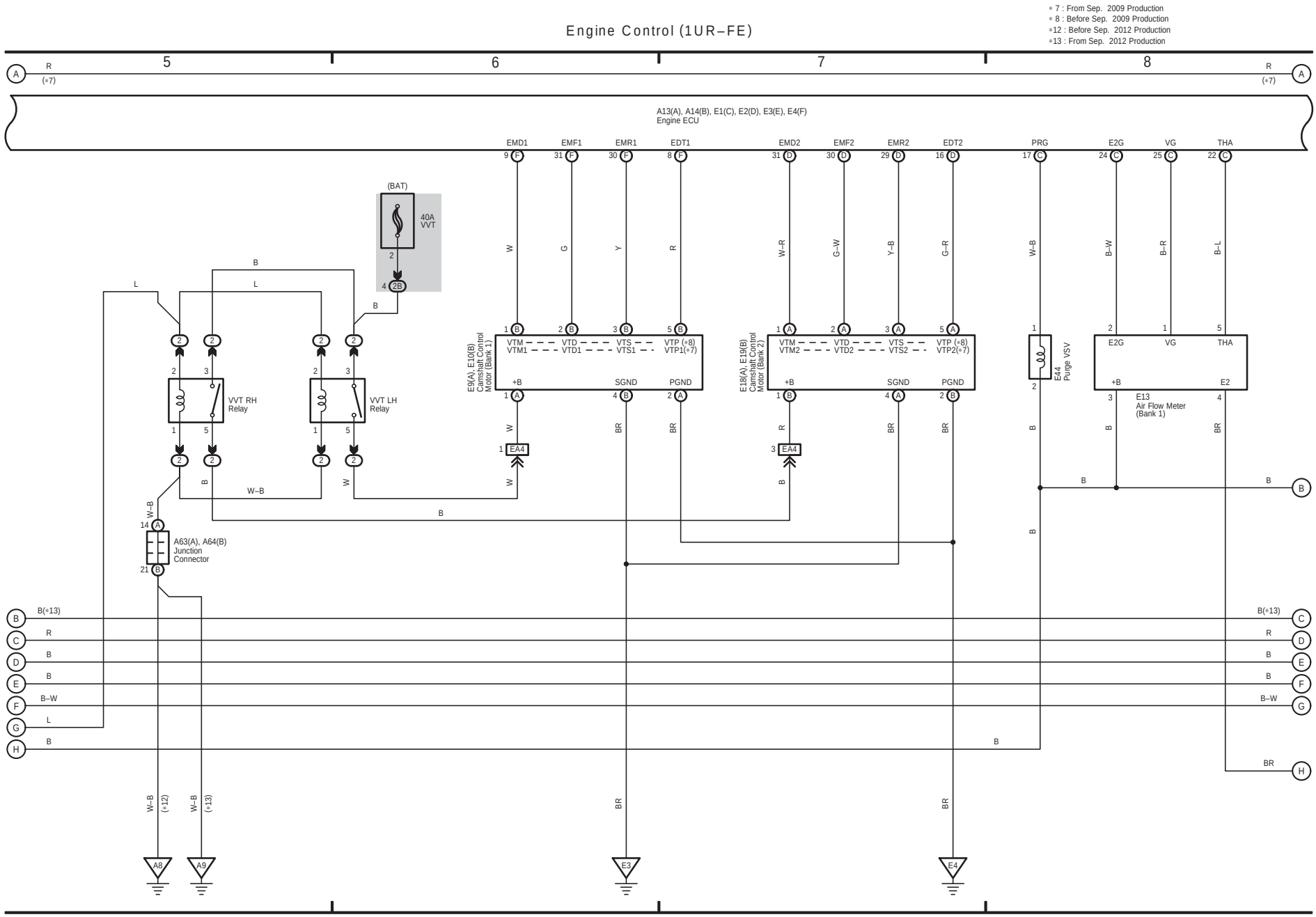

8 LS 460 L / LS 460 (Cont' d)

(Cont. next page)

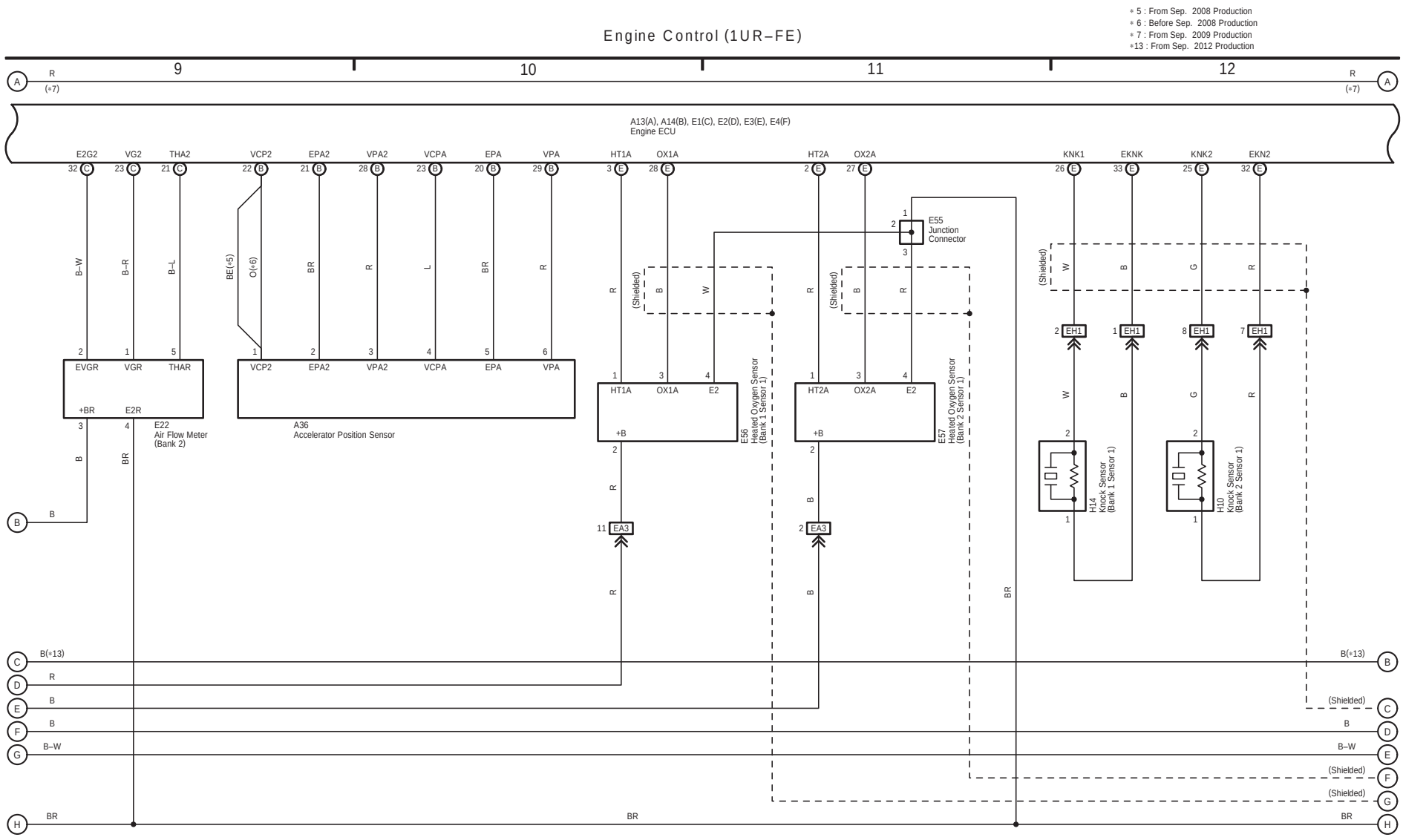

(Cont. next page)

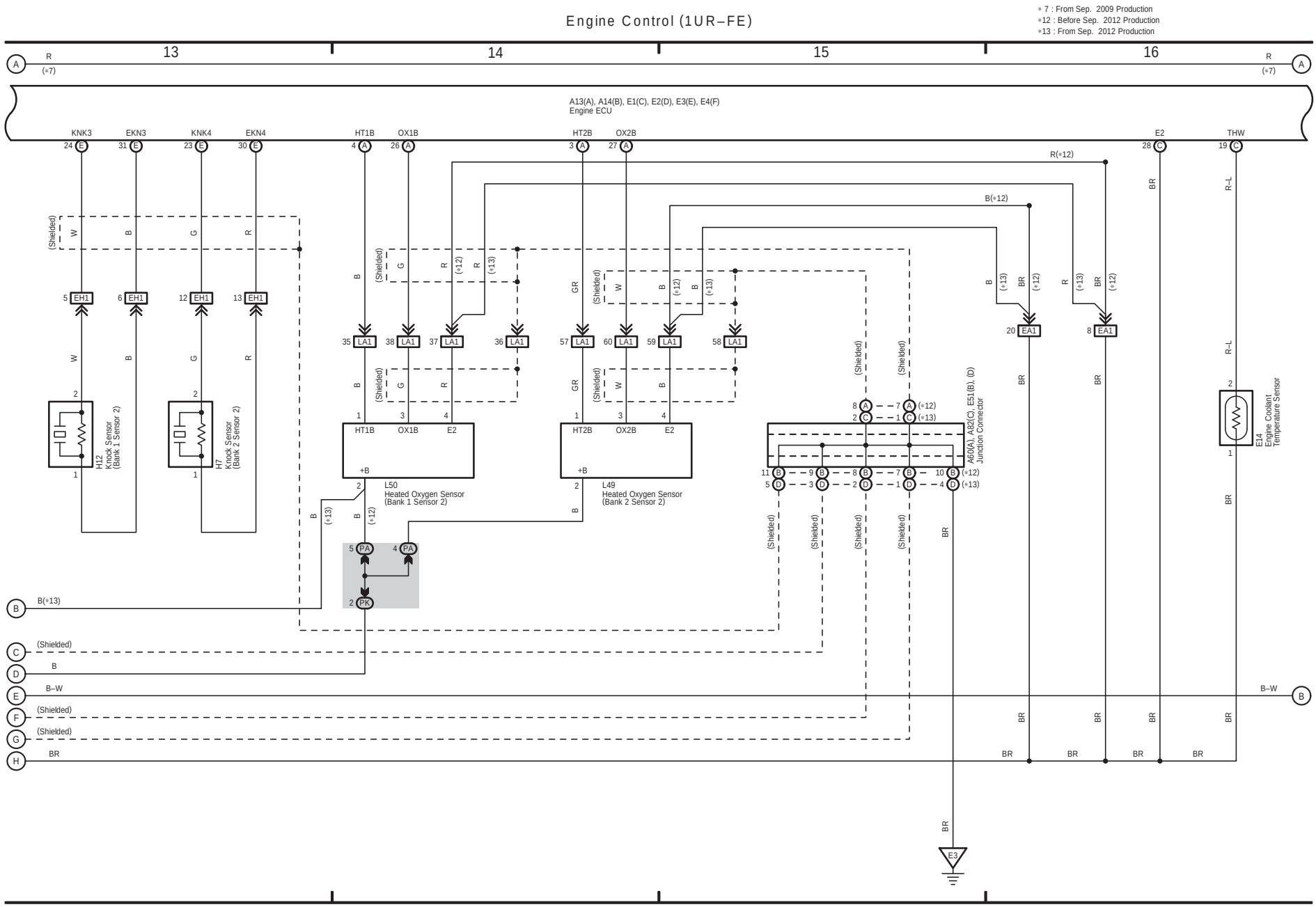

8 LS 460 L / LS 460 (Cont' d)

(Cont. next page)

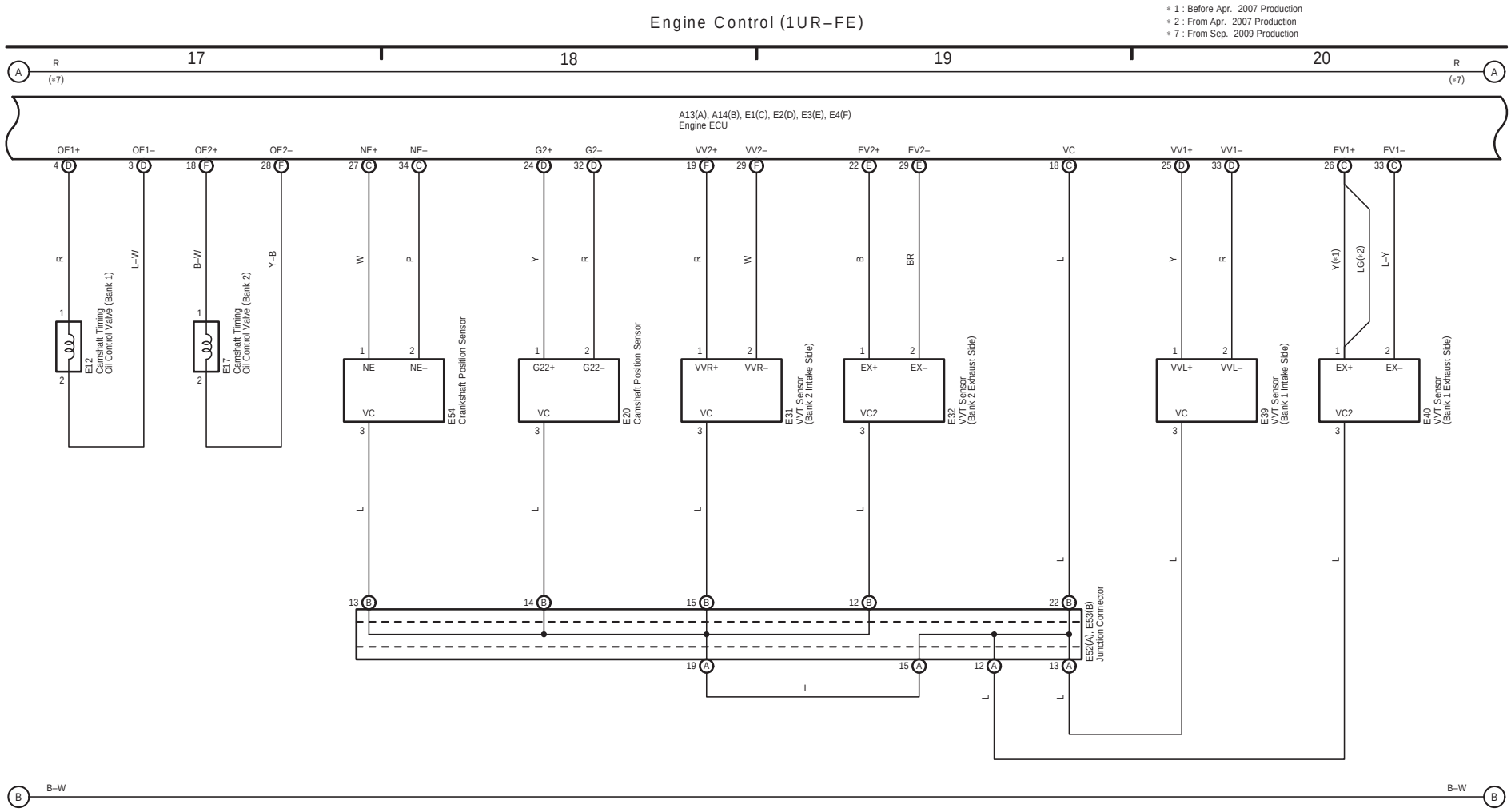

(Cont. next page)

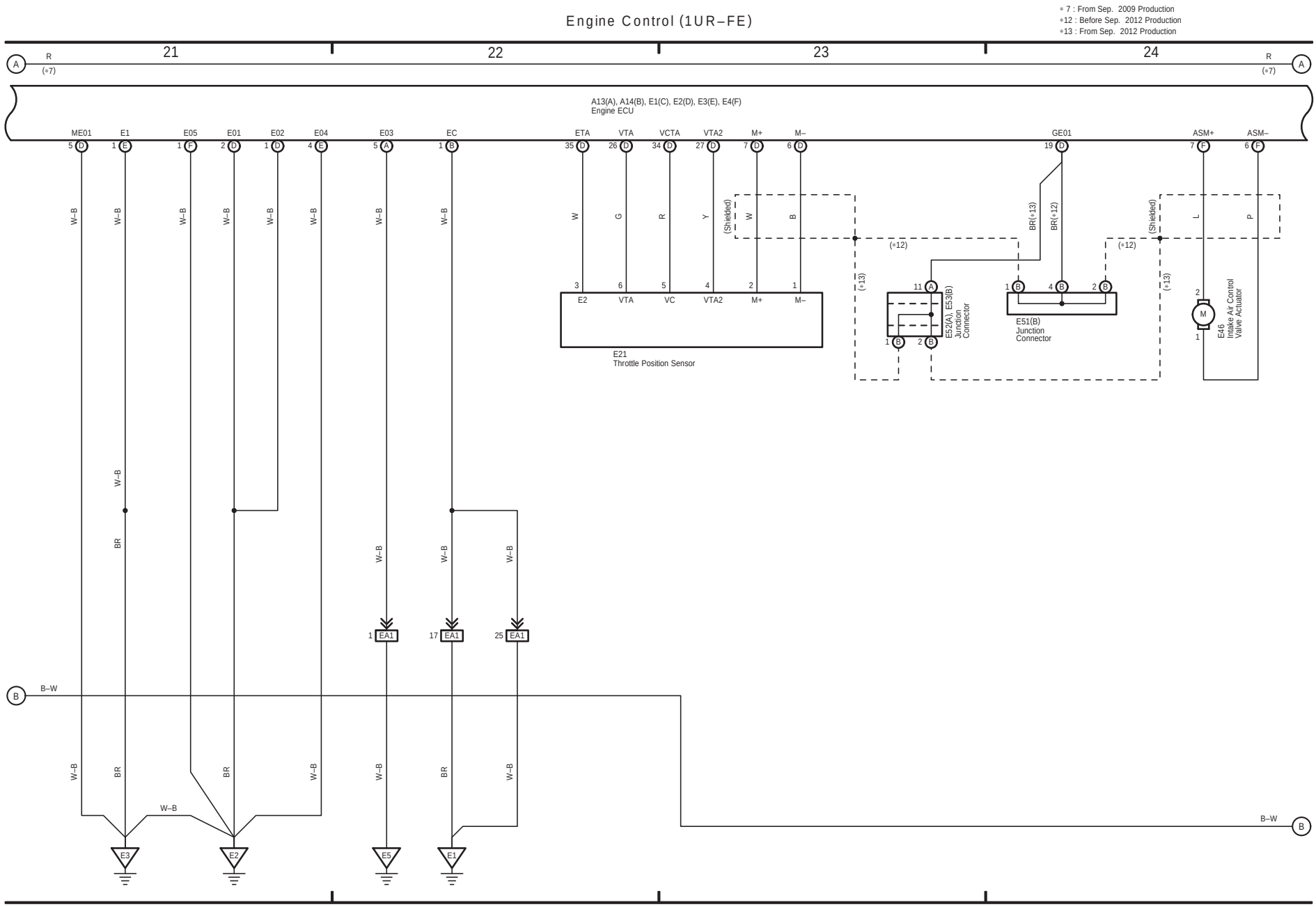

8 LS 460 L / LS 460 (Cont' d)

(Cont. next page)

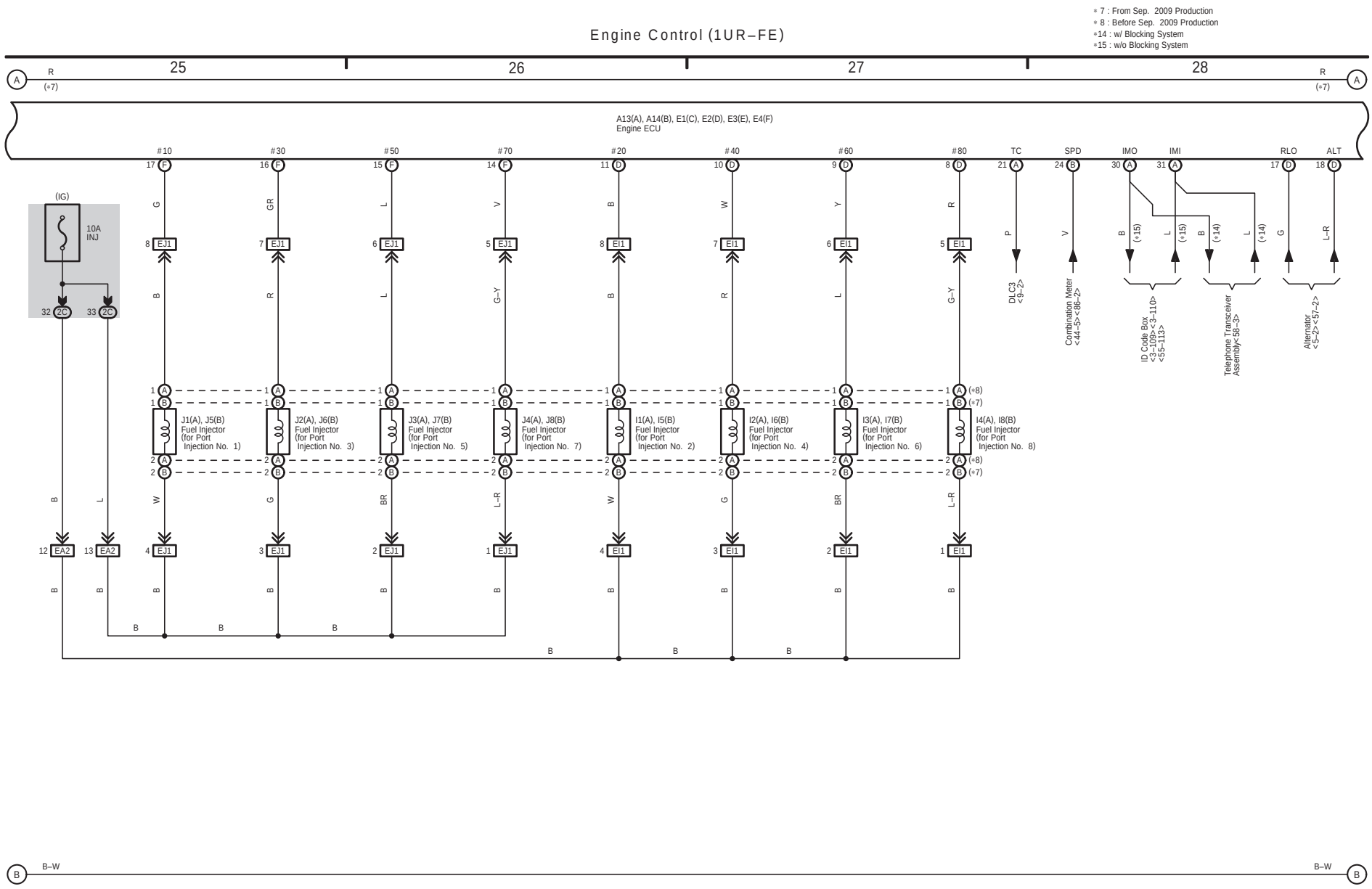

(Cont. next page)

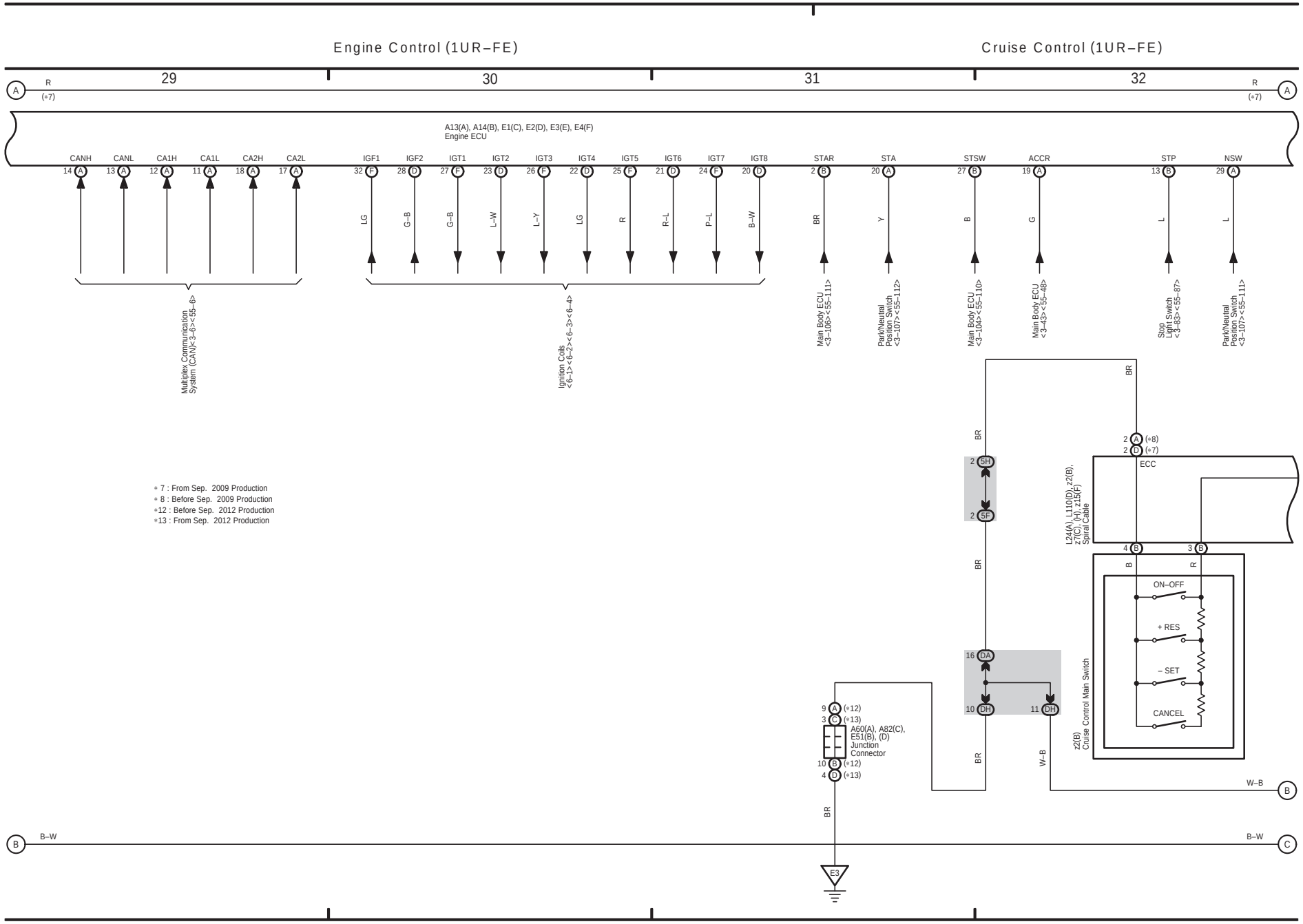

8 LS 460 L / LS 460 (Cont' d)

(Cont. next page)

Cruise Control (1UR–FE)

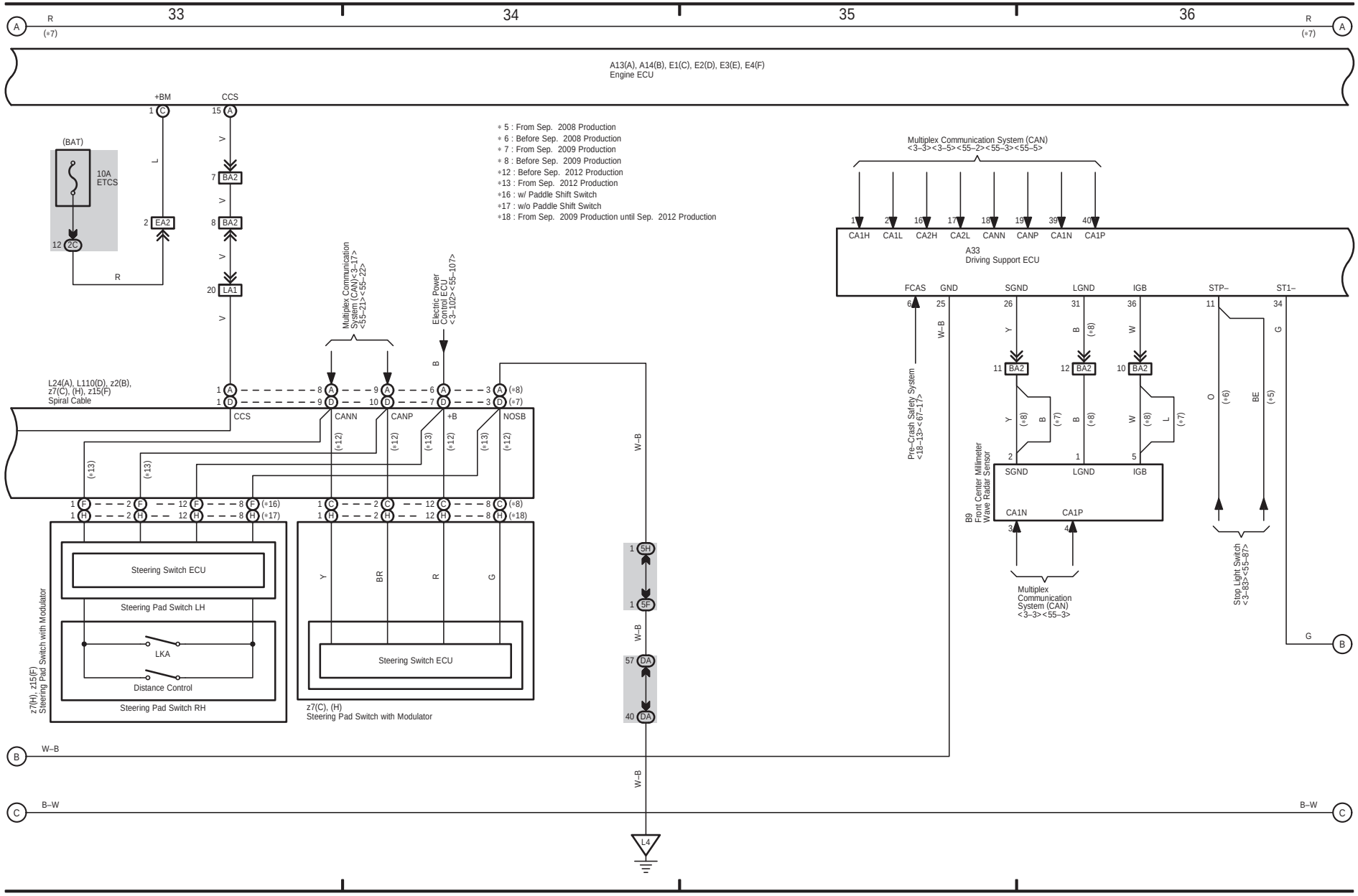

(Cont. next page)

ECT and A/T Indicator (1UR–FE)

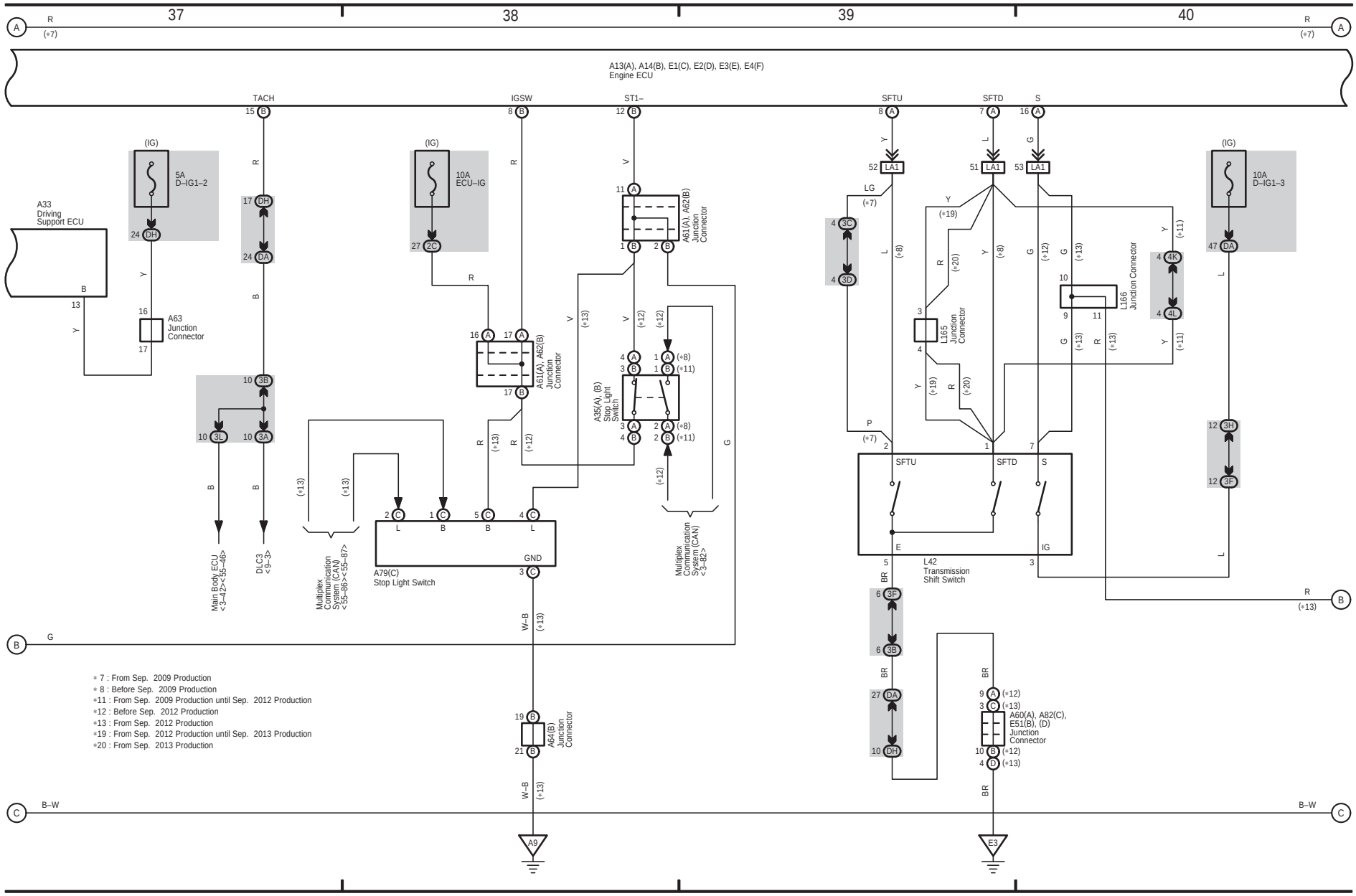

8 LS 460 L / LS 460 (Cont' d)

(Cont. next page)

∗ 7 : From Sep. 2009 Production
∗ 8 : Before Sep. 2009 Production
∗11 : From Sep. 2009 Production until Sep. 2012 Production
∗12 : Before Sep. 2012 Production
∗13 : From Sep. 2012 Production

ECT and A/T Indicator (1UR–FE)

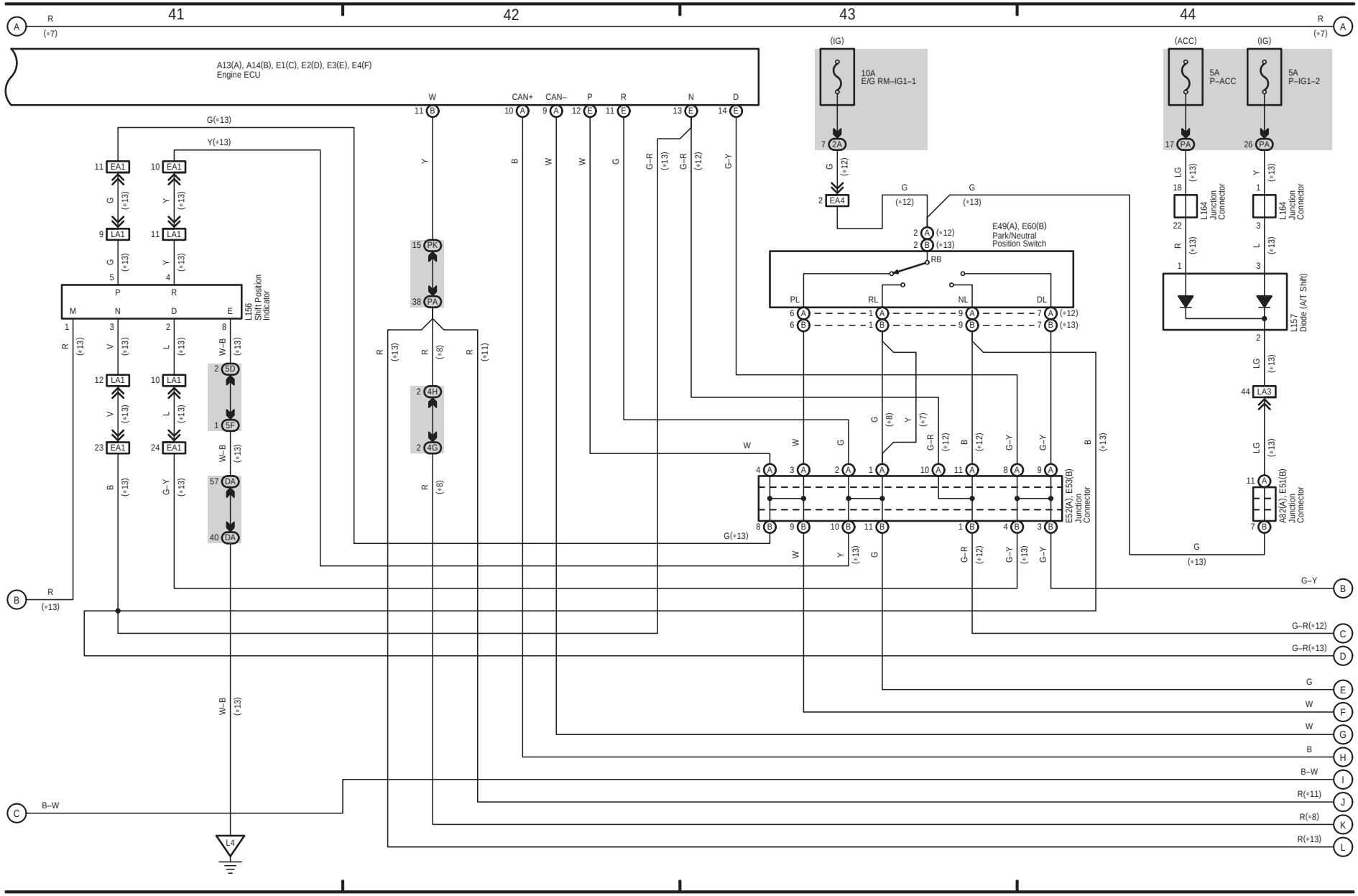

(Cont. next page)

ECT and A/T Indicator (1UR–FE)

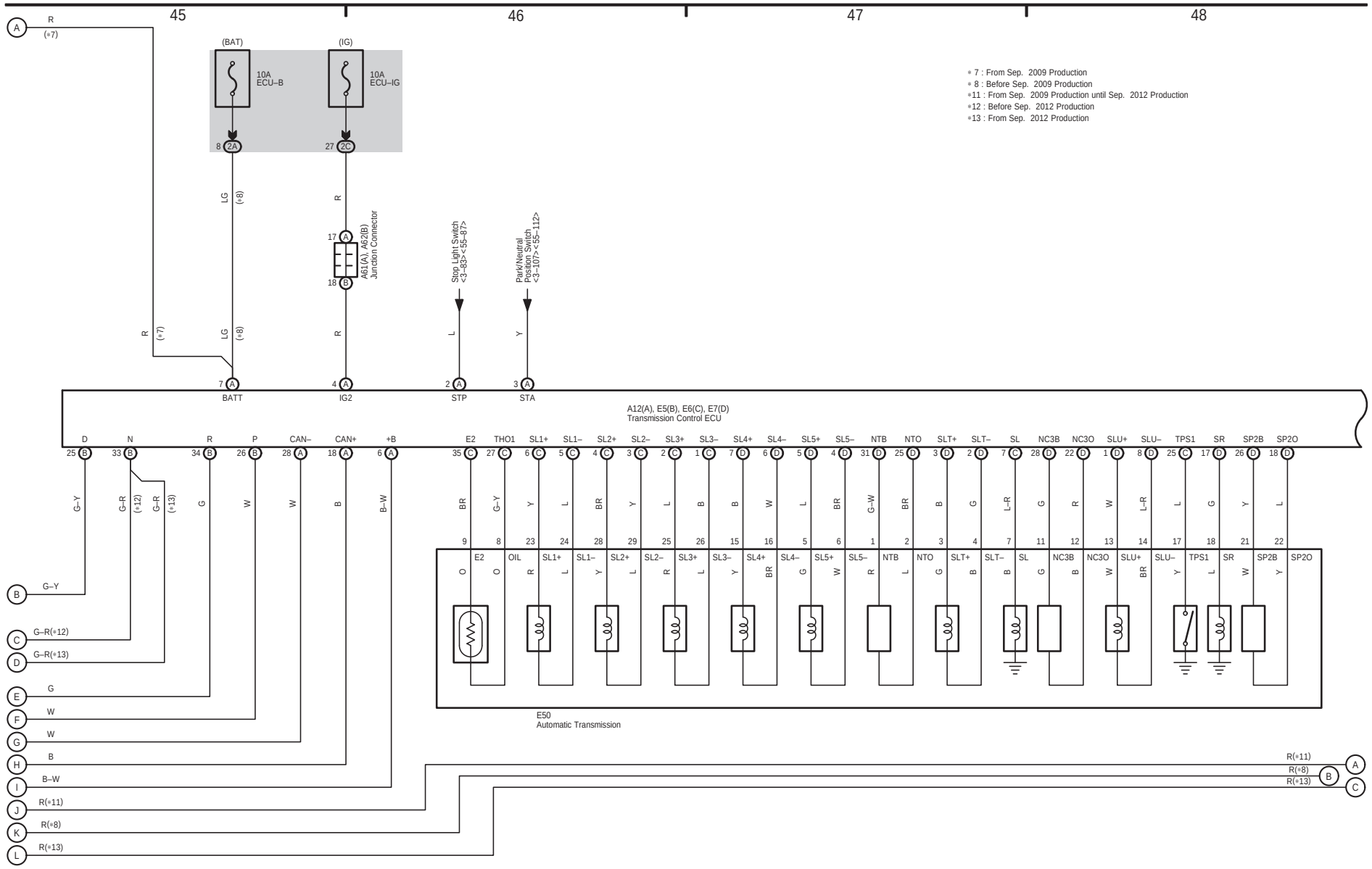

8 LS 460 L / LS 460 (Cont' d)

(Cont. next page)

ECT and A/T Indicator (1UR–FE)

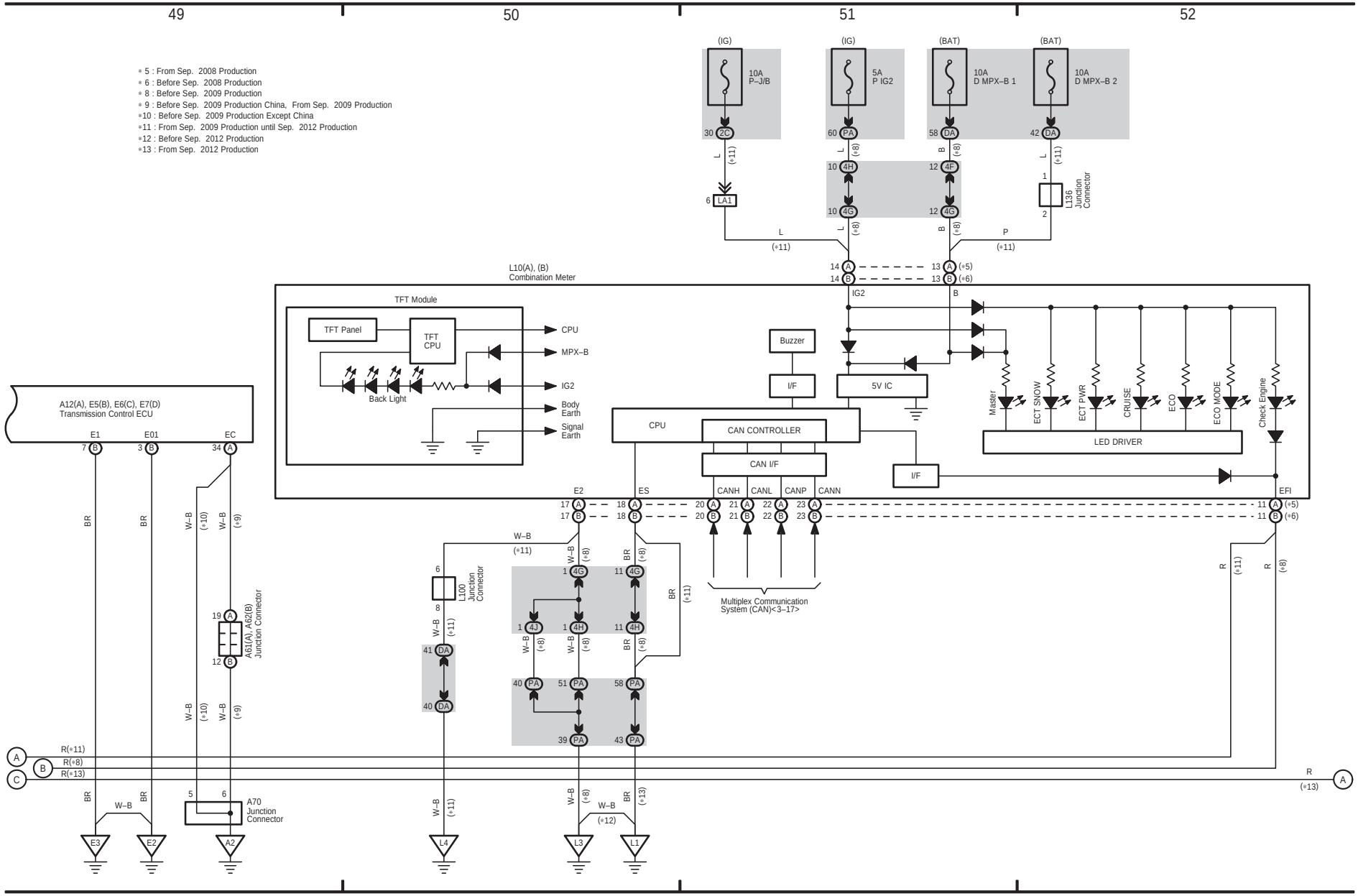
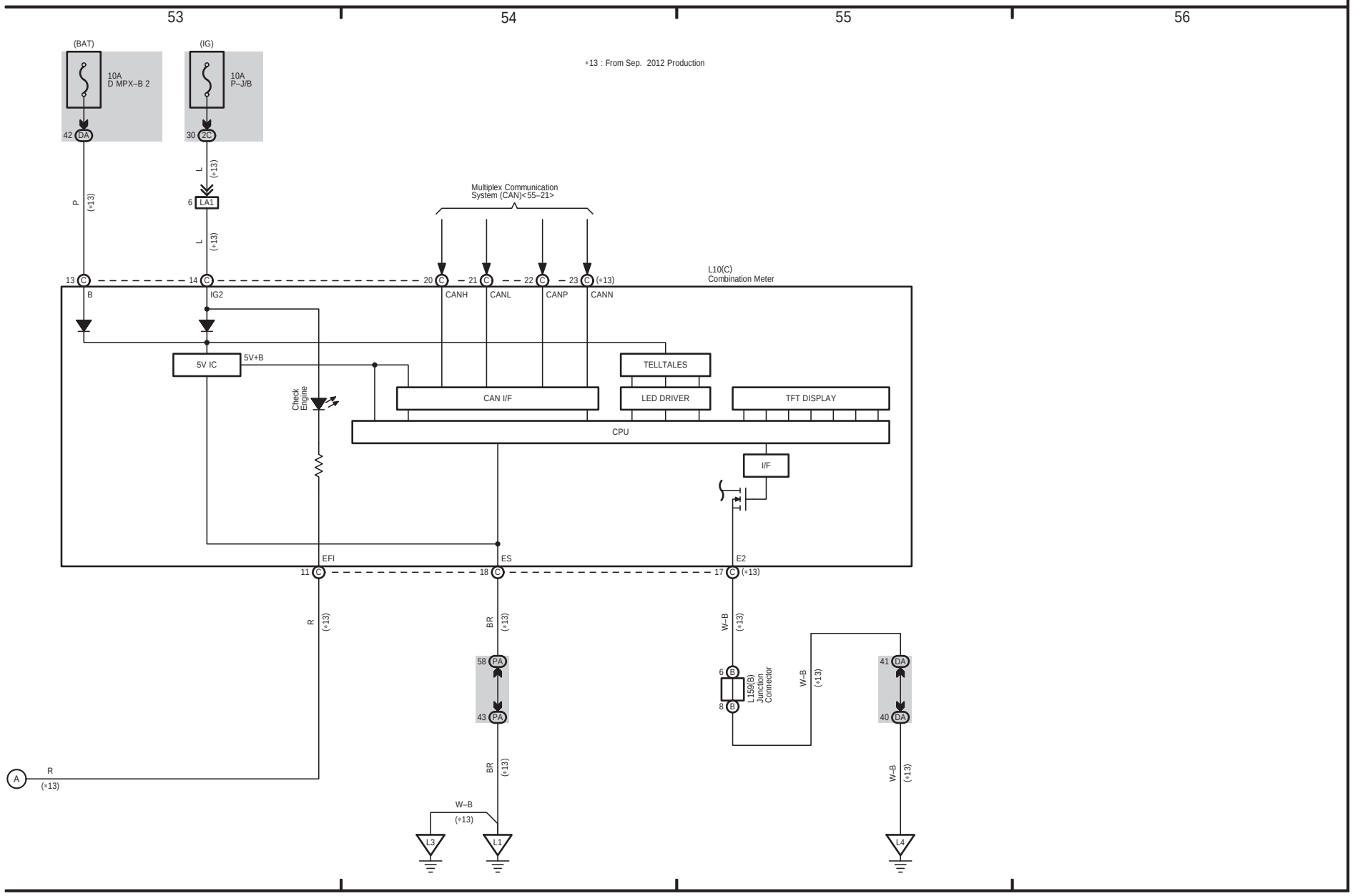
ECT and A/T Indicator (1UR–FE)