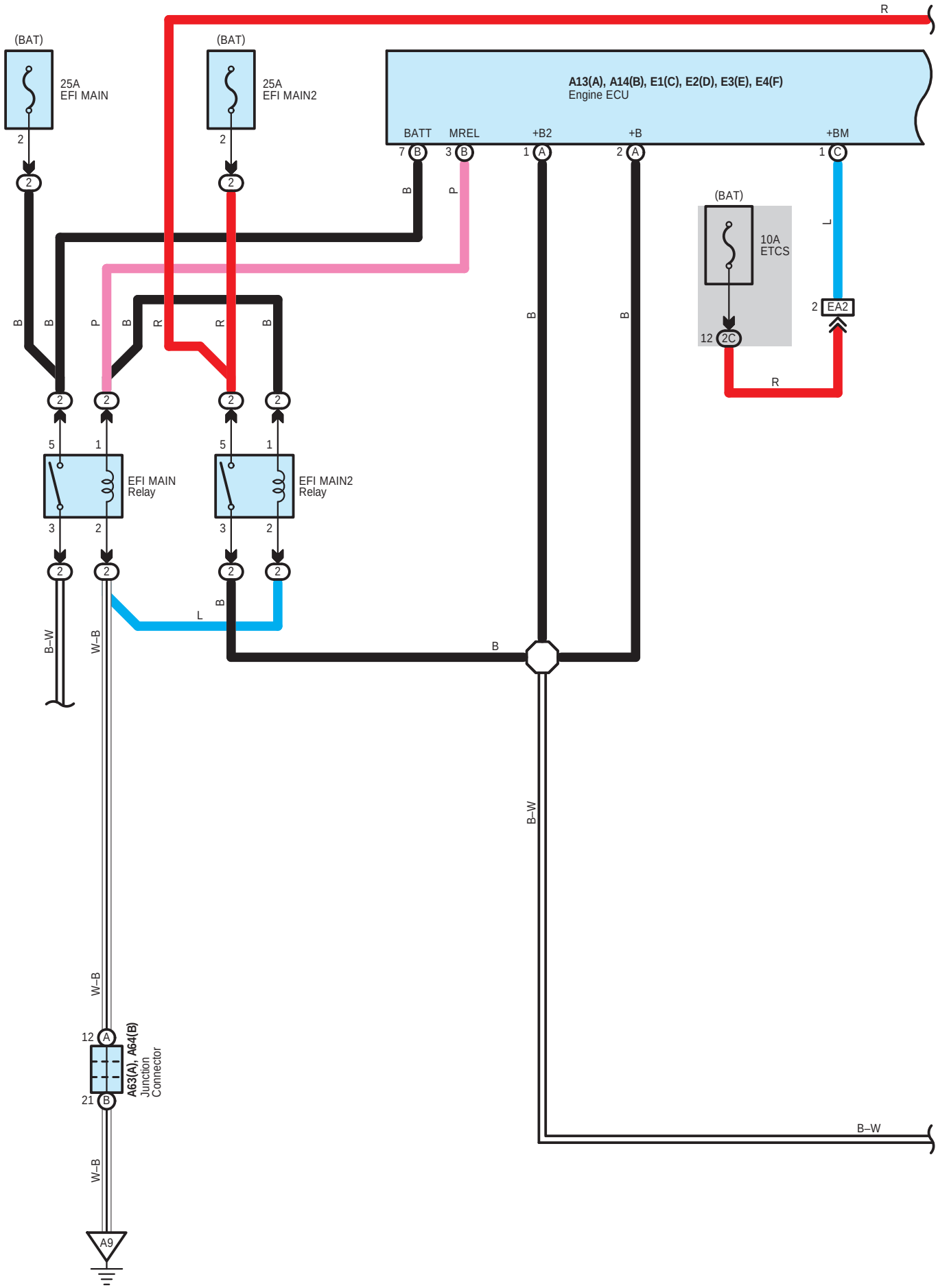
(BAT)
25A
EFI MAIN
(BAT)
25A
EFI MAIN2
A13(A), A14(B), E1(C), E2(D), E3(E), E4(F)
Engine ECU
BATT
MREL
+B2
+B
+BM
(BAT)
10A
ETCS
EA2
EFI MAIN
Relay
EFI MAIN2
Relay
A63(A), A64(B)
Junction
Connector
A9
R
B
P
L
B–W
W–B

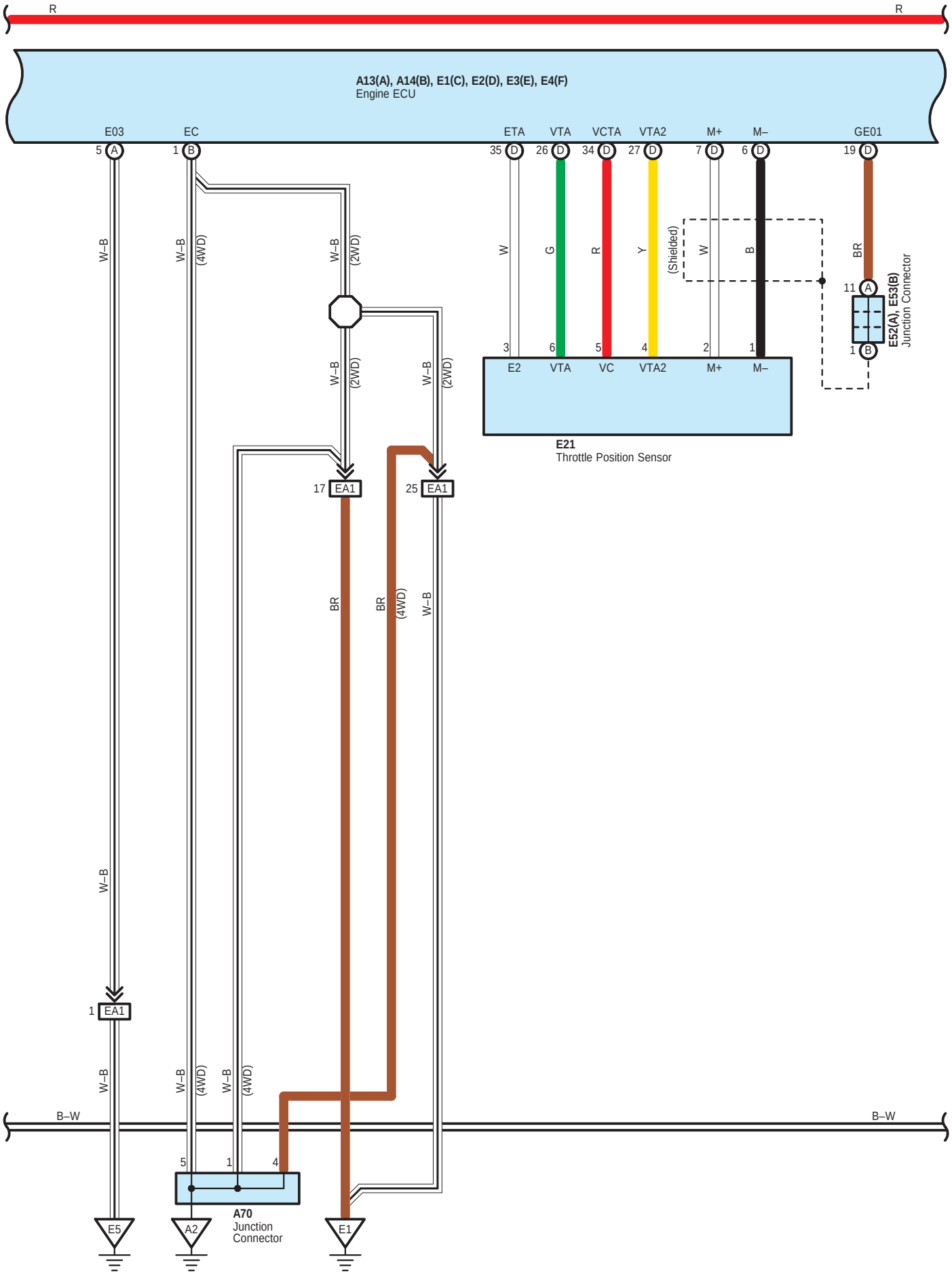
R
R
A13(A), A14(B), E1(C), E2(D), E3(E), E4(F)
Engine ECU
E03
EC
ETA
VTA
VCTA
VTA2
M+
M–
GE01
5 A
1 B
35 D
26 D
34 D
27 D
7 D
6 D
19 D
W–B
W–B
(4WD)
W–B
(2WD)
W
G
R
Y
(Shielded)
W
B
BR
11 A
1 B
E52(A), E53(B)
Junction Connector
3
6
5
4
2
1
E2
VTA
VC
VTA2
M+
M–
E21
Throttle Position Sensor
W–B
(2WD)
W–B
(2WD)
17 EA1
25 EA1
BR
BR
(4WD)
W–B
W–B
1 EA1
W–B
W–B
(4WD)
W–B
(4WD)
B–W
B–W
5
1
4
A70
Junction
Connector
E5
A2
E1

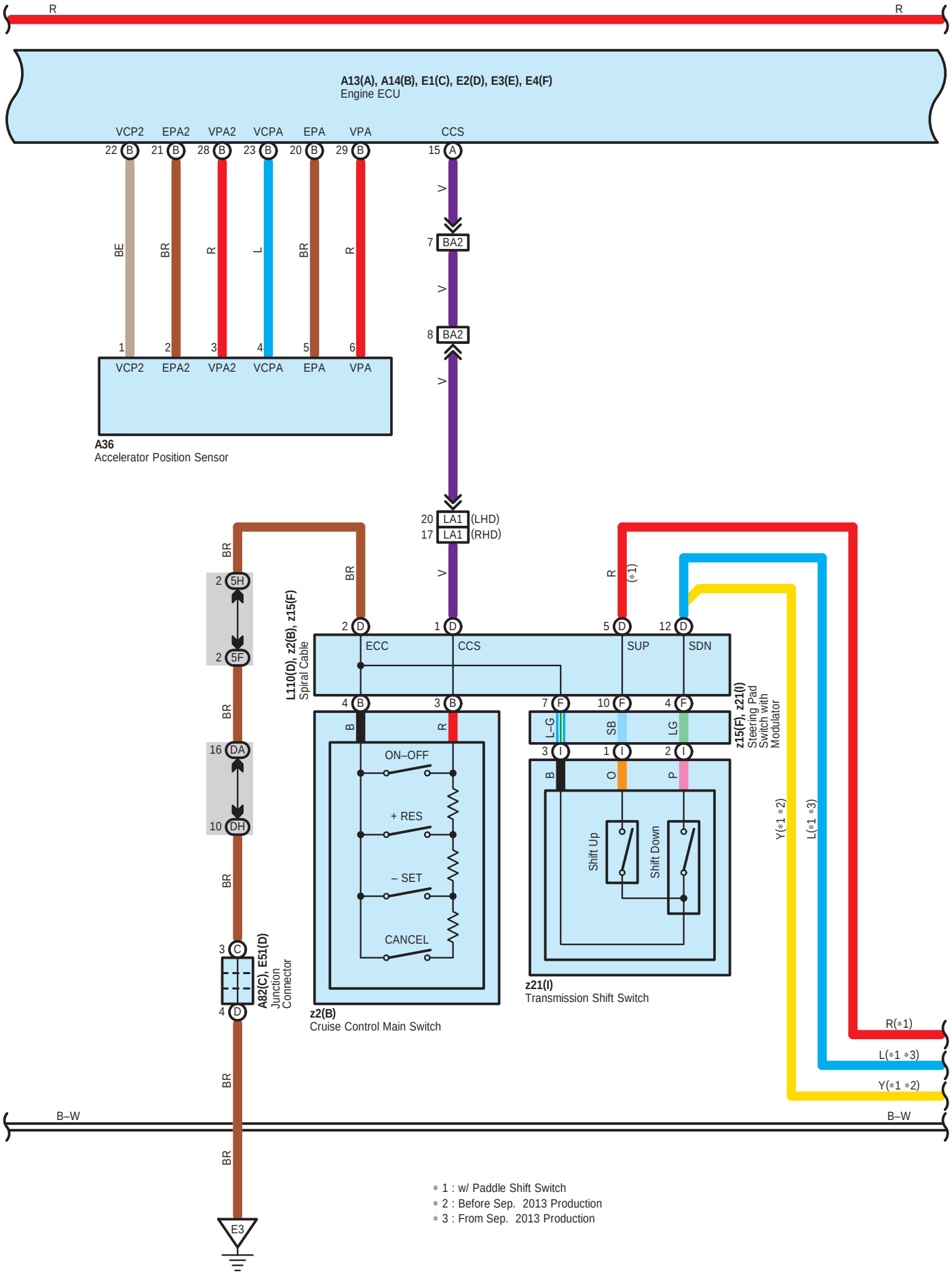

* 1 : w/ Paddle Shift Switch
* 2 : Before Sep. 2013 Production
* 3 : From Sep. 2013 Production

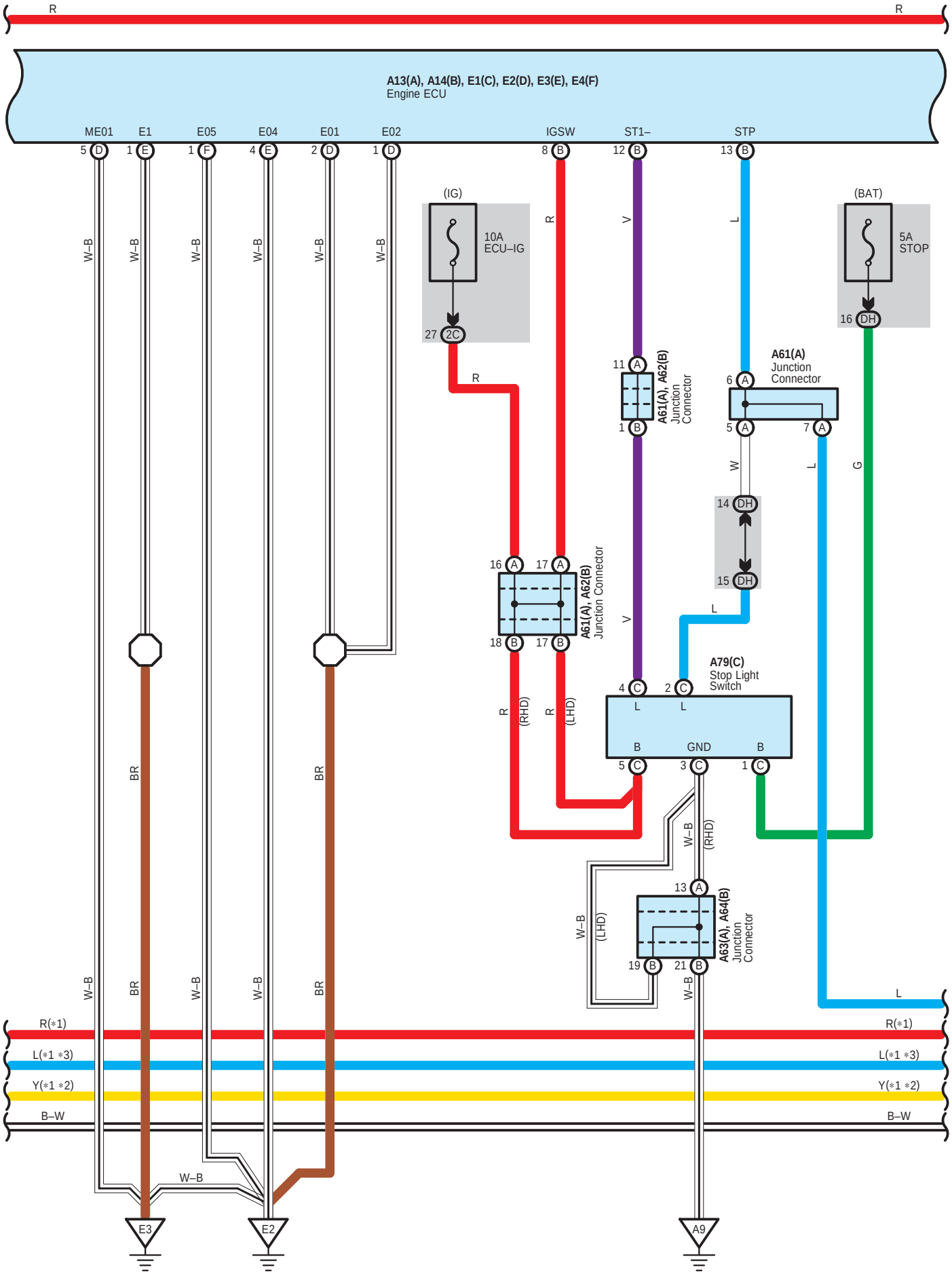
R
R
A13(A), A14(B), E1(C), E2(D), E3(E), E4(F)
Engine ECU
ME01
E1
E05
E04
E01
E02
IGSW
ST1–
STP
(IG)
10A
ECU–IG
(BAT)
5A
STOP
A61(A), A62(B)
Junction
Connector
A61(A)
Junction
Connector
A61(A), A62(B)
Junction Connector
A79(C)
Stop Light
Switch
GND
(RHD)
(LHD)
A63(A), A64(B)
Junction
Connector
W–B
BR
R(∗1)
L(∗1 ∗3)
Y(∗1 ∗2)
B–W
E3
E2
A9

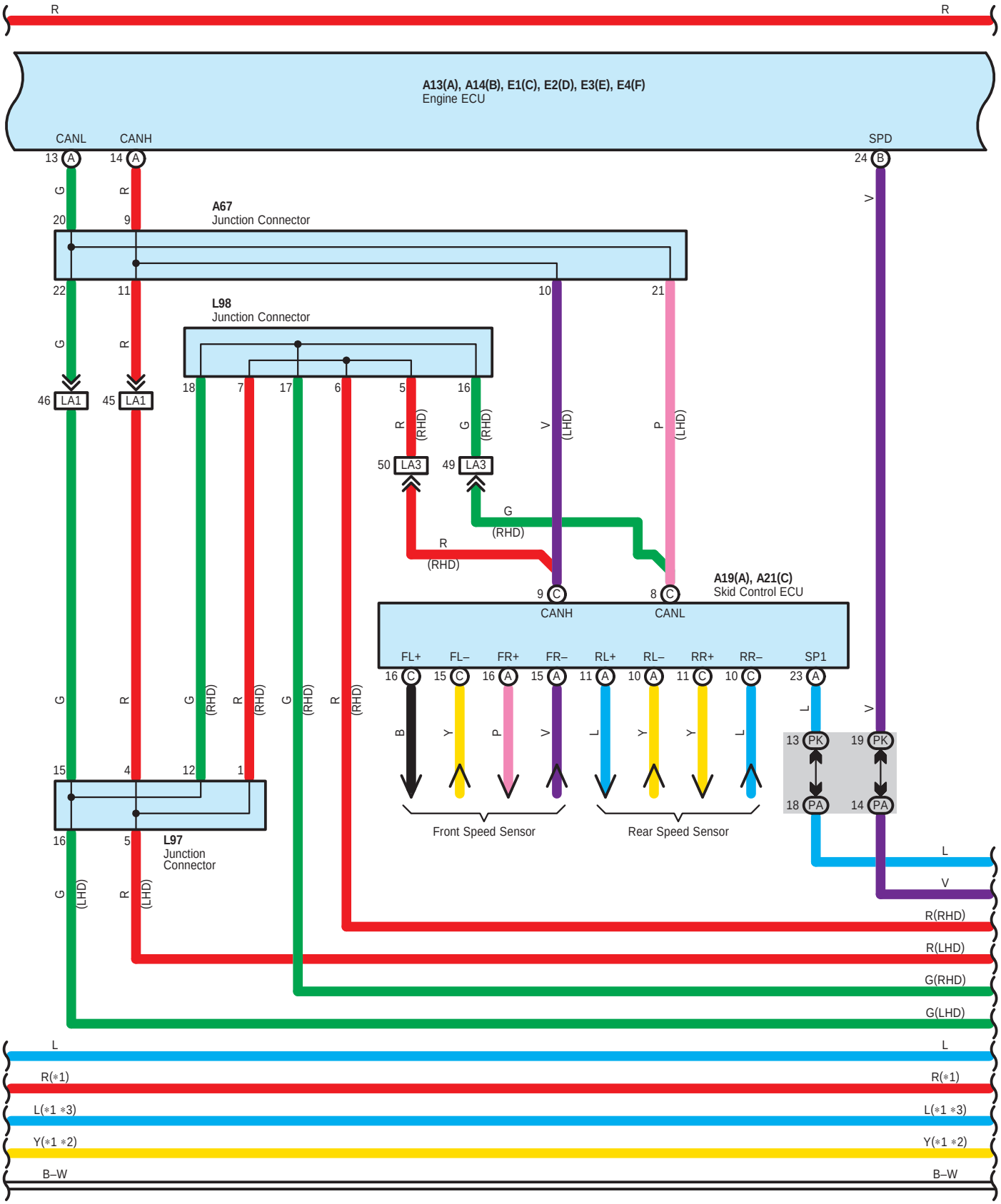
R
R
A13(A), A14(B), E1(C), E2(D), E3(E), E4(F)
Engine ECU
CANL
CANH
SPD
13 A
14 A
24 B
G
R
V
20
9
A67
Junction Connector
22
11
10
21
L98
Junction Connector
G
R
46 LA1
45 LA1
18
7
17
6
5
16
R (RHD)
G (RHD)
V (LHD)
P (LHD)
50 LA3
49 LA3
G (RHD)
R (RHD)
9 C
8 C
CANH
CANL
A19(A), A21(C)
Skid Control ECU
FL+
FL–
FR+
FR–
RL+
RL–
RR+
RR–
SP1
16 C
15 C
16 A
15 A
11 A
10 A
11 C
10 C
23 A
B
Y
P
V
L
Y
Y
L
13 PK
19 PK
18 PA
14 PA
Front Speed Sensor
Rear Speed Sensor
15
4
12
1
16
5
L97
Junction Connector
G (LHD)
R (LHD)
L
V
R(RHD)
R(LHD)
G(RHD)
G(LHD)
L
L
R(∗1)
R(∗1)
L(∗1 ∗3)
L(∗1 ∗3)
Y(∗1 ∗2)
Y(∗1 ∗2)
B–W
B–W

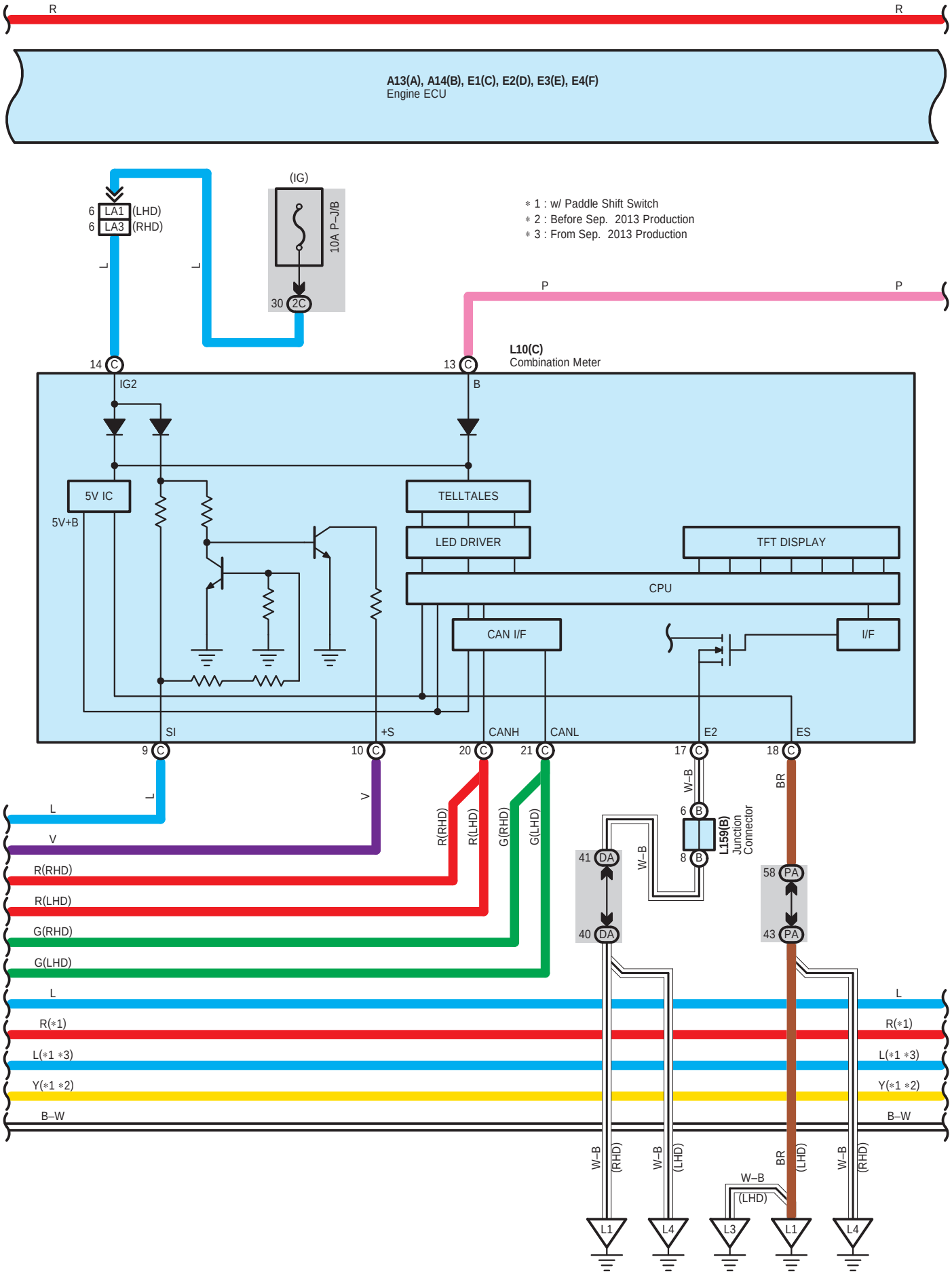
R
R
A13(A), A14(B), E1(C), E2(D), E3(E), E4(F)
Engine ECU
6 LA1 (LHD)
6 LA3 (RHD)
(IG)
10A P–J/B
30 2C
∗ 1 : w/ Paddle Shift Switch
∗ 2 : Before Sep. 2013 Production
∗ 3 : From Sep. 2013 Production
P
P
L10(C)
Combination Meter
14 C
13 C
IG2
B
5V IC
5V+B
TELLTALES
LED DRIVER
TFT DISPLAY
CPU
CAN I/F
I/F
SI
+S
CANH
CANL
E2
ES
9 C
10 C
20 C
21 C
17 C
18 C
W–B
BR
6 B
8 B
L159(B)
Junction Connector
41 DA
40 DA
58 PA
43 PA
L
V
R(RHD)
R(LHD)
G(RHD)
G(LHD)
L
R(∗1)
L(∗1 ∗3)
Y(∗1 ∗2)
B–W
W–B (RHD)
W–B (LHD)
BR (LHD)
W–B (LHD)
W–B (RHD)
L1
L4
L3
L1
L4

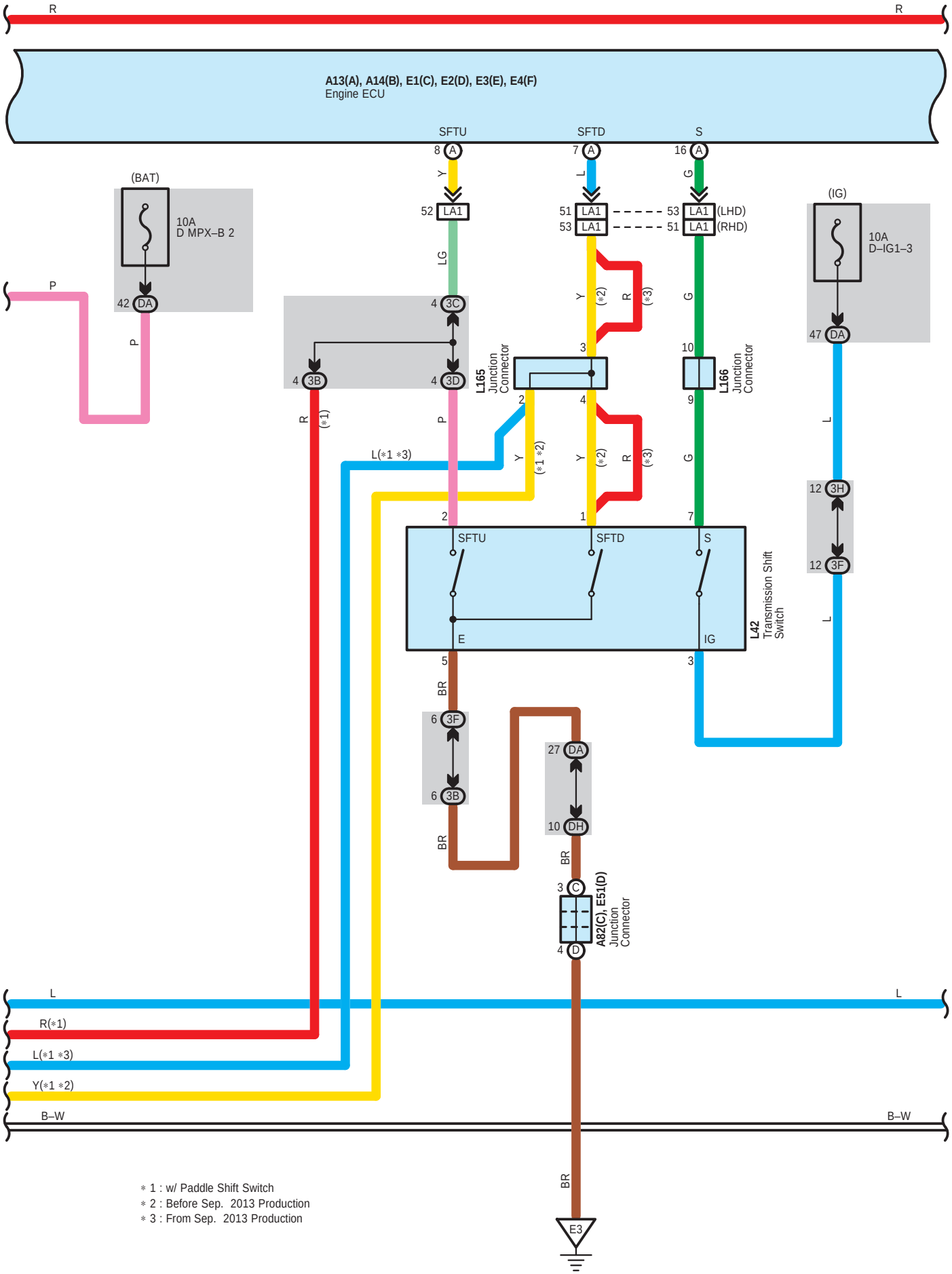

* 1 : w/ Paddle Shift Switch
* 2 : Before Sep. 2013 Production
* 3 : From Sep. 2013 Production

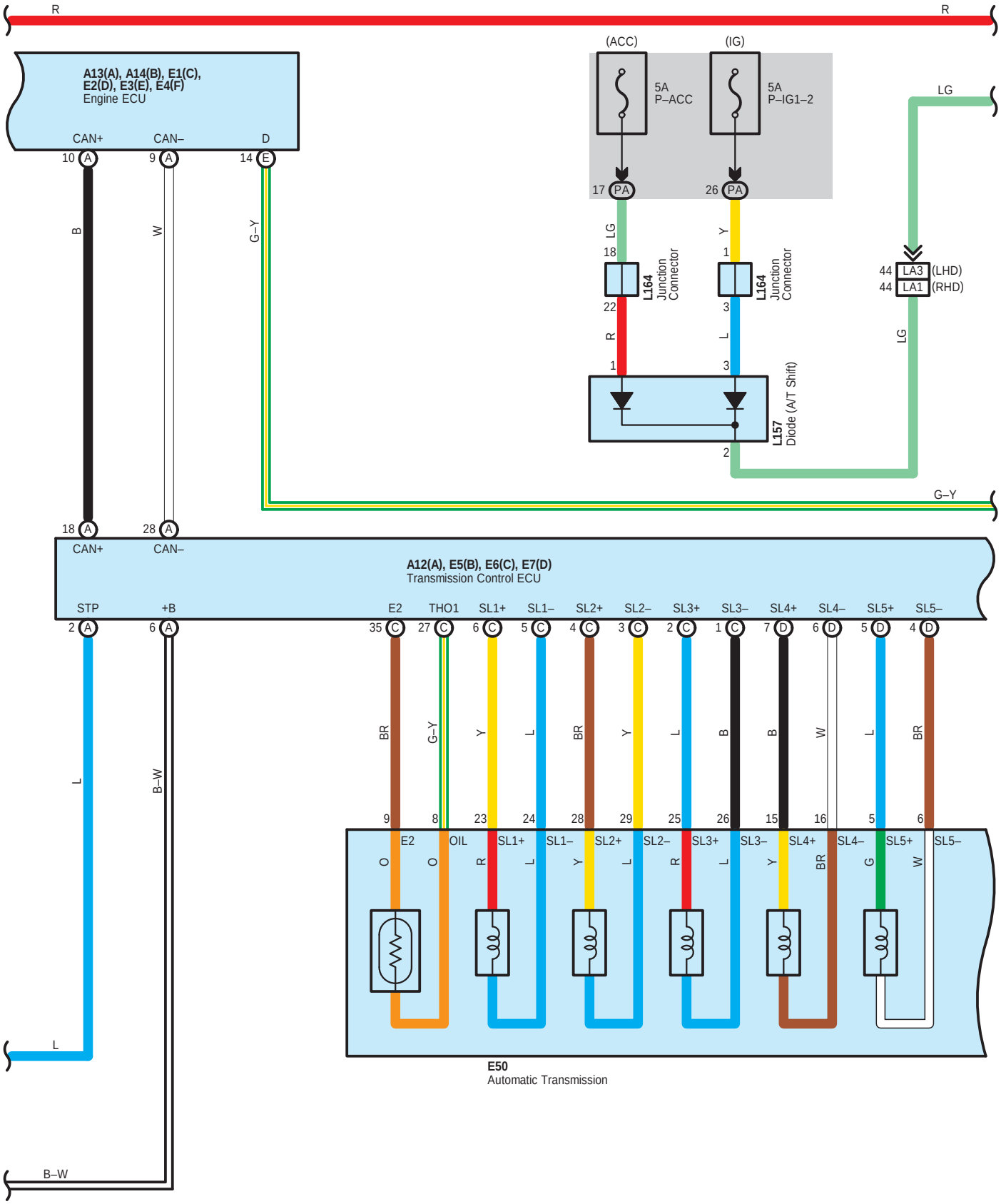
R
R
A13(A), A14(B), E1(C), E2(D), E3(E), E4(F)
Engine ECU
CAN+
CAN–
D
10 A
9 A
14 E
B
W
G–Y
(ACC)
(IG)
5A P–ACC
5A P–IG1–2
17 PA
26 PA
LG
Y
18
1
L164 Junction Connector
22
3
R
L
1
3
L157 Diode (A/T Shift)
2
LG
44 LA3 (LHD)
44 LA1 (RHD)
LG
G–Y
18 A
28 A
CAN+
CAN–
A12(A), E5(B), E6(C), E7(D)
Transmission Control ECU
STP
+B
E2
THO1
SL1+
SL1–
SL2+
SL2–
SL3+
SL3–
SL4+
SL4–
SL5+
SL5–
2 A
6 A
35 C
27 C
6 C
5 C
4 C
3 C
2 C
1 C
7 D
6 D
5 D
4 D
L
B–W
BR
G–Y
Y
L
BR
Y
L
B
B
W
L
BR
9
8
23
24
28
29
25
26
15
16
5
6
E2
OIL
SL1+
SL1–
SL2+
SL2–
SL3+
SL3–
SL4+
SL4–
SL5+
SL5–
O
O
R
L
Y
L
R
L
Y
BR
G
W
L
B–W
E50
Automatic Transmission

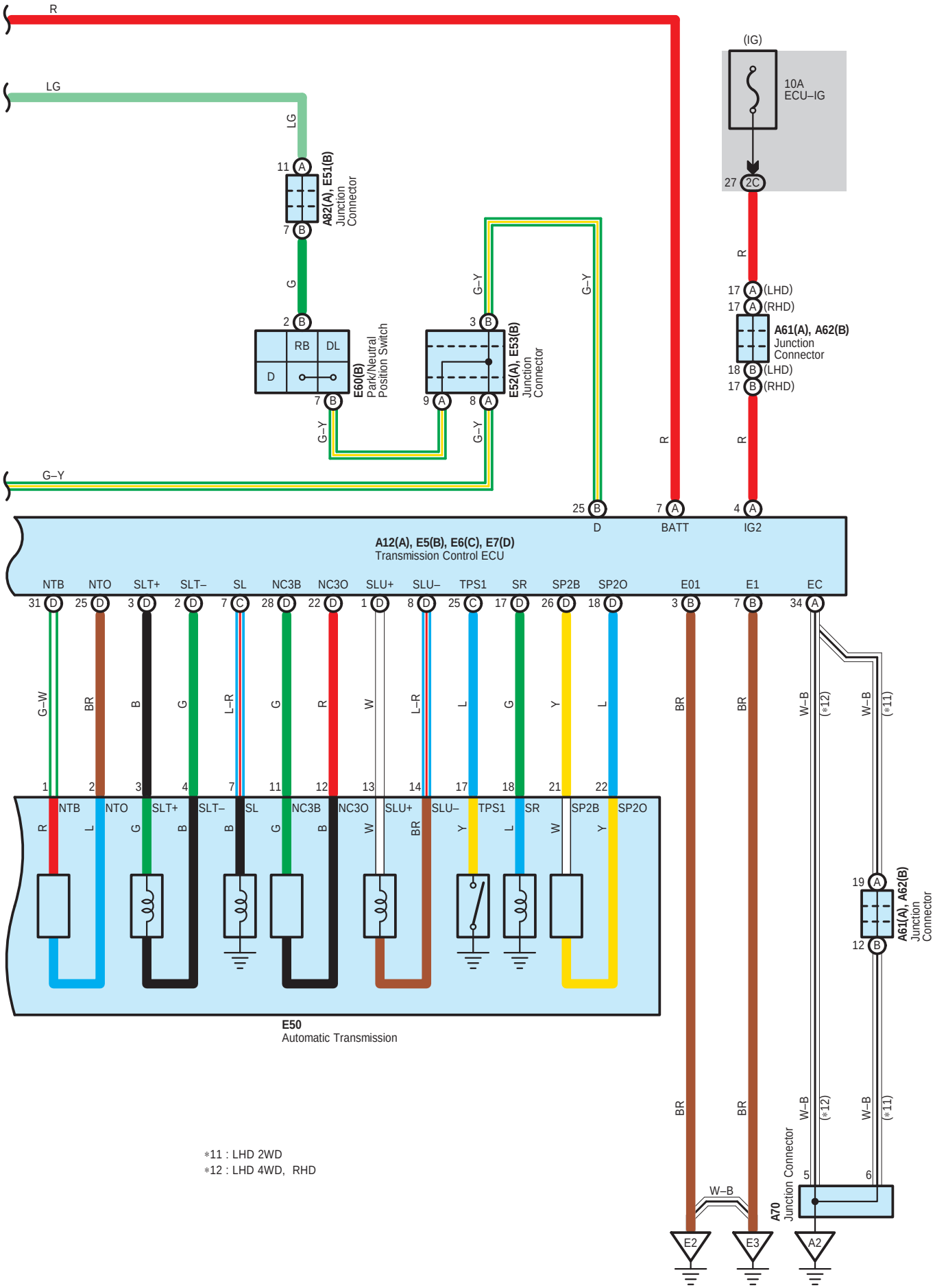

*11 : LHD 2WD
*12 : LHD 4WD, RHD

A 12
Gray

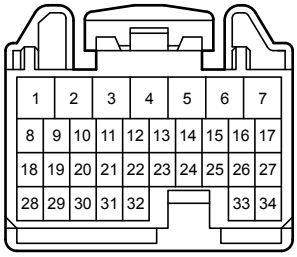

A 13
White

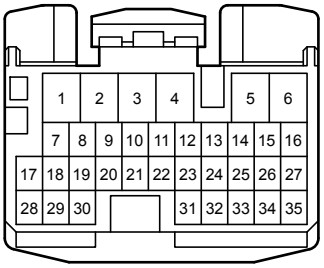

A 14
White

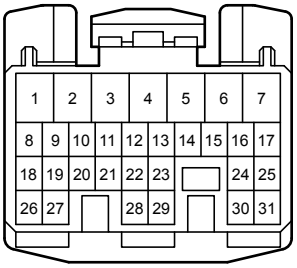

A 19
Black

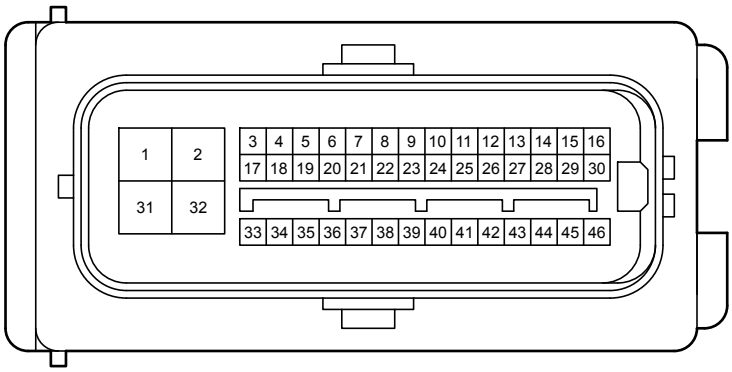

A 21
Gray

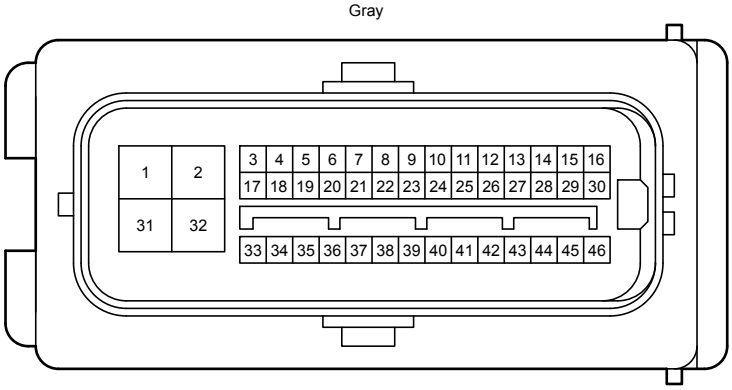

A 36
Black

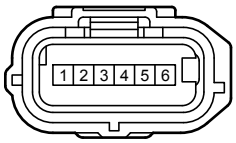

A 61
Black

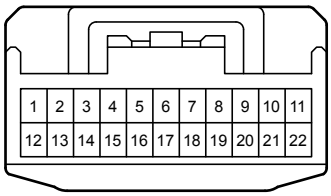

A 62
Blue

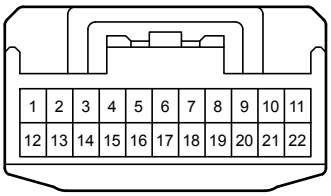

A 63
Black

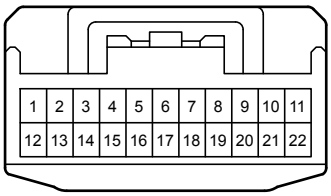

A 64
Black

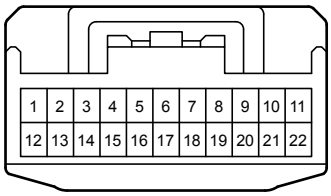

A 67
Black

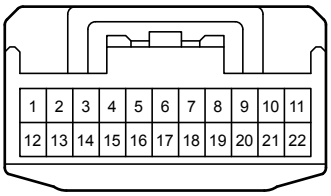

A 70
Gray

A 79
White

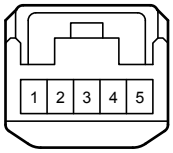

A 82
Gray

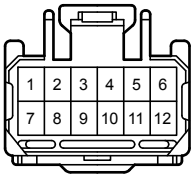

E 1
White

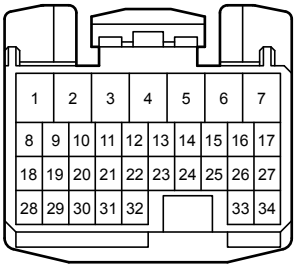

E 2
White

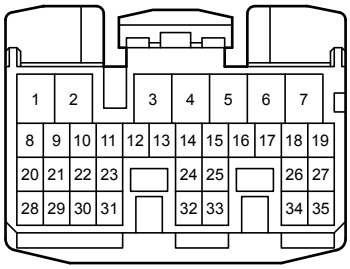

E 3
White

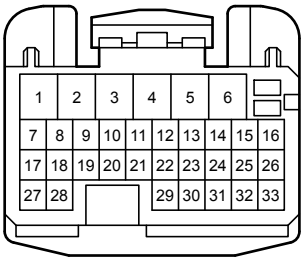

E 4
White

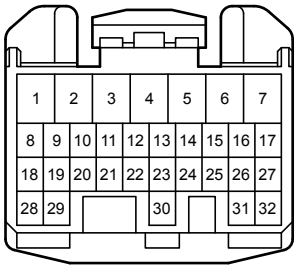

E 5
Gray

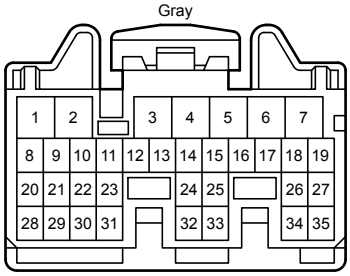

E 6
Gray

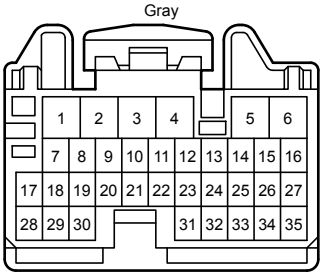

E 7
Gray

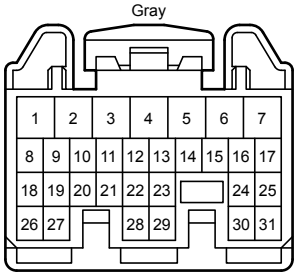

E 21
Black

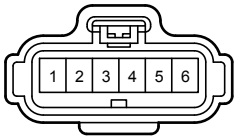

E 50
Gray

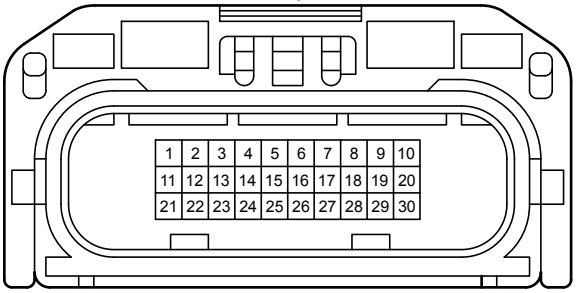

E 51
Blue

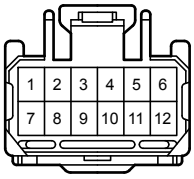

E 52
Black

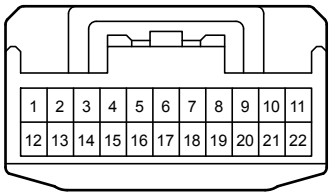

E 53
Black

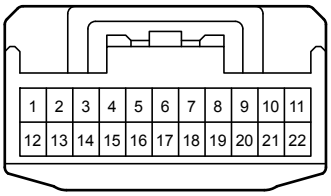

E 60
Black

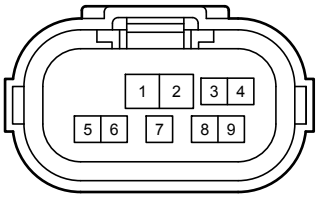

L 10
White

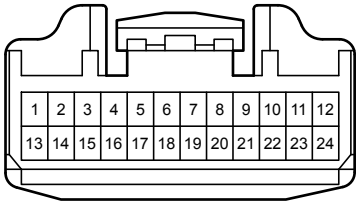

(Before Sep. 2008 Production)

L 10
Black

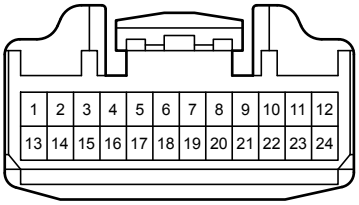

(From Sep. 2008 Production)

L 42
White

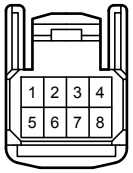

L 97
Black

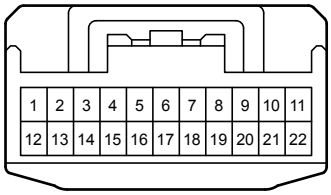

L 98
Gray

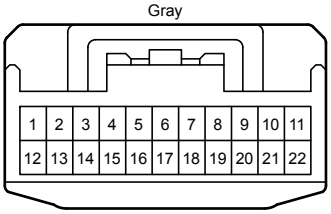

L110
Black

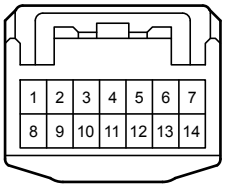

L157
White

L159
Blue

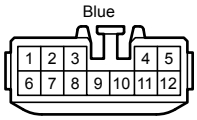

L164
Blue

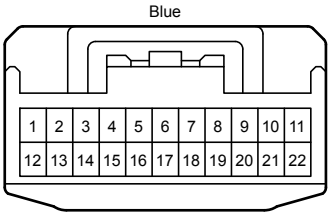

L165
Blue

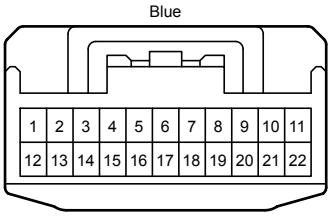

L166
White

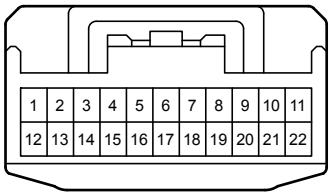

z 2
White

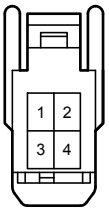

z 15
Black

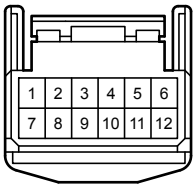

z 21
White

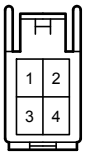

2C
White

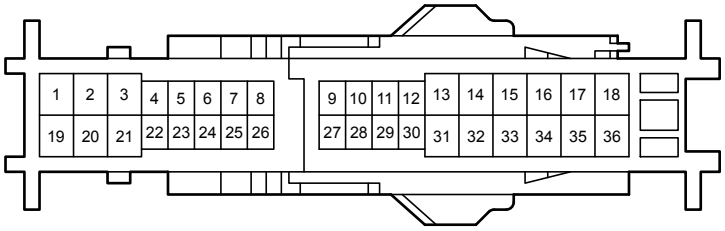

3B
Gray

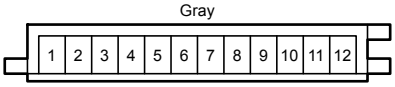

3C
White

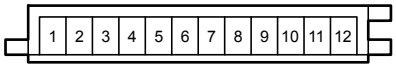

3D
Gray

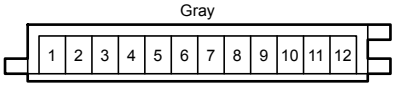

3F
Gray

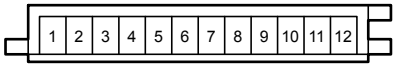

3H
Gray

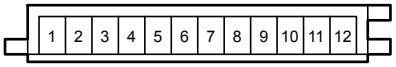

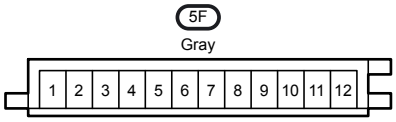
5F
Gray
1 2 3 4 5 6 7 8 9 10 11 12

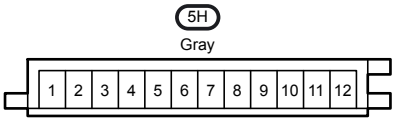
5H
Gray
1 2 3 4 5 6 7 8 9 10 11 12

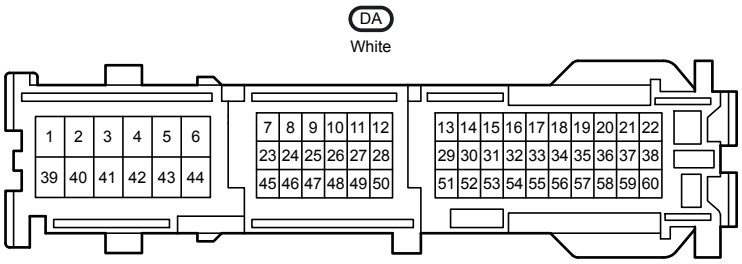
DA
White
1 2 3 4 5 6
39 40 41 42 43 44
7 8 9 10 11 12
23 24 25 26 27 28
45 46 47 48 49 50
13 14 15 16 17 18 19 20 21 22
29 30 31 32 33 34 35 36 37 38
51 52 53 54 55 56 57 58 59 60

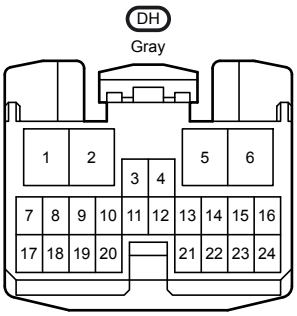
DH
Gray
1 2 3 4 5 6
7 8 9 10 11 12 13 14 15 16
17 18 19 20 21 22 23 24

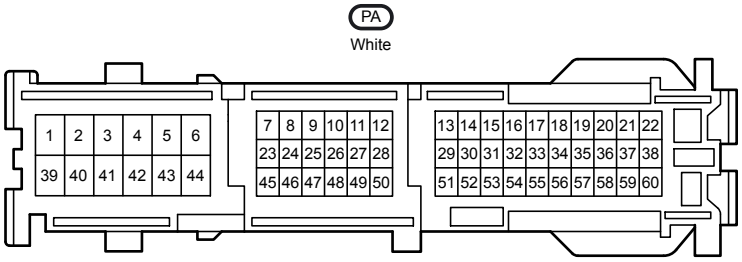
PA
White
1 2 3 4 5 6
39 40 41 42 43 44
7 8 9 10 11 12
23 24 25 26 27 28
45 46 47 48 49 50
13 14 15 16 17 18 19 20 21 22
29 30 31 32 33 34 35 36 37 38
51 52 53 54 55 56 57 58 59 60

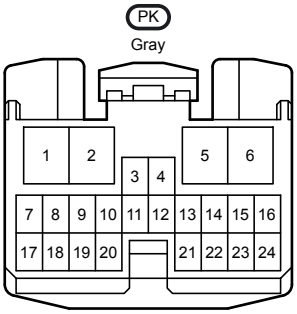
PK
Gray
1 2 3 4 5 6
7 8 9 10 11 12 13 14 15 16
17 18 19 20 21 22 23 24

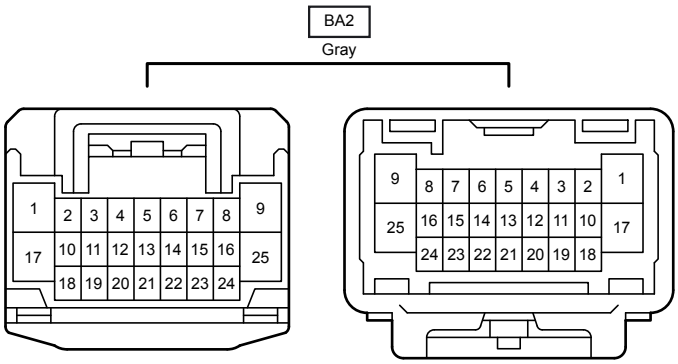
BA2
Gray
1 2 3 4 5 6 7 8 9
17 10 11 12 13 14 15 16 25
18 19 20 21 22 23 24
9 8 7 6 5 4 3 2 1
25 16 15 14 13 12 11 10 17
24 23 22 21 20 19 18

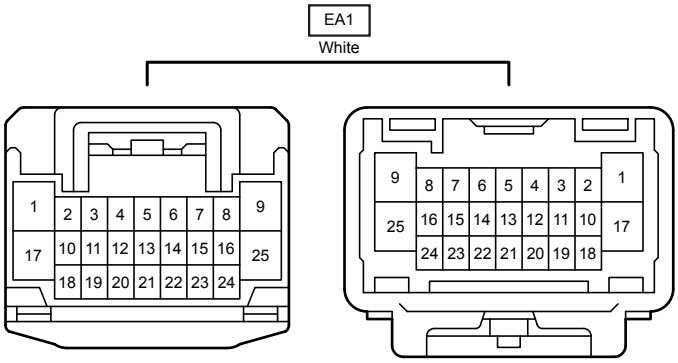
EA1
White
1 2 3 4 5 6 7 8 9
17 10 11 12 13 14 15 16 25
18 19 20 21 22 23 24
9 8 7 6 5 4 3 2 1
25 16 15 14 13 12 11 10 17
24 23 22 21 20 19 18

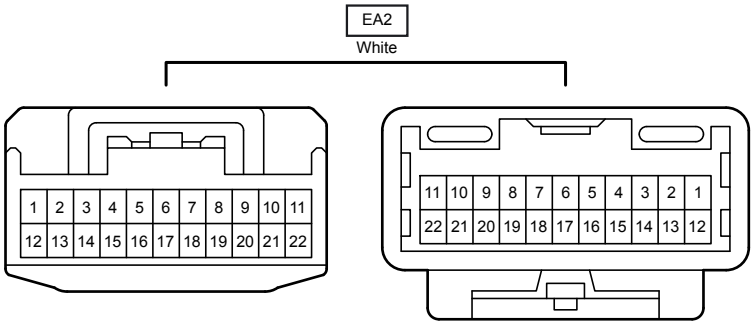
EA2
White
1 2 3 4 5 6 7 8 9 10 11
12 13 14 15 16 17 18 19 20 21 22
11 10 9 8 7 6 5 4 3 2 1
22 21 20 19 18 17 16 15 14 13 12

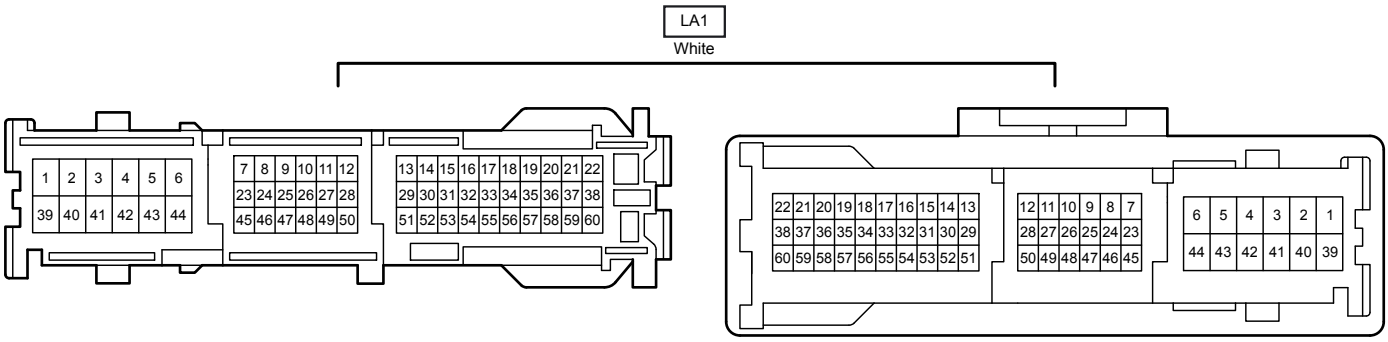
LA1
White
1 2 3 4 5 6
39 40 41 42 43 44
7 8 9 10 11 12
23 24 25 26 27 28
45 46 47 48 49 50
13 14 15 16 17 18 19 20 21 22
29 30 31 32 33 34 35 36 37 38
51 52 53 54 55 56 57 58 59 60
22 21 20 19 18 17 16 15 14 13
38 37 36 35 34 33 32 31 30 29
60 59 58 57 56 55 54 53 52 51
12 11 10 9 8 7
28 27 26 25 24 23
50 49 48 47 46 45
6 5 4 3 2 1
44 43 42 41 40 39

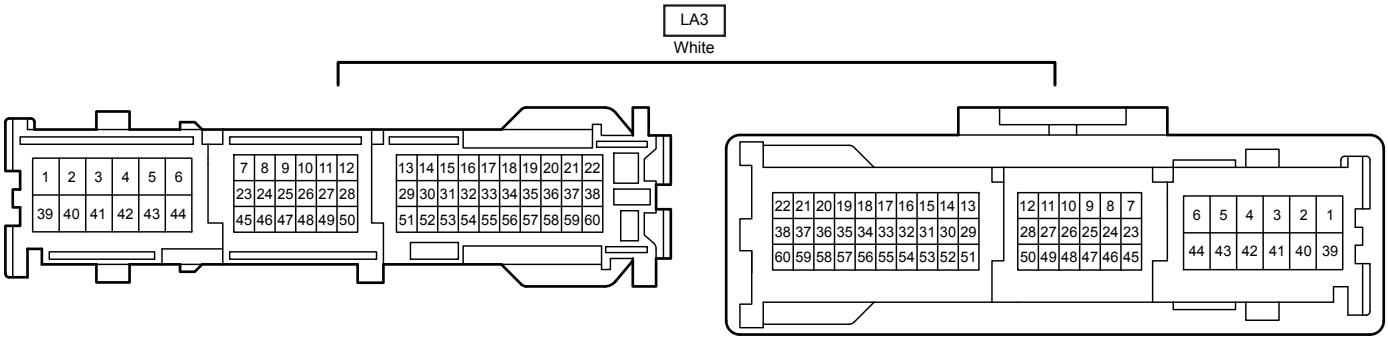
LA3
White
1 2 3 4 5 6
39 40 41 42 43 44
7 8 9 10 11 12
23 24 25 26 27 28
45 46 47 48 49 50
13 14 15 16 17 18 19 20 21 22
29 30 31 32 33 34 35 36 37 38
51 52 53 54 55 56 57 58 59 60
22 21 20 19 18 17 16 15 14 13
38 37 36 35 34 33 32 31 30 29
60 59 58 57 56 55 54 53 52 51
12 11 10 9 8 7
28 27 26 25 24 23
50 49 48 47 46 45
6 5 4 3 2 1
44 43 42 41 40 39