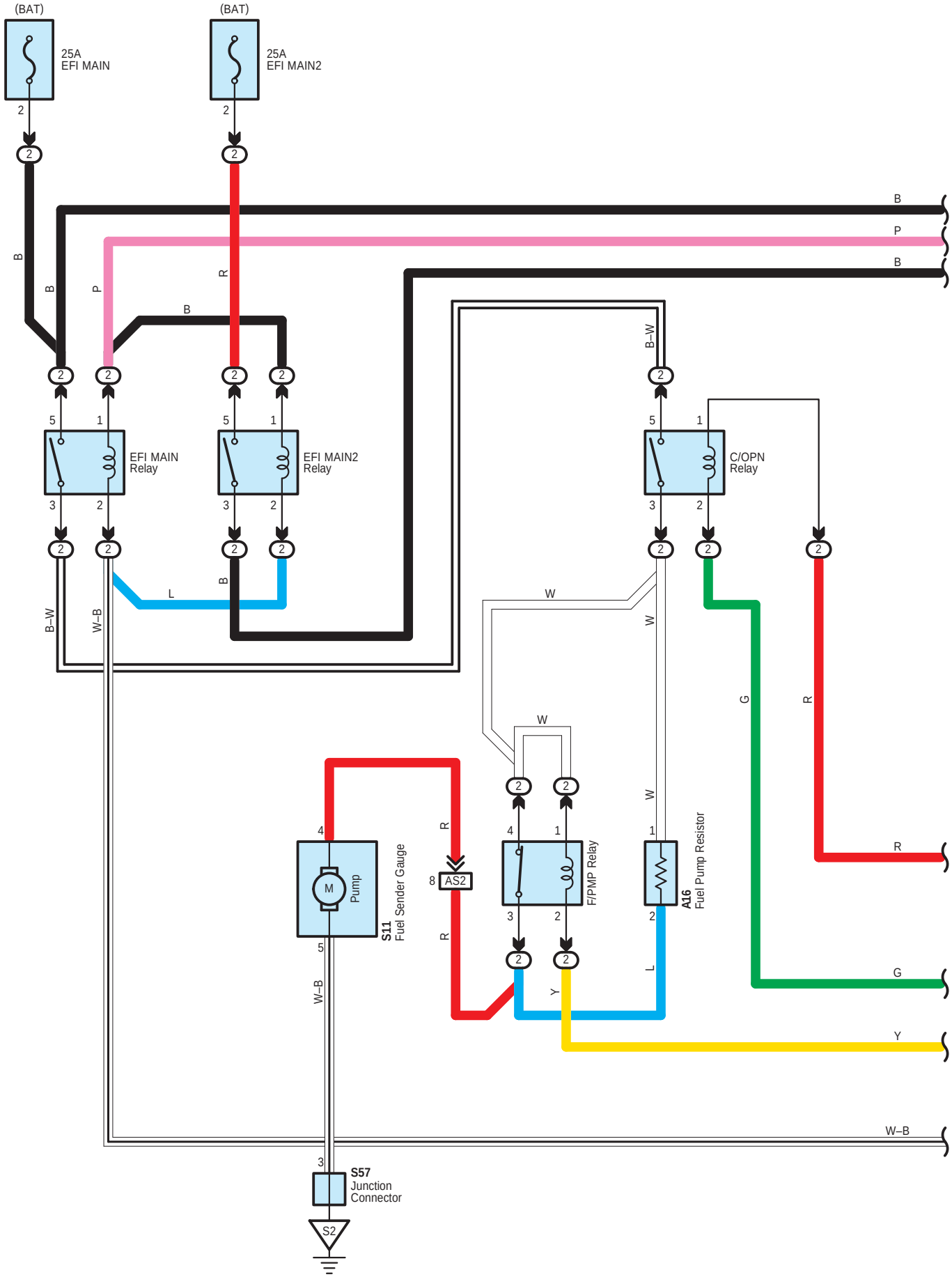
(BAT)
25A
EFI MAIN
(BAT)
25A
EFI MAIN2
EFI MAIN
Relay
EFI MAIN2
Relay
C/OPN
Relay
F/PMP Relay
A16
Fuel Pump Resistor
S11
Fuel Sender Gauge
Pump
AS2
S57
Junction
Connector
S2
B
P
R
L
W
G
Y
B–W
W–B

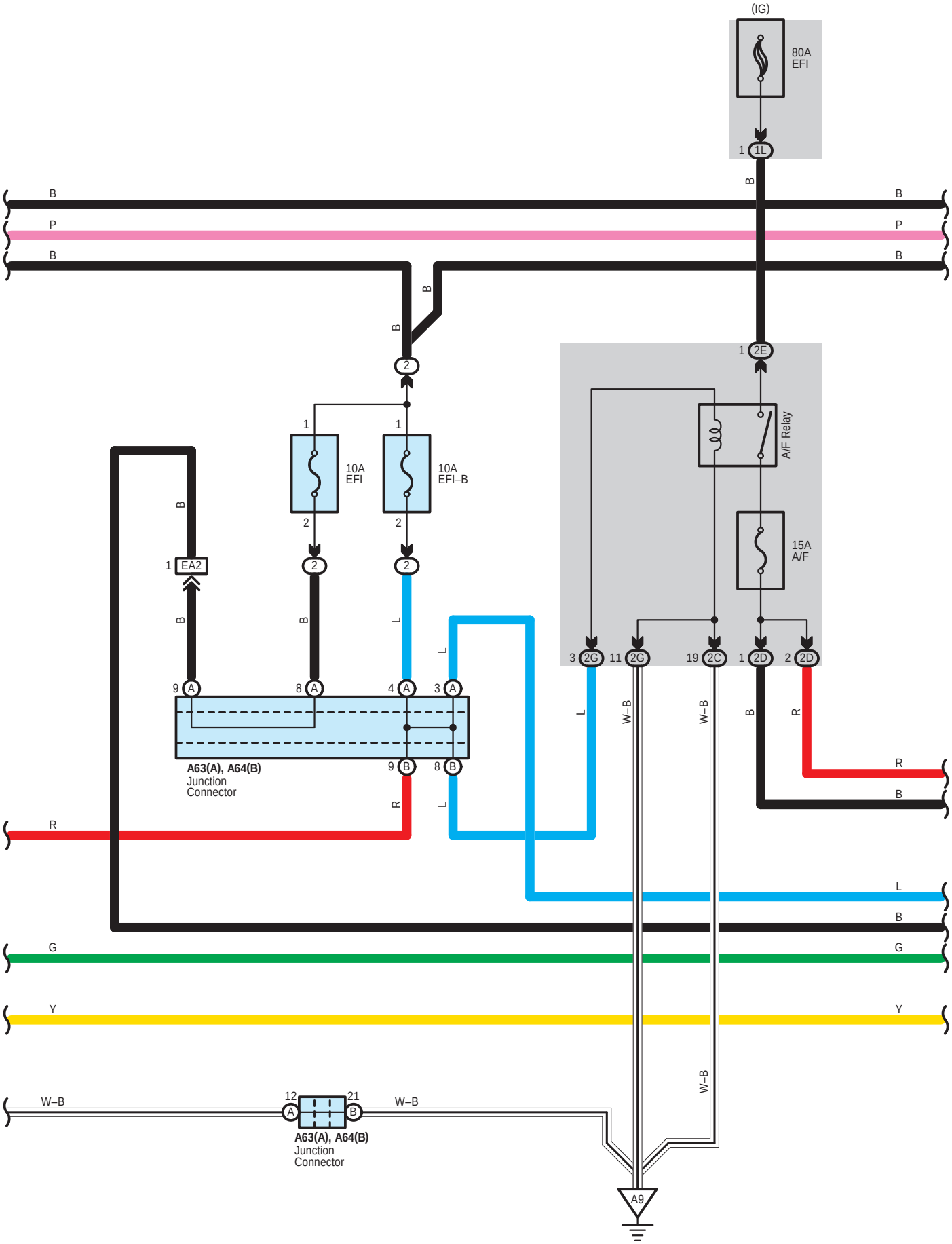
(IG)
80A
EFI
1 1L
B
P
2
1 2E
A/F Relay
15A
A/F
10A
EFI
10A
EFI–B
1 EA2
3 2G
11 2G
19 2C
1 2D
2 2D
9 A
8 A
4 A
3 A
9 B
8 B
A63(A), A64(B)
Junction
Connector
R
L
W–B
G
Y
12 A
21 B
A63(A), A64(B)
Junction
Connector
A9

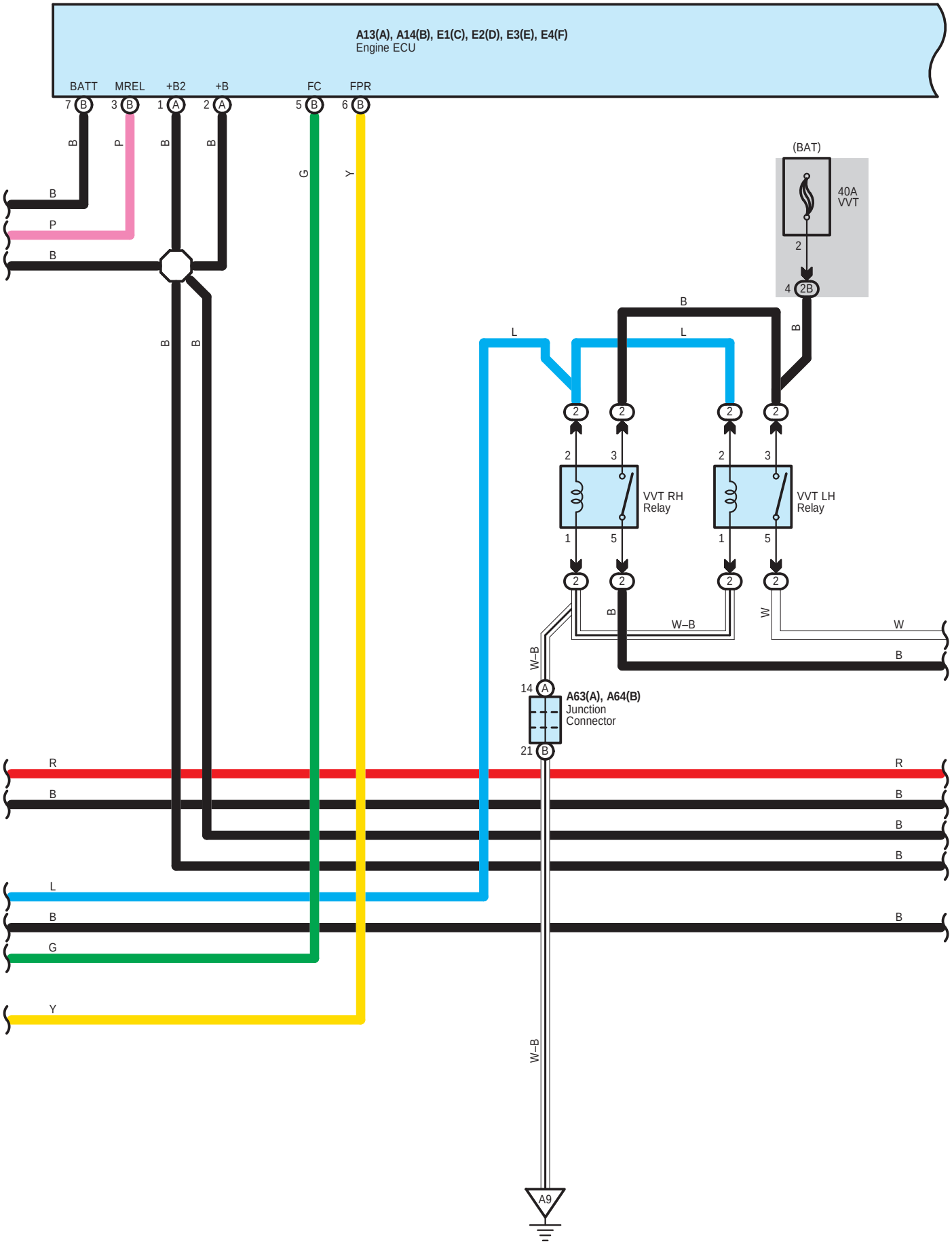
A13(A), A14(B), E1(C), E2(D), E3(E), E4(F)
Engine ECU
BATT
MREL
+B2
+B
FC
FPR
7 B
3 B
1 A
2 A
5 B
6 B
(BAT)
40A
VVT
2
4 2B
VVT RH
Relay
VVT LH
Relay
W–B
A63(A), A64(B)
Junction
Connector
14 A
21 B
A9

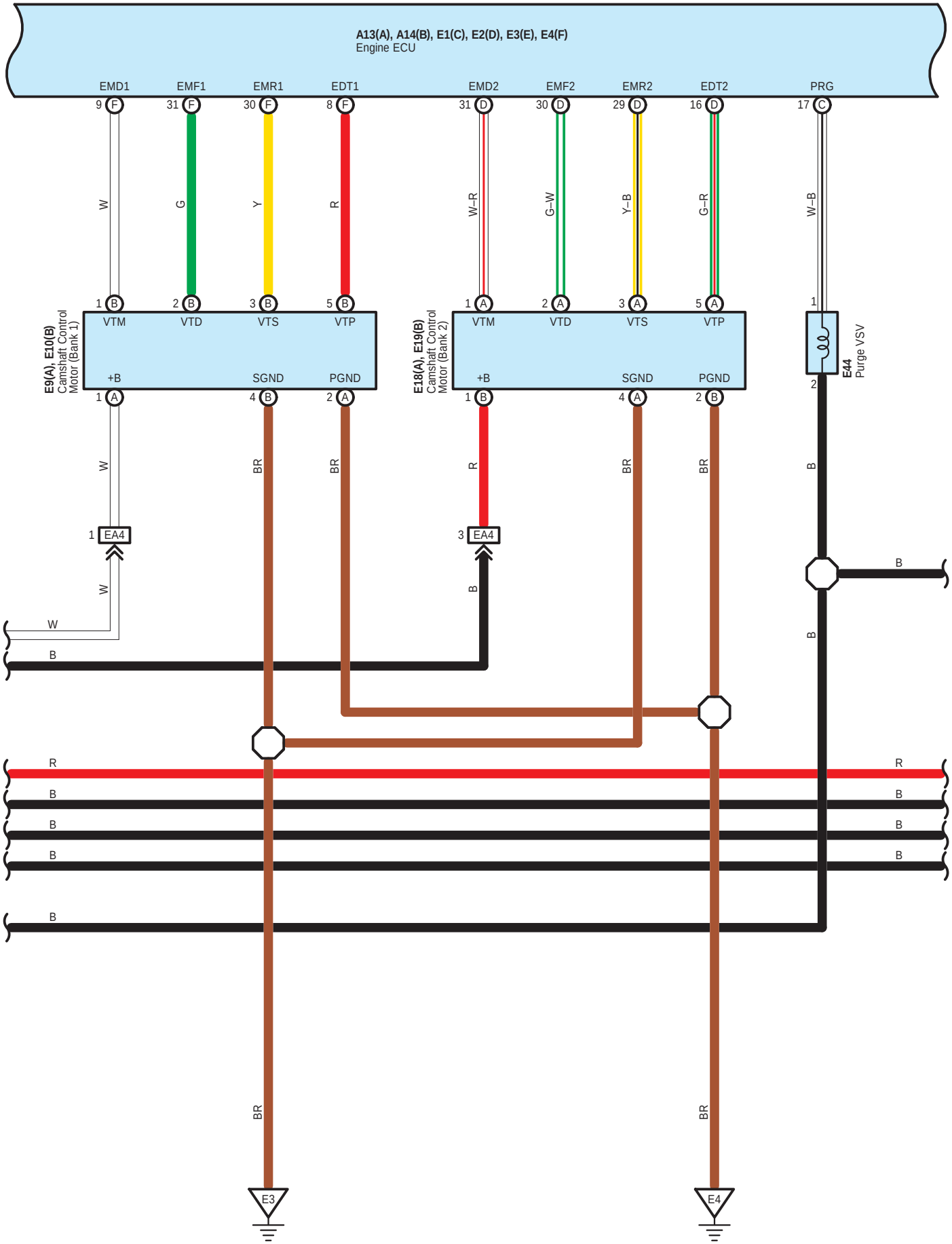
A13(A), A14(B), E1(C), E2(D), E3(E), E4(F)
Engine ECU
EMD1
EMF1
EMR1
EDT1
EMD2
EMF2
EMR2
EDT2
PRG
9 F
31 F
30 F
8 F
31 D
30 D
29 D
16 D
17 C
W
G
Y
R
W–R
G–W
Y–B
G–R
W–B
1 B
2 B
3 B
5 B
1 A
2 A
3 A
5 A
1
E9(A), E10(B)
Camshaft Control
Motor (Bank 1)
VTM
VTD
VTS
VTP
+B
SGND
PGND
E18(A), E19(B)
Camshaft Control
Motor (Bank 2)
E44
Purge VSV
2
1 A
4 B
2 A
1 B
4 A
2 B
BR
B
1 EA4
3 EA4
E3
E4

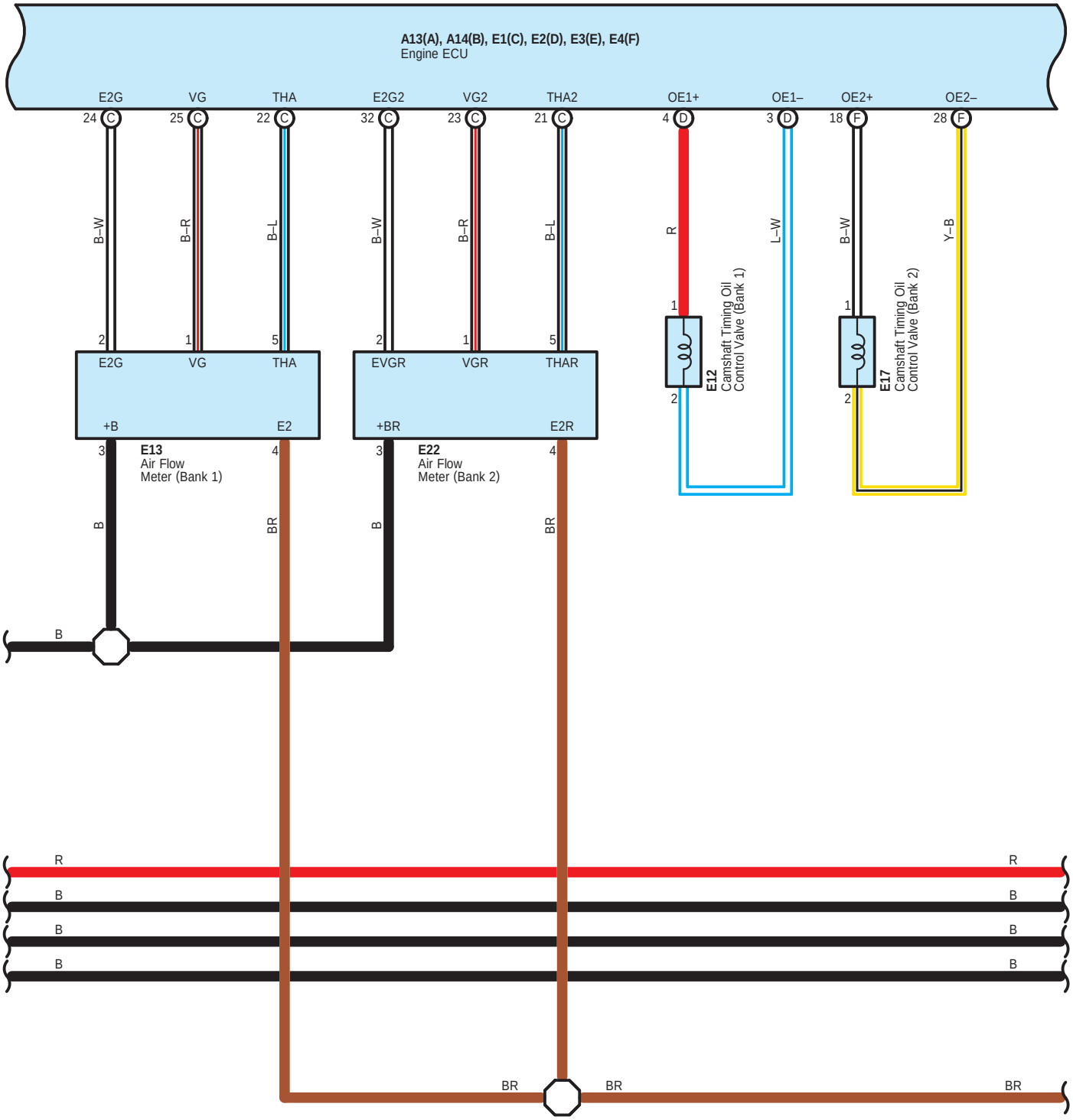
A13(A), A14(B), E1(C), E2(D), E3(E), E4(F)
Engine ECU
E2G
VG
THA
E2G2
VG2
THA2
OE1+
OE1–
OE2+
OE2–
24 C
25 C
22 C
32 C
23 C
21 C
4 D
3 D
18 F
28 F
B–W
B–R
B–L
B–W
B–R
B–L
R
L–W
B–W
Y–B
2
1
5
2
1
5
1
2
1
2
E2G
VG
THA
EVGR
VGR
THAR
+B
E2
+BR
E2R
E12
Camshaft Timing Oil
Control Valve (Bank 1)
E17
Camshaft Timing Oil
Control Valve (Bank 2)
3
4
3
4
E13
Air Flow
Meter (Bank 1)
E22
Air Flow
Meter (Bank 2)
B
BR
B
BR
B
R
B
B
B
R
B
B
B
BR
BR
BR

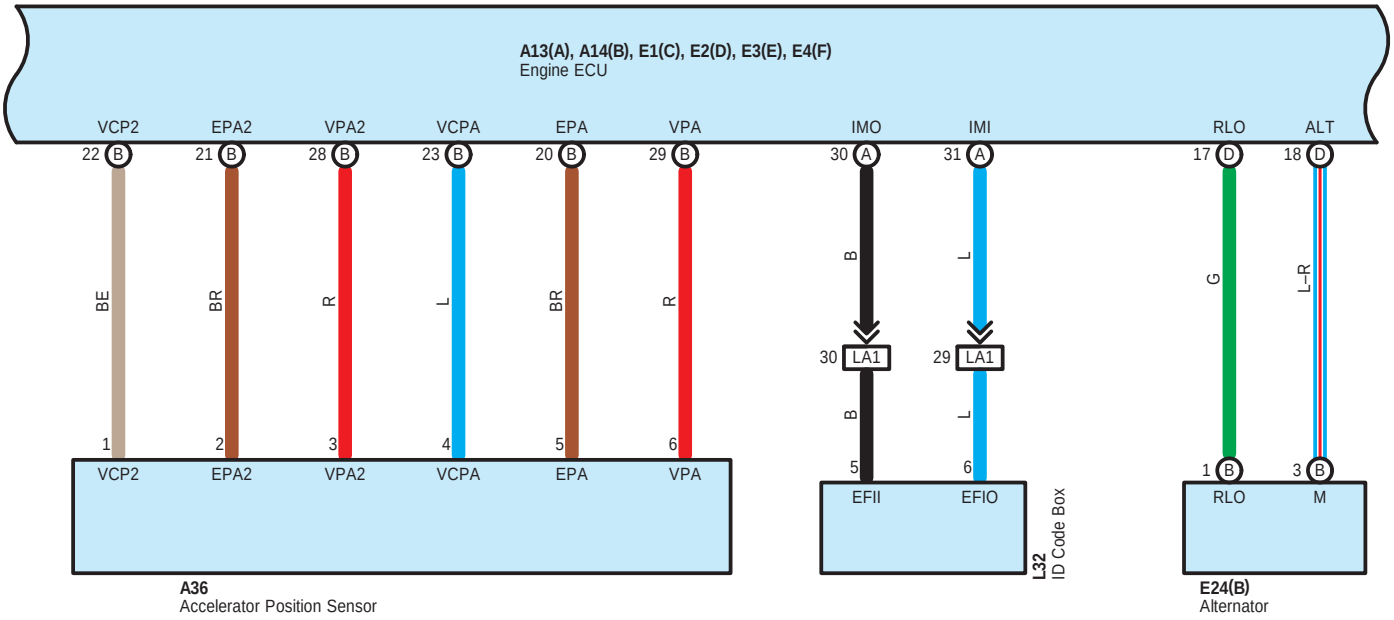
A13(A), A14(B), E1(C), E2(D), E3(E), E4(F)
Engine ECU
VCP2
EPA2
VPA2
VCPA
EPA
VPA
IMO
IMI
RLO
ALT
22 B
21 B
28 B
23 B
20 B
29 B
30 A
31 A
17 D
18 D
BE
BR
R
L
BR
R
B
L
G
L–R
30 LA1
29 LA1
B
L
1
2
3
4
5
6
5
6
1 B
3 B
VCP2
EPA2
VPA2
VCPA
EPA
VPA
EFII
EFIO
RLO
M
A36
Accelerator Position Sensor
L32
ID Code Box
E24(B)
Alternator

R
R
B
B
B
B
B
B
BR
BR

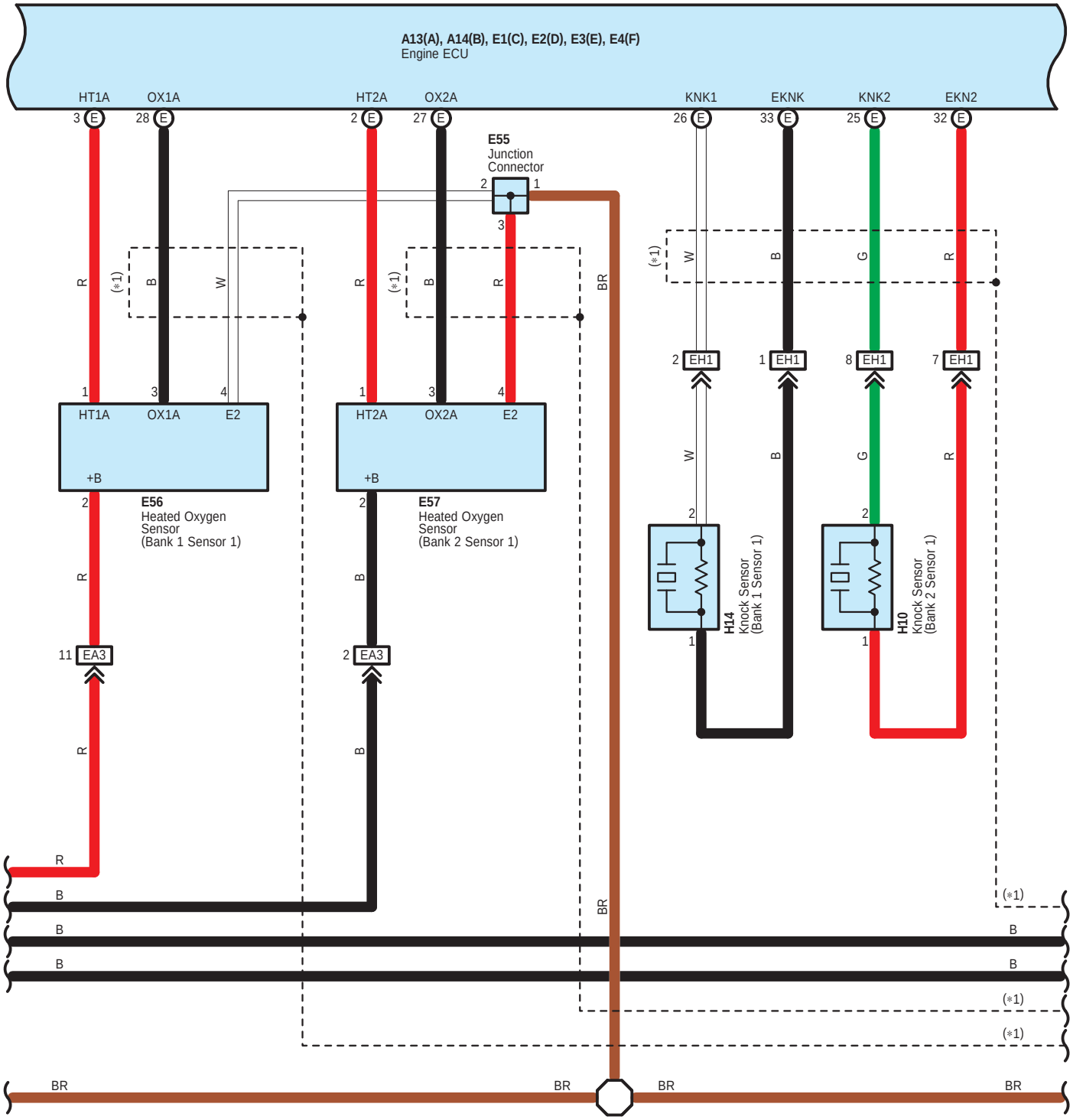
A13(A), A14(B), E1(C), E2(D), E3(E), E4(F)
Engine ECU
HT1A
OX1A
HT2A
OX2A
KNK1
EKNK
KNK2
EKN2
E55
Junction Connector
E56
Heated Oxygen Sensor (Bank 1 Sensor 1)
E57
Heated Oxygen Sensor (Bank 2 Sensor 1)
EH1
EA3
H14
Knock Sensor (Bank 1 Sensor 1)
H10
Knock Sensor (Bank 2 Sensor 1)
+B
E2
(*1)

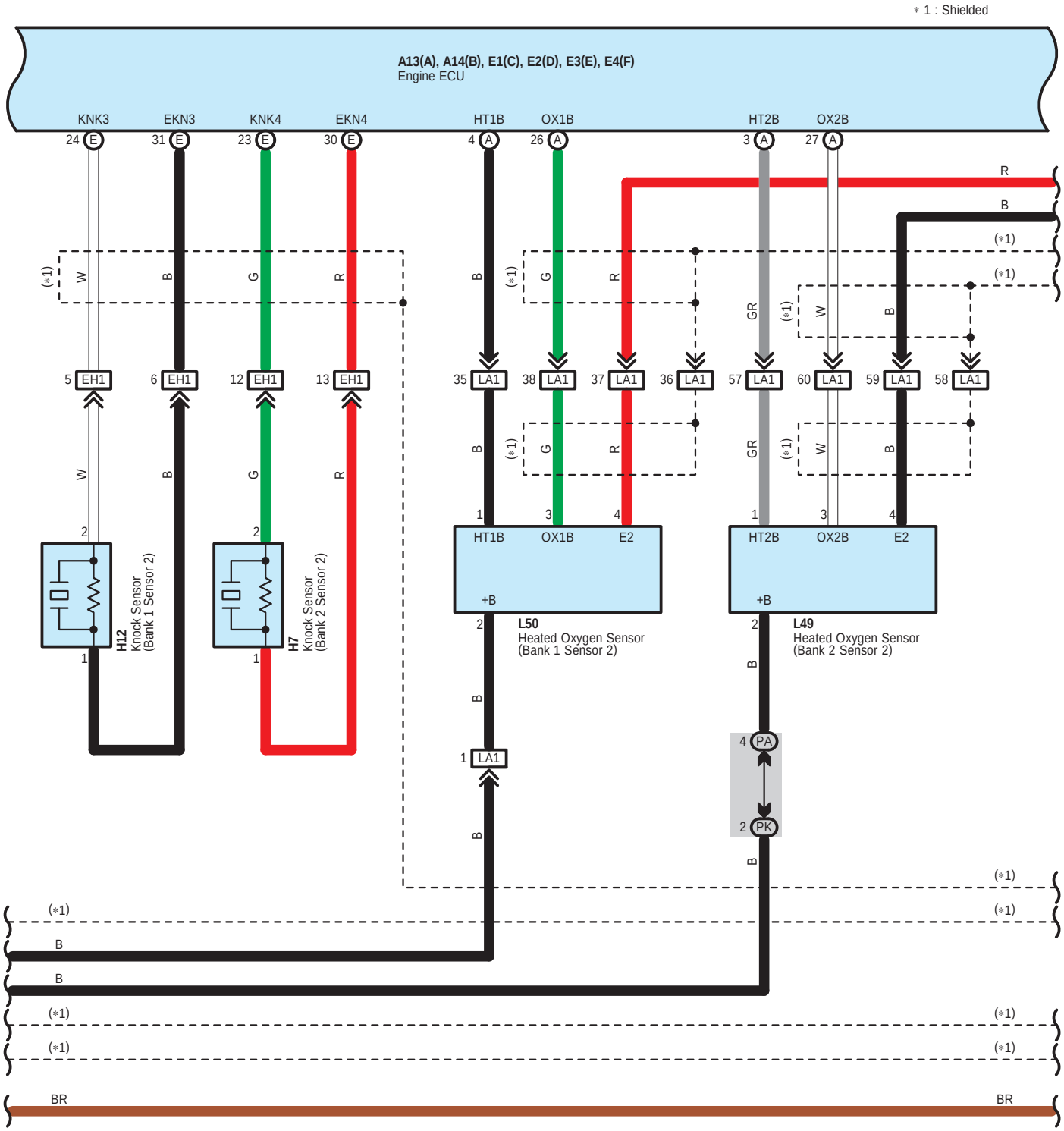
∗1 : Shielded
A13(A), A14(B), E1(C), E2(D), E3(E), E4(F)
Engine ECU
KNK3
EKN3
KNK4
EKN4
HT1B
OX1B
HT2B
OX2B
24 E
31 E
23 E
30 E
4 A
26 A
3 A
27 A
5 EH1
6 EH1
12 EH1
13 EH1
35 LA1
38 LA1
37 LA1
36 LA1
57 LA1
60 LA1
59 LA1
58 LA1
H12
Knock Sensor
(Bank 1 Sensor 2)
H7
Knock Sensor
(Bank 2 Sensor 2)
HT1B
OX1B
E2
+B
L50
Heated Oxygen Sensor
(Bank 1 Sensor 2)
HT2B
OX2B
E2
+B
L49
Heated Oxygen Sensor
(Bank 2 Sensor 2)
1 LA1
4 PA
2 PK
(∗1)
W
B
G
R
GR
BR

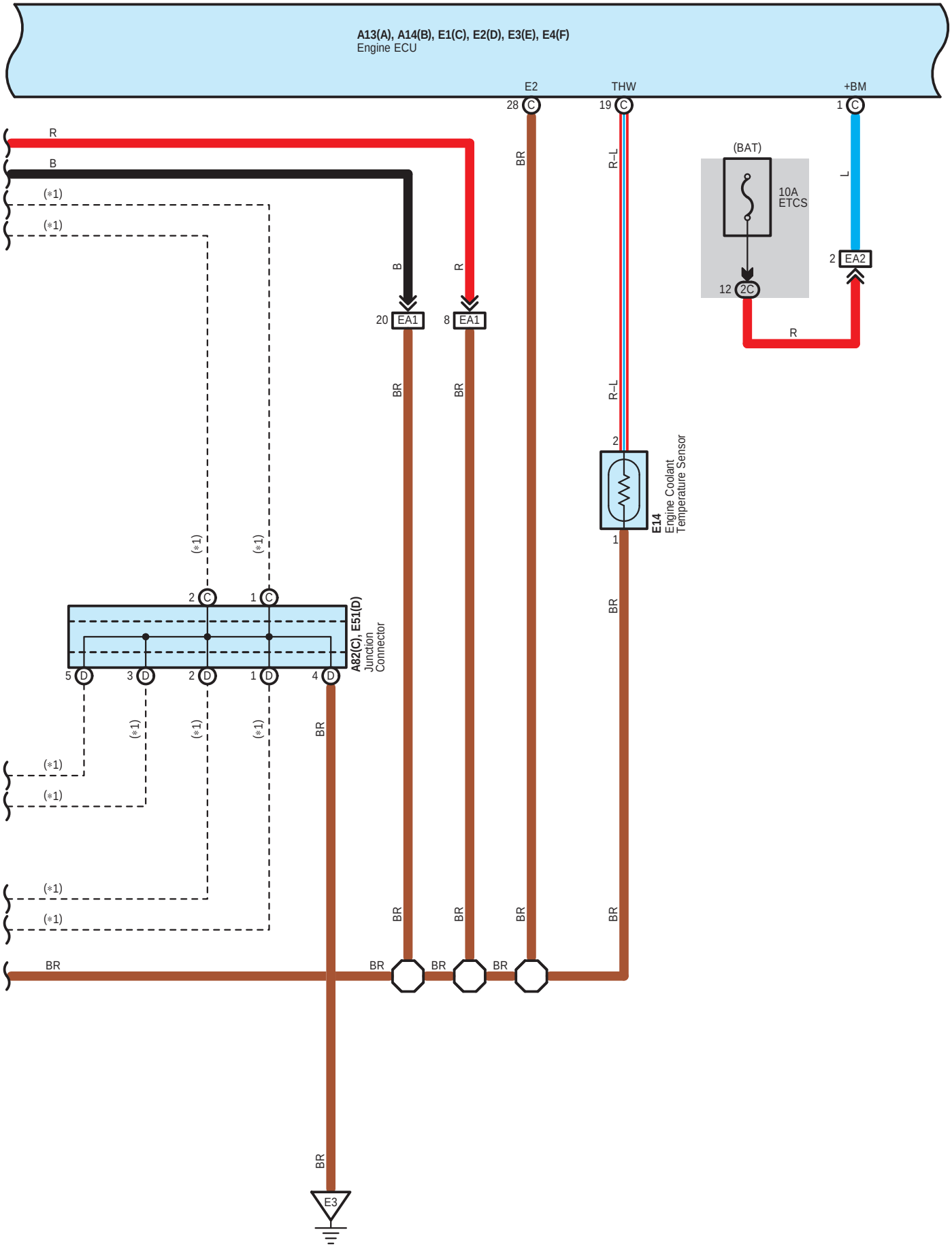
A13(A), A14(B), E1(C), E2(D), E3(E), E4(F)
Engine ECU
E2
THW
+BM
28 C
19 C
1 C
R
B
(*1)
(*1)
BR
R–L
L
(BAT)
10A
ETCS
2 EA2
12 2C
R
B
R
20 EA1
8 EA1
BR
BR
R–L
2
1
E14
Engine Coolant
Temperature Sensor
(*1)
(*1)
2 C
1 C
A82(C), E51(D)
Junction
Connector
5 D
3 D
2 D
1 D
4 D
(*1)
(*1)
(*1)
(*1)
BR
(*1)
(*1)
(*1)
(*1)
BR
BR
BR
BR
BR
BR
BR
BR
BR
BR
E3

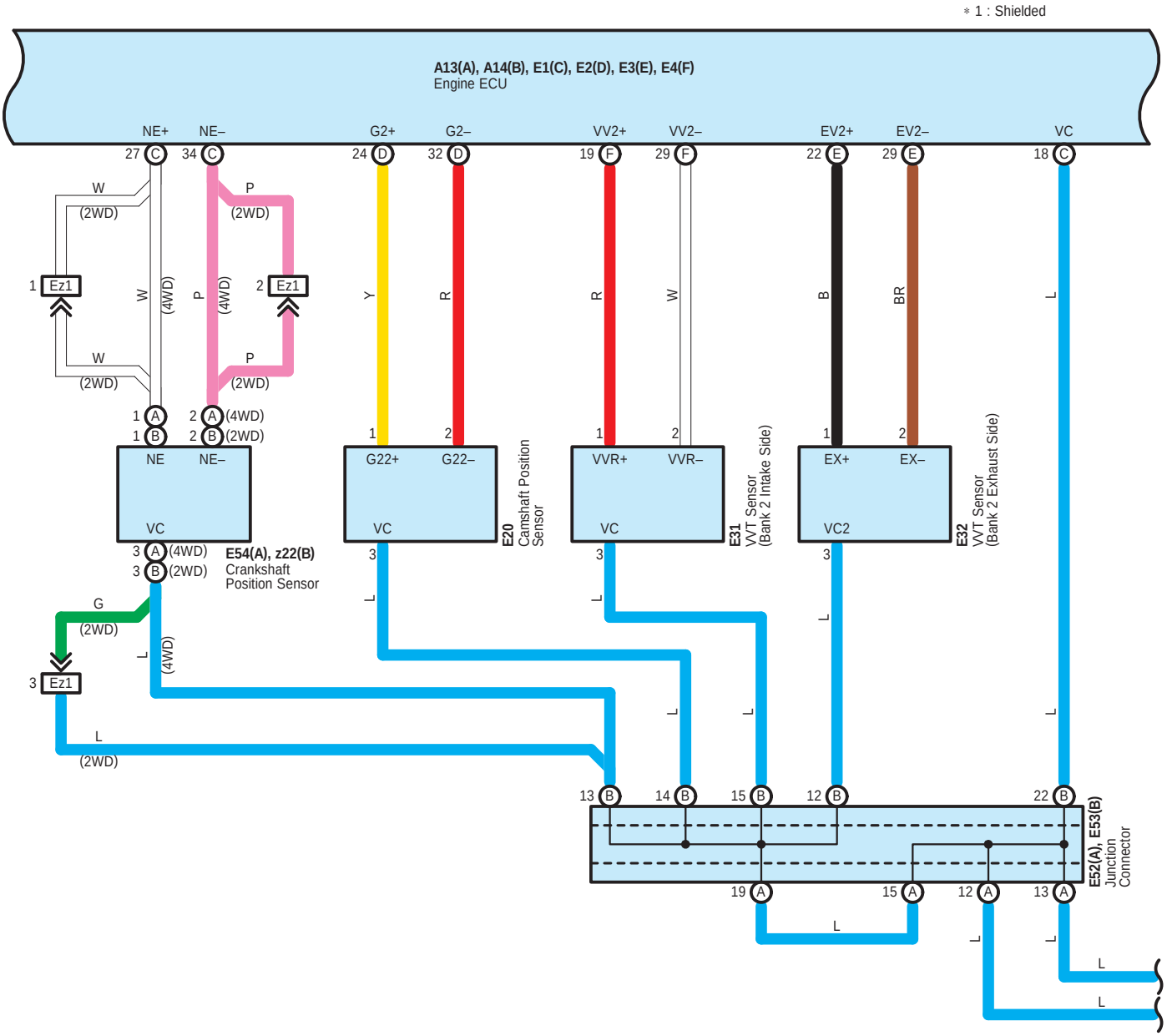
∗ 1 : Shielded
A13(A), A14(B), E1(C), E2(D), E3(E), E4(F)
Engine ECU
NE+
NE–
G2+
G2–
VV2+
VV2–
EV2+
EV2–
VC
27 C
34 C
24 D
32 D
19 F
29 F
22 E
29 E
18 C
W
(2WD)
P
(2WD)
1 Ez1
2 Ez1
W
(4WD)
P
(4WD)
Y
R
R
W
B
BR
L
W
(2WD)
P
(2WD)
1 A
1 B
2 A (4WD)
2 B (2WD)
NE
NE–
VC
3 A (4WD)
3 B (2WD)
E54(A), z22(B)
Crankshaft
Position Sensor
G22+
G22–
VC
E20
Camshaft Position
Sensor
VVR+
VVR–
VC
E31
VVT Sensor
(Bank 2 Intake Side)
EX+
EX–
VC2
E32
VVT Sensor
(Bank 2 Exhaust Side)
G
(2WD)
3 Ez1
L
(4WD)
L
(2WD)
13 B
14 B
15 B
12 B
22 B
19 A
15 A
12 A
13 A
E52(A), E53(B)
Junction
Connector

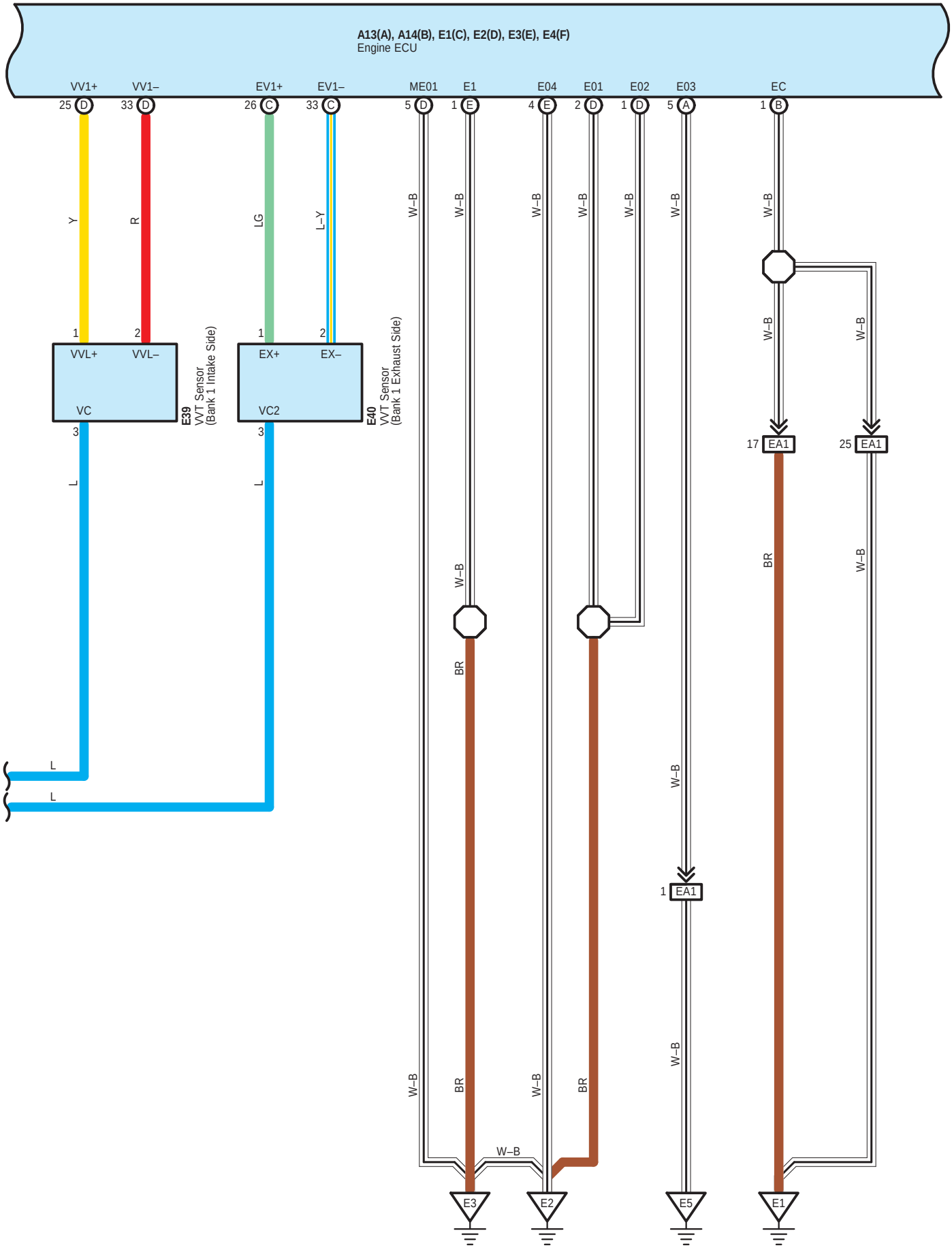
A13(A), A14(B), E1(C), E2(D), E3(E), E4(F)
Engine ECU
VV1+
VV1–
EV1+
EV1–
ME01
E1
E04
E01
E02
E03
EC
25 D
33 D
26 C
33 C
5 D
1 E
4 E
2 D
1 D
5 A
1 B
Y
R
LG
L–Y
W–B
BR
L
1
2
VVL+
VVL–
VC
3
E39
VVT Sensor
(Bank 1 Intake Side)
EX+
EX–
VC2
E40
VVT Sensor
(Bank 1 Exhaust Side)
17 EA1
25 EA1
1 EA1
E3
E2
E5
E1

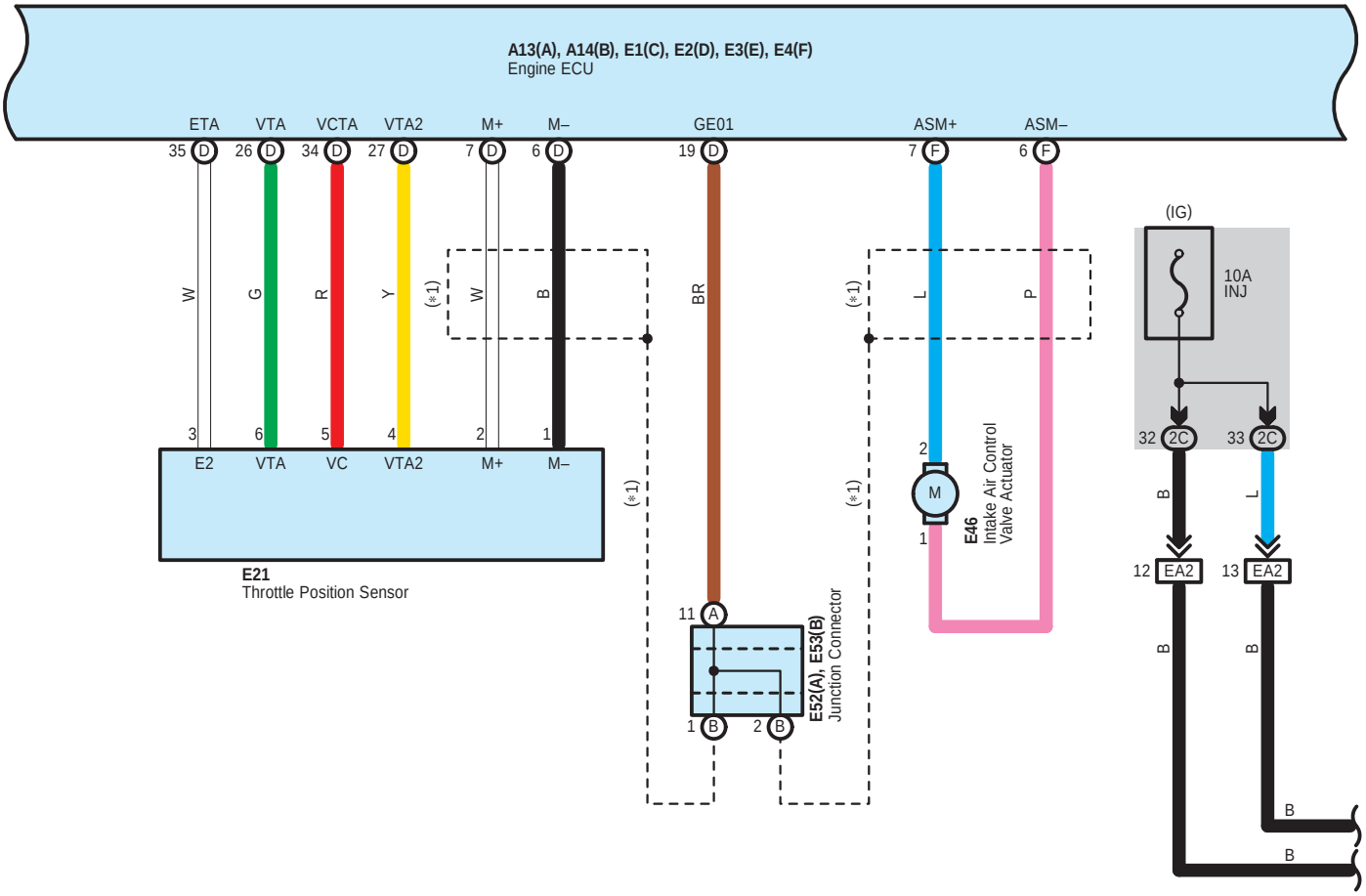
A13(A), A14(B), E1(C), E2(D), E3(E), E4(F)
Engine ECU
ETA
VTA
VCTA
VTA2
M+
M–
GE01
ASM+
ASM–
35 D
26 D
34 D
27 D
7 D
6 D
19 D
7 F
6 F
W
G
R
Y
(*1)
W
B
BR
(*1)
L
P
(IG)
10A
INJ
3
6
5
4
2
1
2
1
32 2C
33 2C
E2
VTA
VC
VTA2
M+
M–
(*1)
(*1)
M
E46
Intake Air Control
Valve Actuator
B
L
E21
Throttle Position Sensor
11 A
12 EA2
13 EA2
E52(A), E53(B)
Junction Connector
1 B
2 B
B
B
B
B

∗ 1 : Shielded

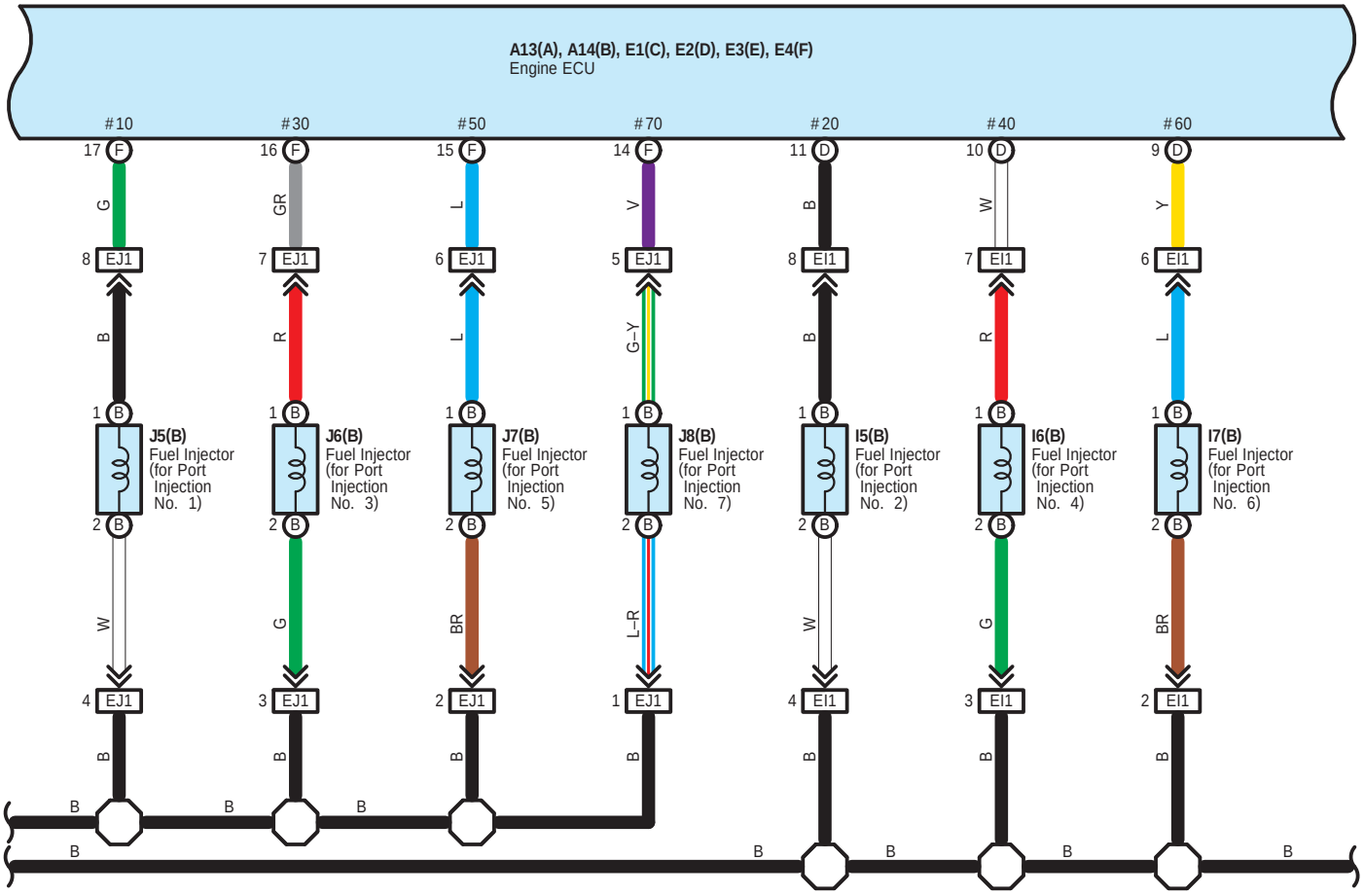
A13(A), A14(B), E1(C), E2(D), E3(E), E4(F)
Engine ECU
#10
#30
#50
#70
#20
#40
#60
J5(B)
Fuel Injector
(for Port
Injection
No. 1)
J6(B)
Fuel Injector
(for Port
Injection
No. 3)
J7(B)
Fuel Injector
(for Port
Injection
No. 5)
J8(B)
Fuel Injector
(for Port
Injection
No. 7)
I5(B)
Fuel Injector
(for Port
Injection
No. 2)
I6(B)
Fuel Injector
(for Port
Injection
No. 4)
I7(B)
Fuel Injector
(for Port
Injection
No. 6)
EJ1
EI1
G
GR
L
V
B
W
Y
R
G–Y
L–R
BR

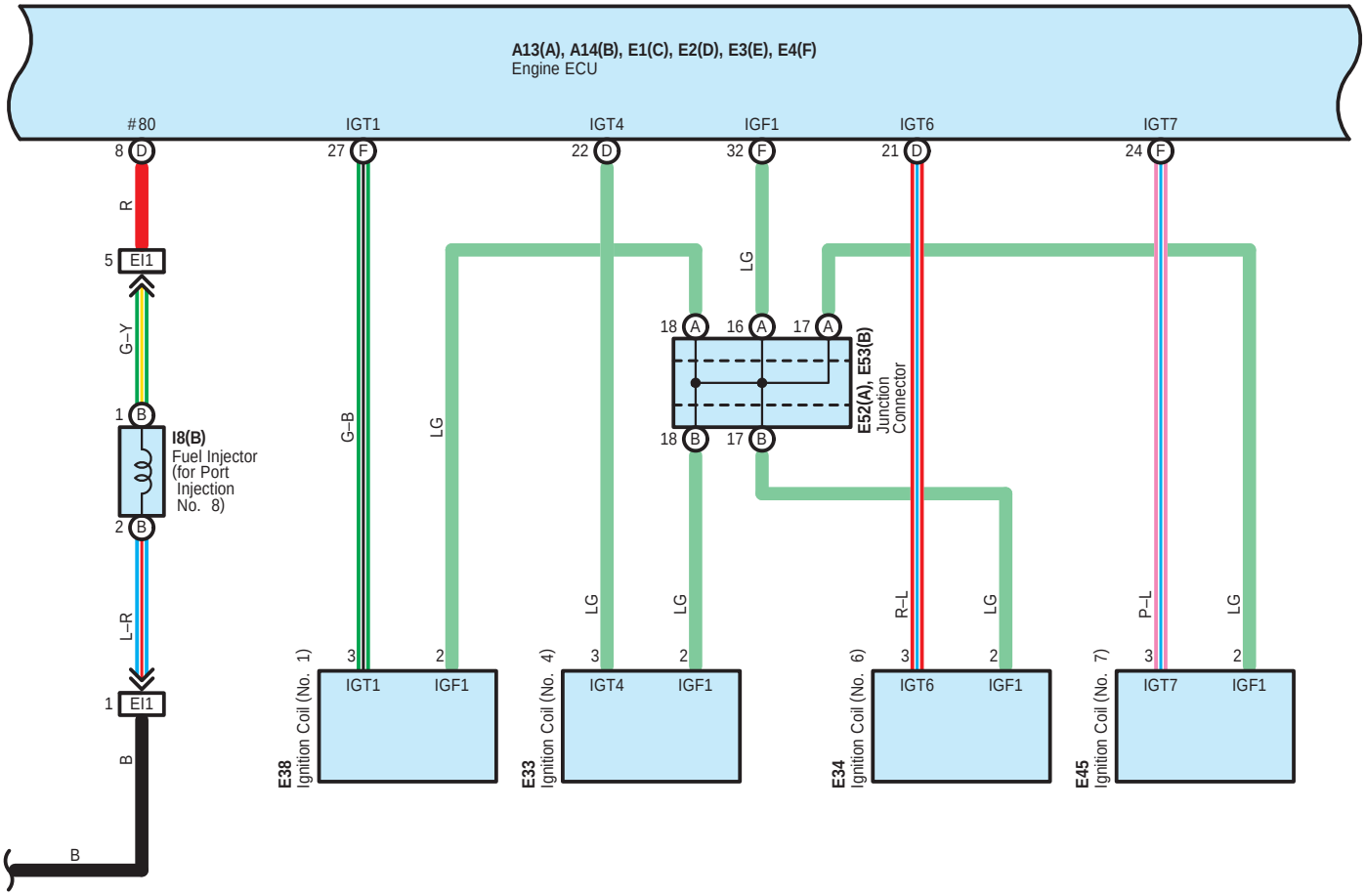
A13(A), A14(B), E1(C), E2(D), E3(E), E4(F)
Engine ECU
#80
IGT1
IGT4
IGF1
IGT6
IGT7
8 D
27 F
22 D
32 F
21 D
24 F
R
5 EI1
G–Y
1 B
I8(B)
Fuel Injector
(for Port
Injection
No. 8)
2 B
L–R
1 EI1
B
B
G–B
LG
LG
LG
18 A
16 A
17 A
18 B
17 B
E52(A), E53(B)
Junction
Connector
LG
LG
R–L
LG
P–L
LG
3
2
IGT1
IGF1
E38
Ignition Coil (No. 1)
IGT4
IGF1
E33
Ignition Coil (No. 4)
IGT6
IGF1
E34
Ignition Coil (No. 6)
IGT7
IGF1
E45
Ignition Coil (No. 7)

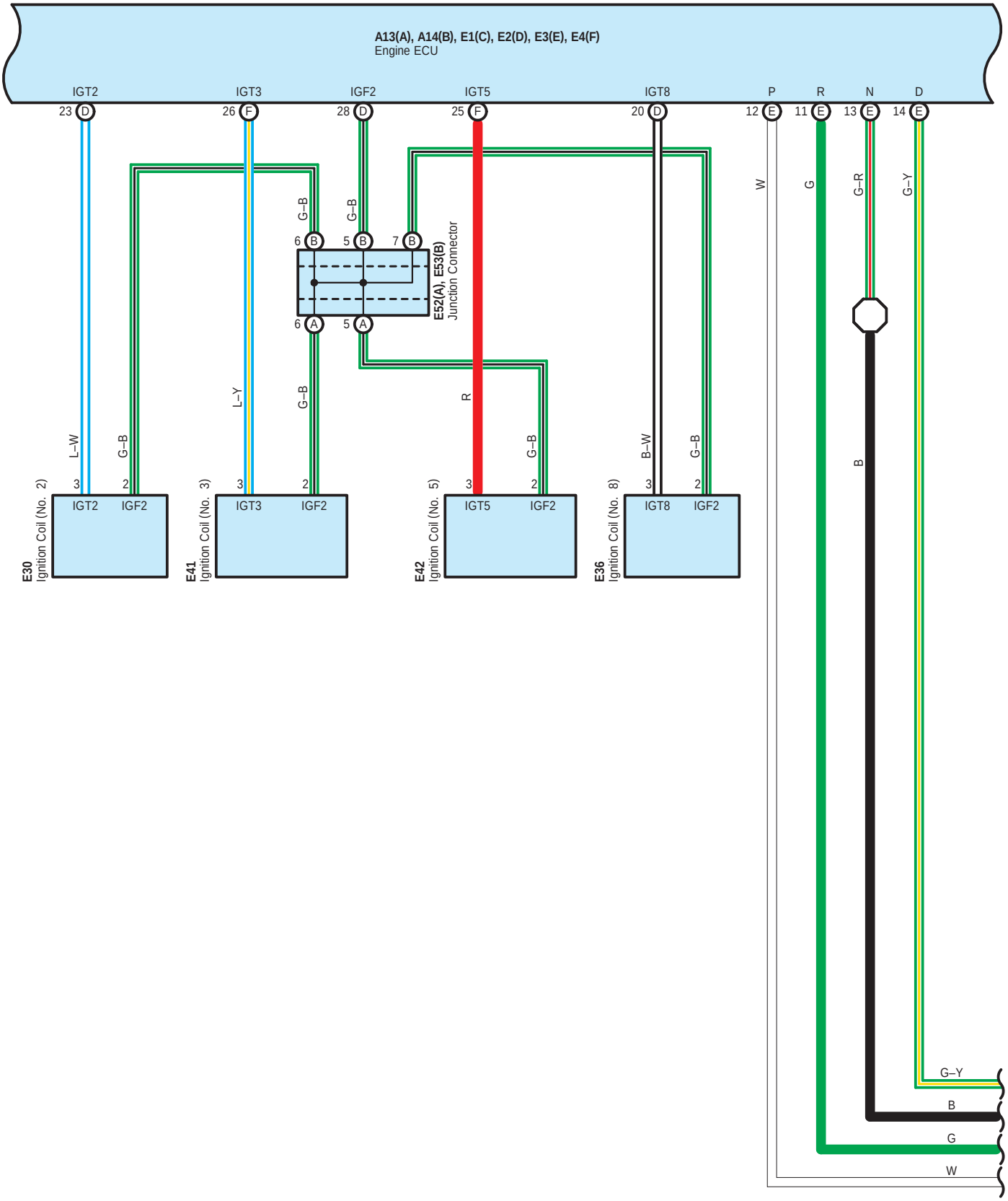
A13(A), A14(B), E1(C), E2(D), E3(E), E4(F)
Engine ECU
IGT2
IGT3
IGF2
IGT5
IGT8
P
R
N
D
23 D
26 F
28 D
25 F
20 D
12 E
11 E
13 E
14 E
W
G
G–R
G–Y
G–B
G–B
6 B
5 B
7 B
E52(A), E53(B)
Junction Connector
6 A
5 A
L–Y
G–B
R
G–B
B–W
G–B
L–W
G–B
B
3
2
IGT2
IGF2
E30
Ignition Coil (No. 2)
3
2
IGT3
IGF2
E41
Ignition Coil (No. 3)
3
2
IGT5
IGF2
E42
Ignition Coil (No. 5)
3
2
IGT8
IGF2
E36
Ignition Coil (No. 8)
G–Y
B
G
W

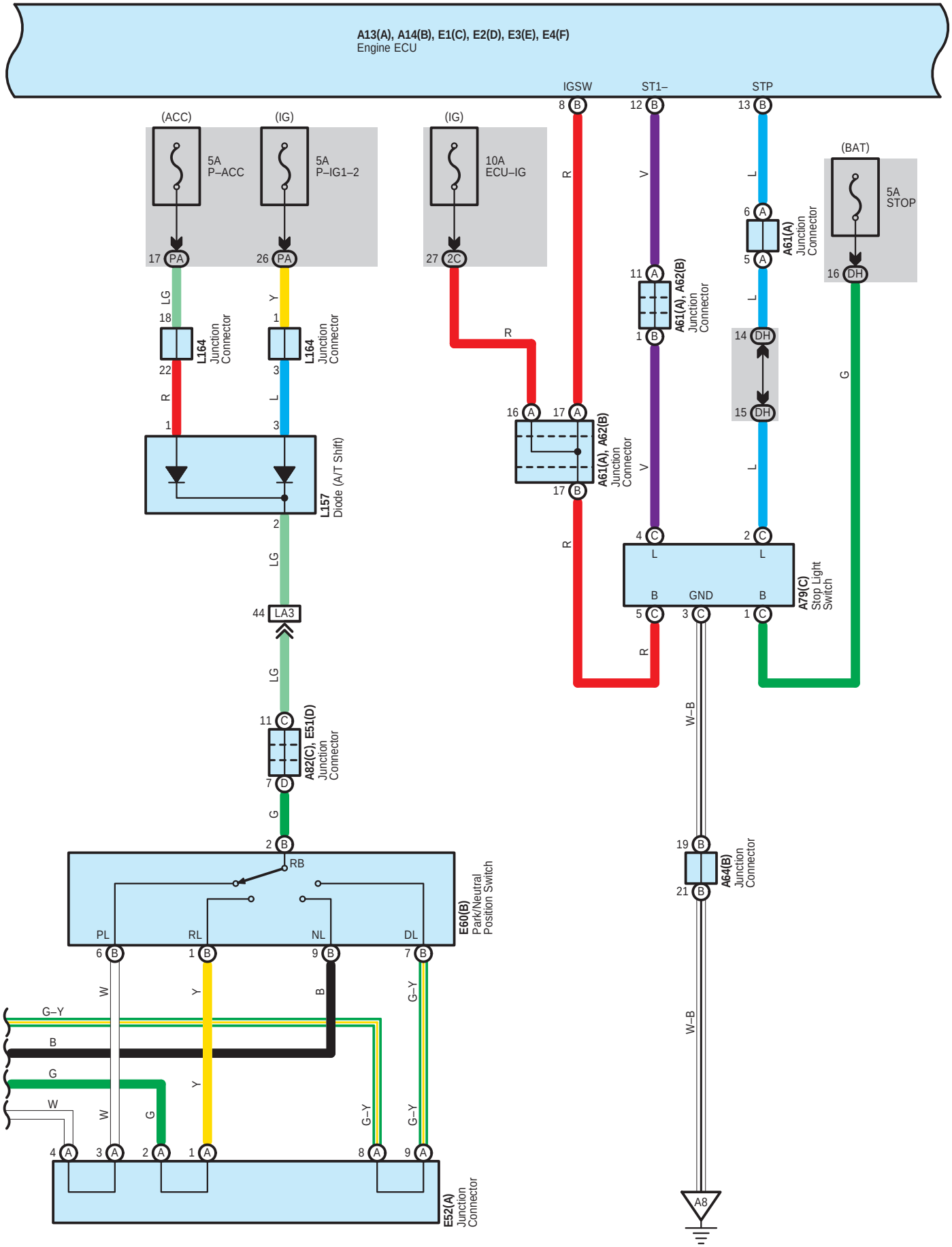
A13(A), A14(B), E1(C), E2(D), E3(E), E4(F)
Engine ECU
IGSW
ST1–
STP
(ACC)
(IG)
(IG)
(BAT)
5A
P–ACC
5A
P–IG1–2
10A
ECU–IG
5A
STOP
L164
Junction
Connector
L157
Diode (A/T Shift)
A61(A), A62(B)
Junction
Connector
A61(A)
Junction
Connector
A79(C)
Stop Light
Switch
A82(C), E51(D)
Junction
Connector
A64(B)
Junction
Connector
E60(B)
Park/Neutral
Position Switch
E52(A)
Junction
Connector
LA3
A8
PL
RL
NL
DL
RB
GND

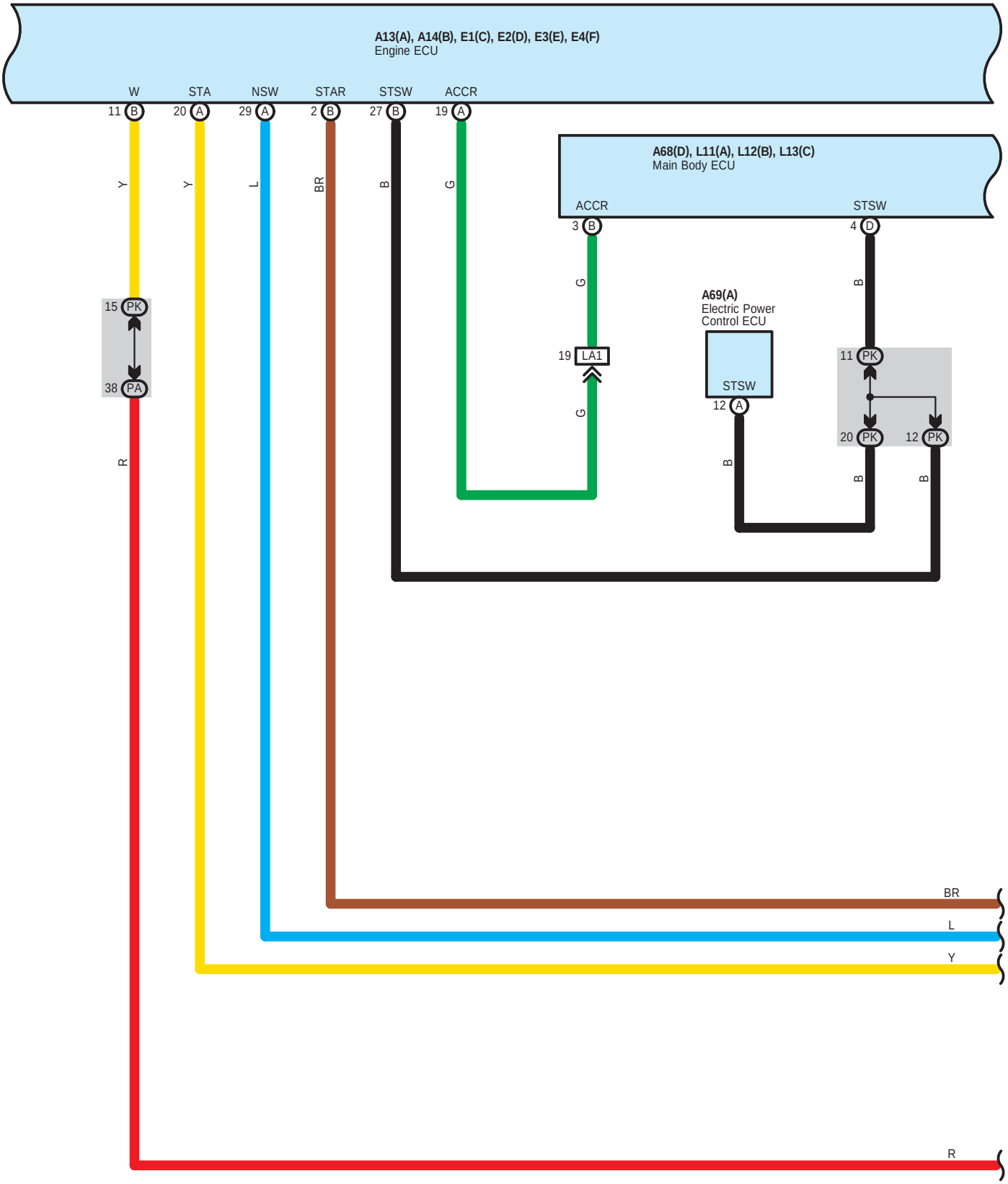
A13(A), A14(B), E1(C), E2(D), E3(E), E4(F)
Engine ECU
W
STA
NSW
STAR
STSW
ACCR
11 B
20 A
29 A
2 B
27 B
19 A
Y
Y
L
BR
B
G
A68(D), L11(A), L12(B), L13(C)
Main Body ECU
ACCR
STSW
3 B
4 D
G
B
A69(A)
Electric Power
Control ECU
15 PK
38 PA
19 LA1
STSW
12 A
11 PK
20 PK
12 PK
G
R
B
B
B
BR
L
Y
R

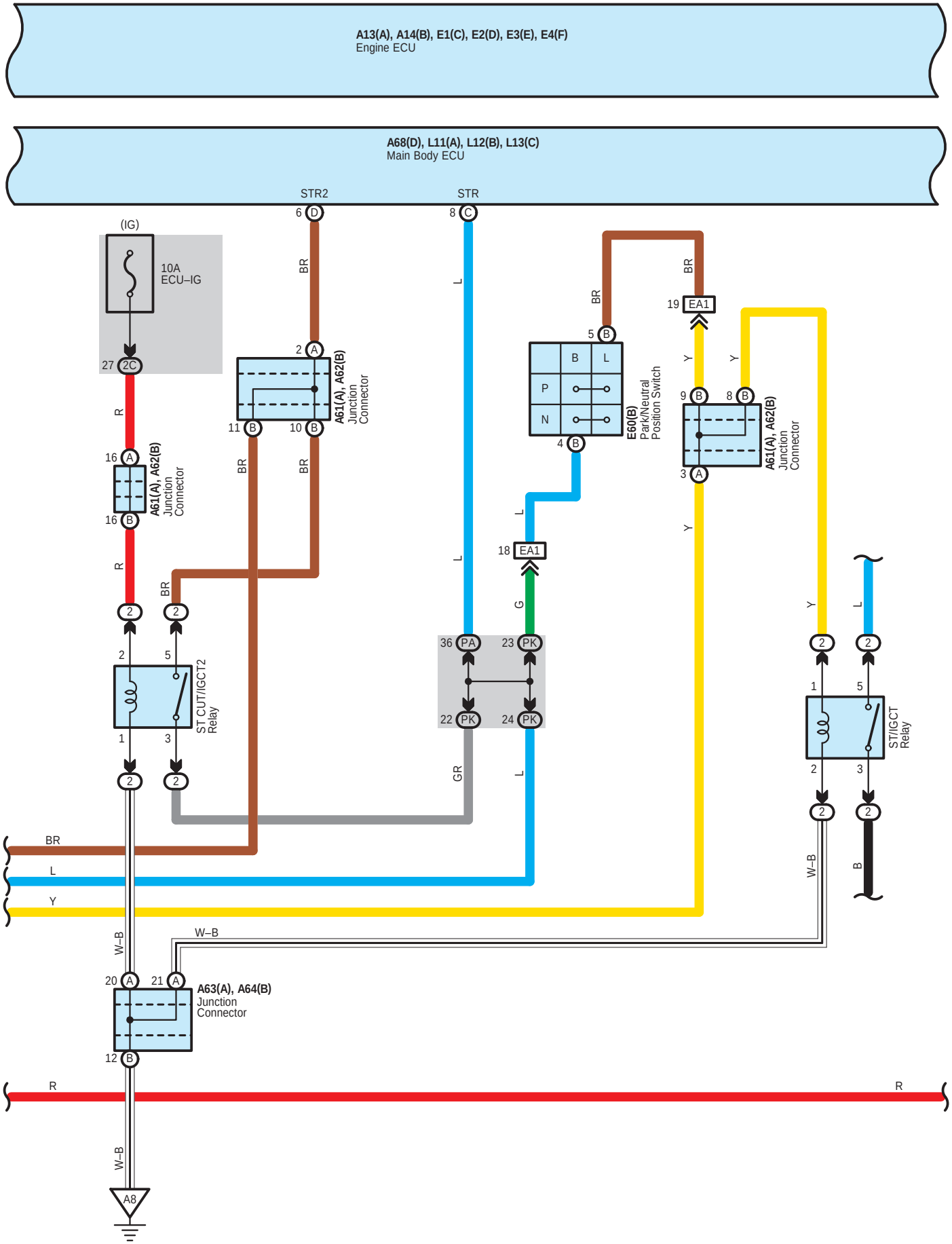
A13(A), A14(B), E1(C), E2(D), E3(E), E4(F)
Engine ECU
A68(D), L11(A), L12(B), L13(C)
Main Body ECU
STR2
STR
(IG)
10A
ECU–IG
A61(A), A62(B)
Junction
Connector
E60(B)
Park/Neutral
Position Switch
ST CUT/IGCT2
Relay
ST/IGCT
Relay
A63(A), A64(B)
Junction
Connector
EA1
A8
BR
L
Y
R
W–B
B
G
GR

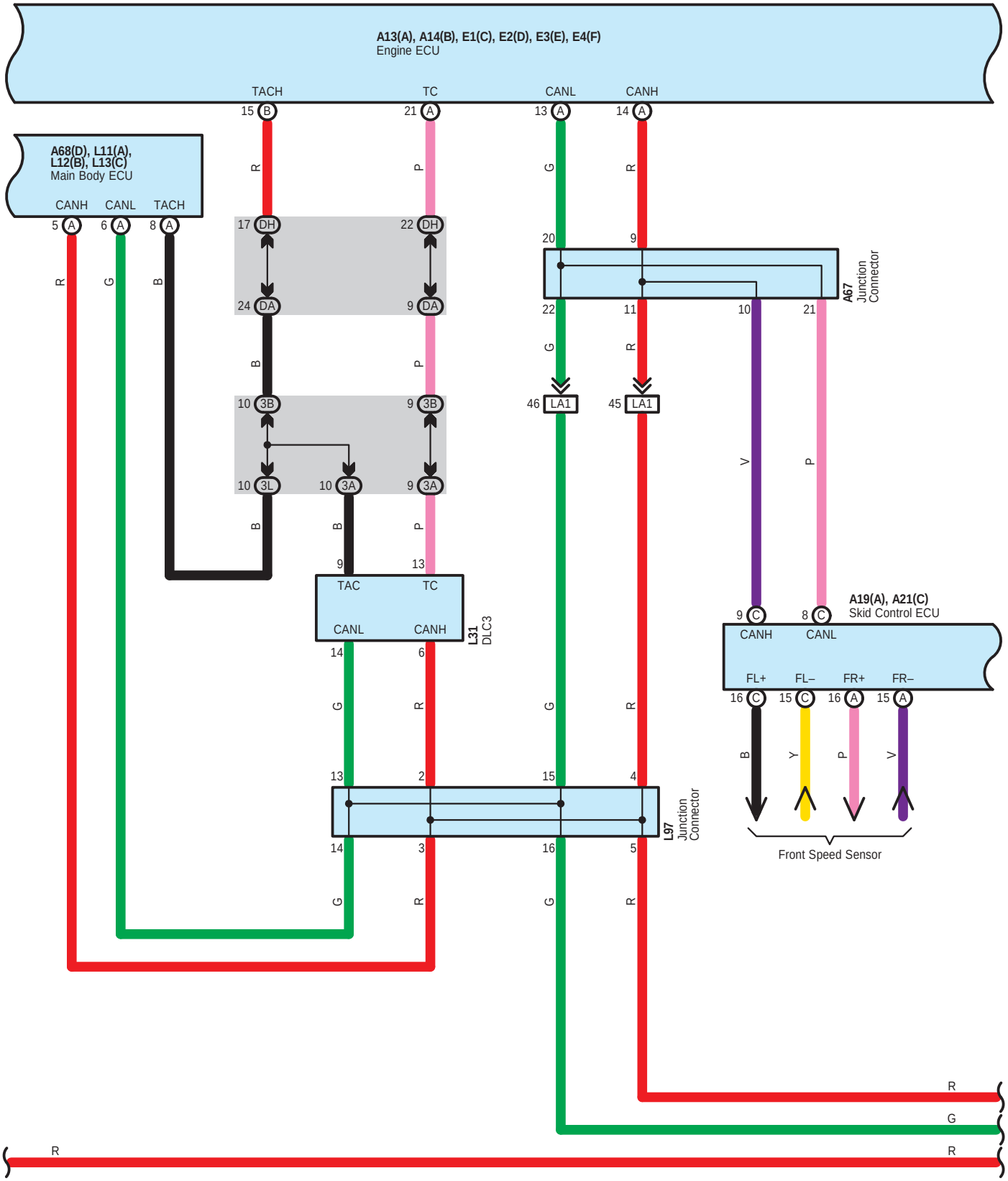
A13(A), A14(B), E1(C), E2(D), E3(E), E4(F)
Engine ECU
TACH
TC
CANL
CANH
A68(D), L11(A), L12(B), L13(C)
Main Body ECU
CANH
CANL
TACH
A67
Junction Connector
LA1
TAC
TC
CANL
CANH
L31
DLC3
A19(A), A21(C)
Skid Control ECU
FL+
FL–
FR+
FR–
L97
Junction Connector
Front Speed Sensor

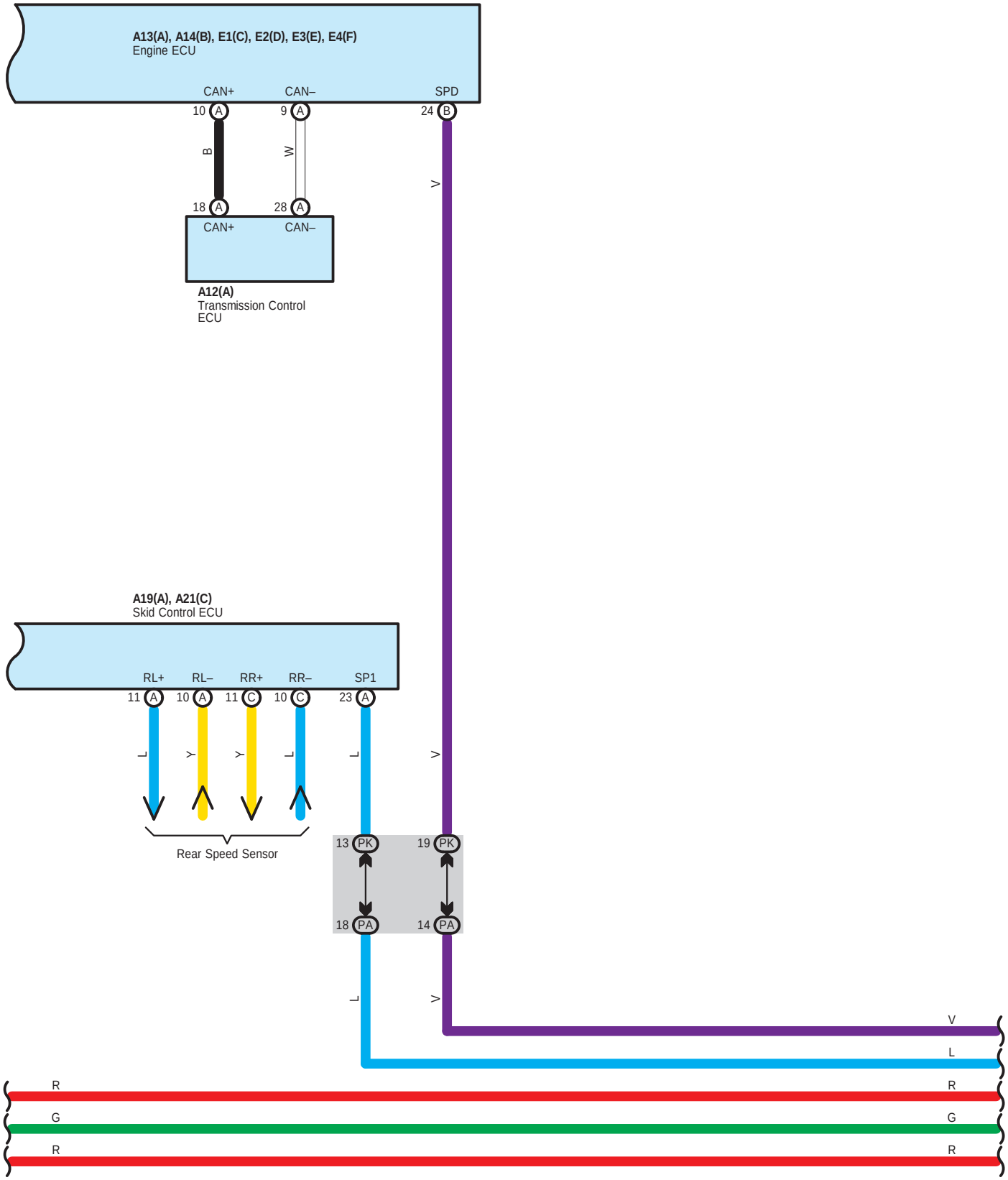
A13(A), A14(B), E1(C), E2(D), E3(E), E4(F)
Engine ECU
CAN+
CAN–
SPD
10 A
9 A
24 B
B
W
V
18 A
28 A
CAN+
CAN–
A12(A)
Transmission Control ECU
A19(A), A21(C)
Skid Control ECU
RL+
RL–
RR+
RR–
SP1
11 A
10 A
11 C
10 C
23 A
L
Y
Y
L
L
V
Rear Speed Sensor
13 PK
19 PK
18 PA
14 PA
L
V
V
L
R
R
G
G
R
R

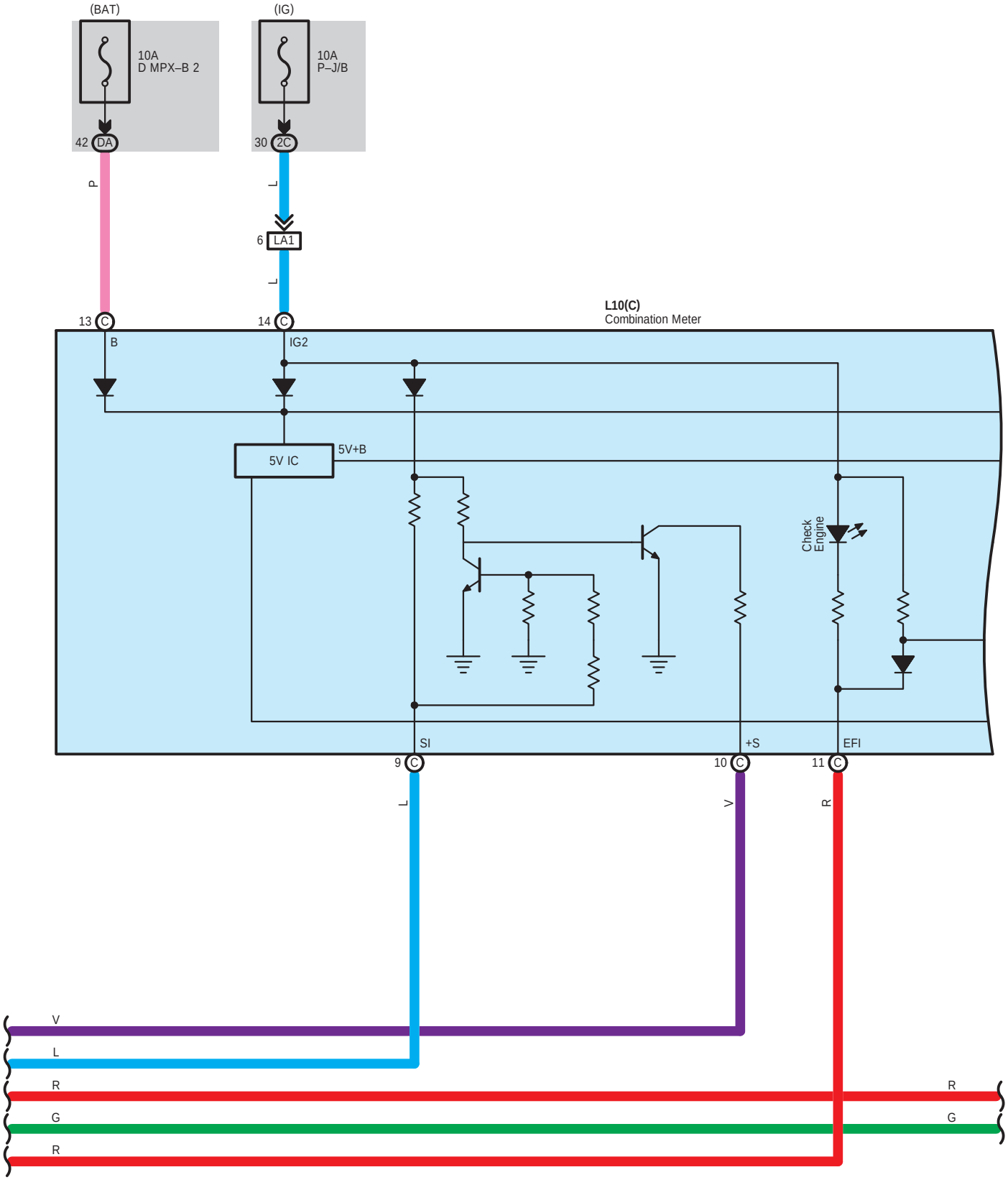
(BAT)
10A
D MPX–B 2
42 DA
(IG)
10A
P–J/B
30 2C
P
L
6 LA1
L
L10(C)
Combination Meter
13 C
14 C
B
IG2
5V IC
5V+B
Check
Engine
SI
+S
EFI
9 C
10 C
11 C
L
V
R
V
L
R
R
G
G
R

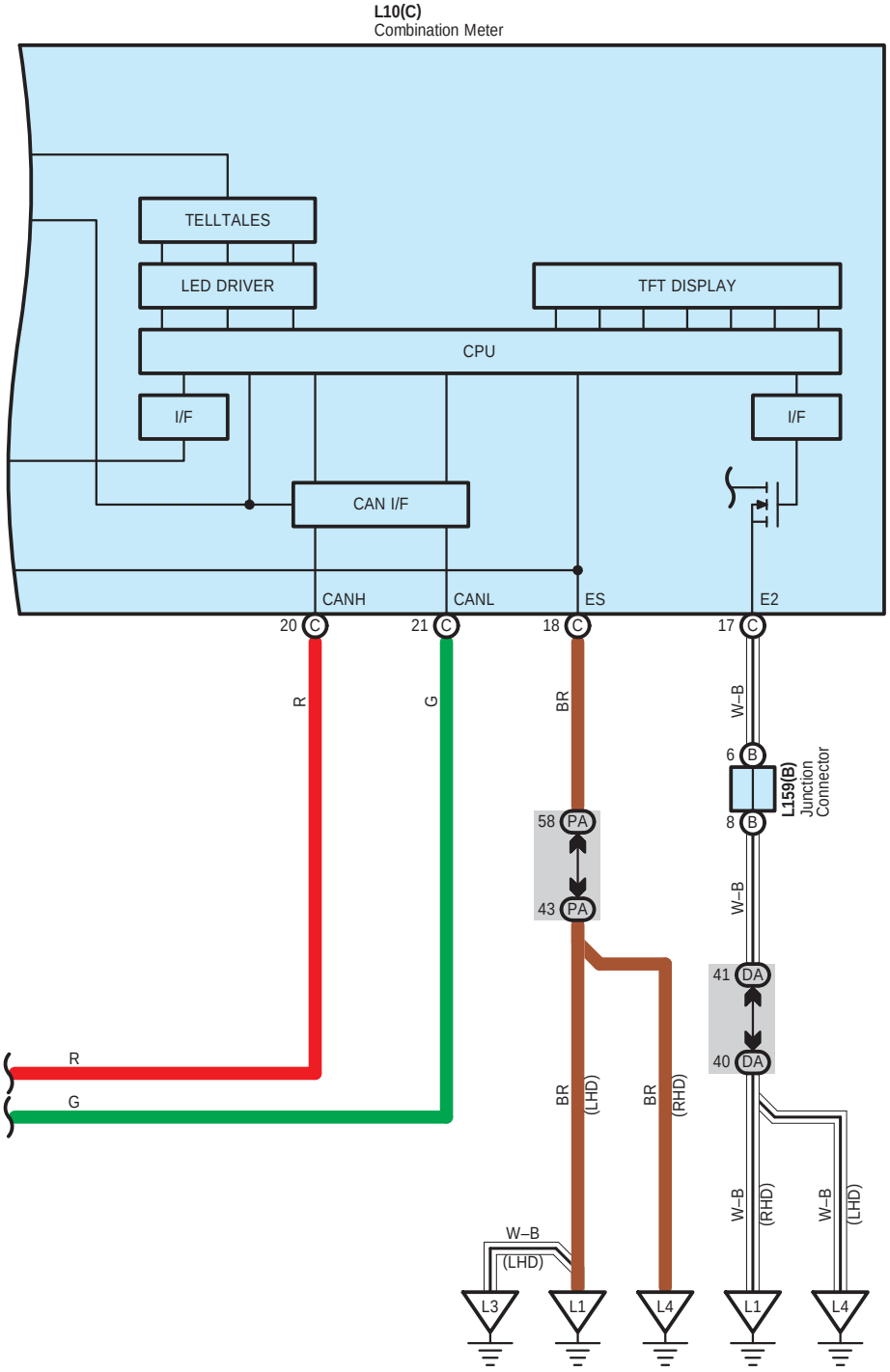
L10(C)
Combination Meter
TELLTALES
LED DRIVER
TFT DISPLAY
CPU
I/F
I/F
CAN I/F
CANH
CANL
ES
E2
20 C
21 C
18 C
17 C
R
G
BR
W–B
6 B
L159(B)
Junction
Connector
8 B
58 PA
43 PA
W–B
41 DA
40 DA
R
G
BR
(LHD)
BR
(RHD)
W–B
(RHD)
W–B
(LHD)
W–B
(LHD)
L3
L1
L4
L1
L4

A 12
Gray

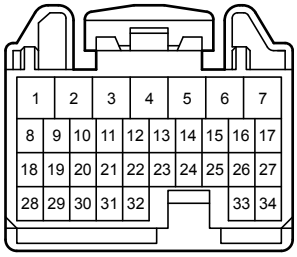

A 13
White

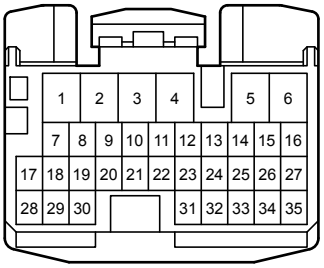

A 14
White

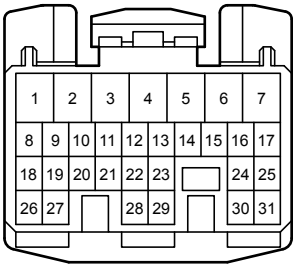

A 16
Black

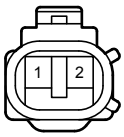

A 19
Black

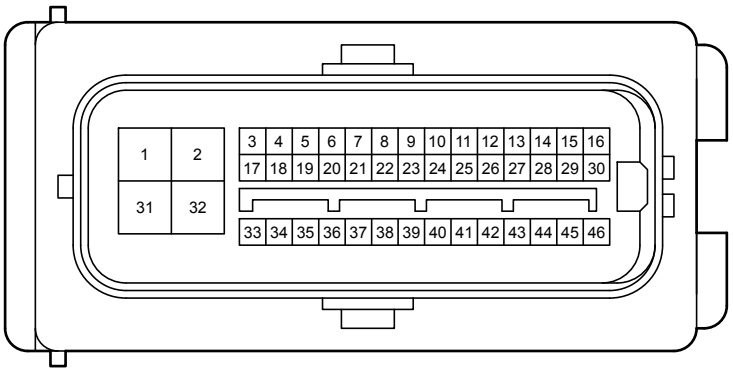

A 21
Gray

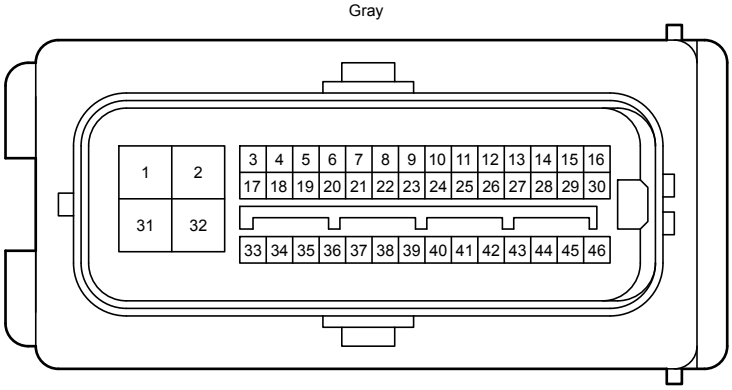

A 36
Black

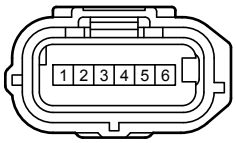

A 61
Black

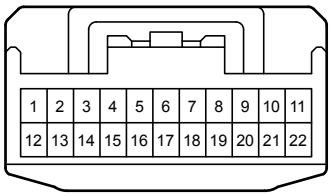

A 62
Blue

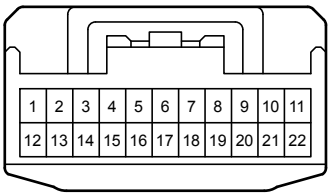

A 63
Black

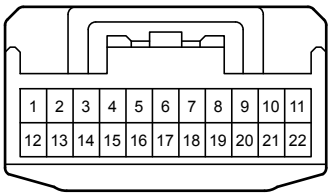

A 64
Black

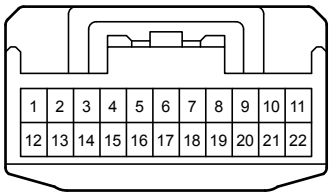

A 67
Black

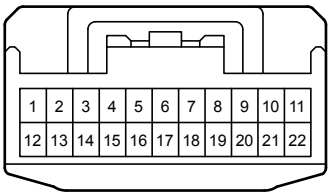

A 68
White

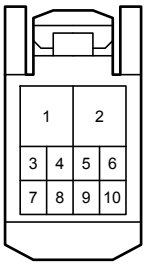

A 69
White

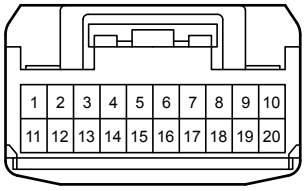

A 79
White

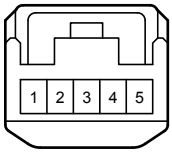

A 82
Gray

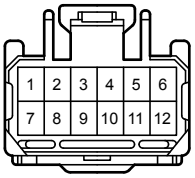

E 1
White

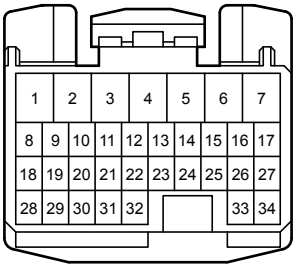

E 2
White

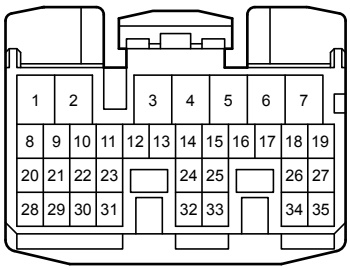

E 3
White

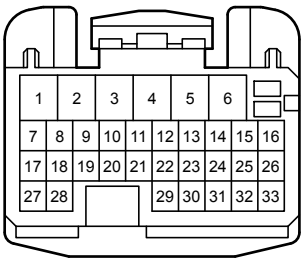

E 4
White

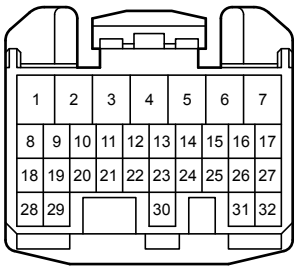

E 9
Black

E 10
Black

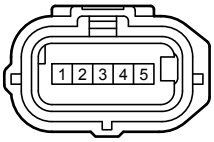

E 12
Black

E 13
Black

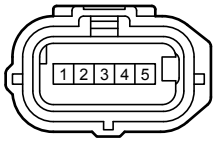

E 14
Dark Gray

E 17
Black

E 18
Black

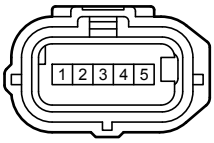

E 19
Black

E 20
Black

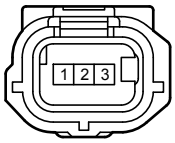

E 21
Black

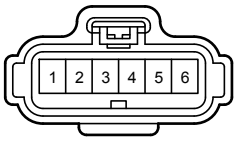

E 22
Black

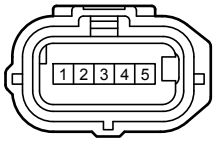

E 24
Black

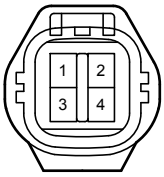

E 30
Gray

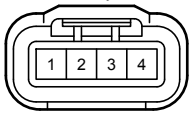

E 31
Black

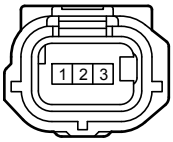

E 32
Black

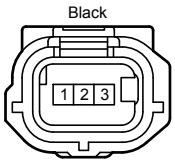

E 33
Black

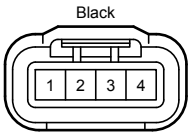

E 34
Gray

E 36
Black

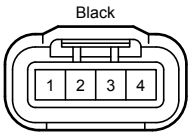

E 38
Gray

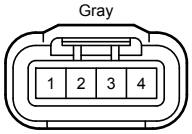

E 39
Black

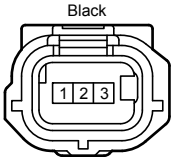

E 40
Black

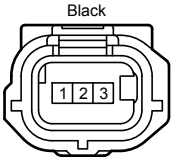

E 41
Black

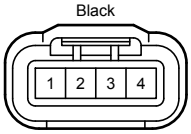

E 42
Gray

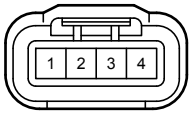

E 44
Black

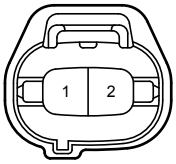

E 45
Black

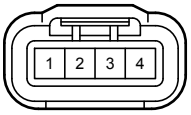

E 46
Black

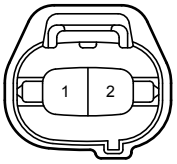

E 51
Blue

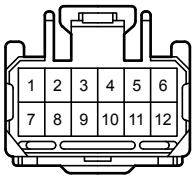

E 52
Black

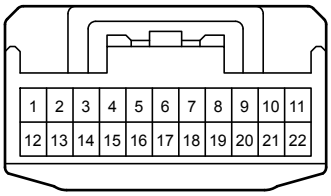

E 53
Black

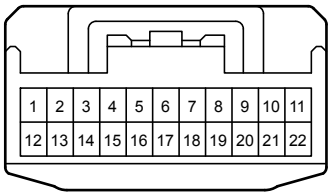

E 54
Black

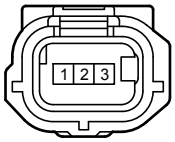

E 55
Black

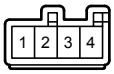

E 56
Dark Gray

E 57
Dark Gray

E 60
Black

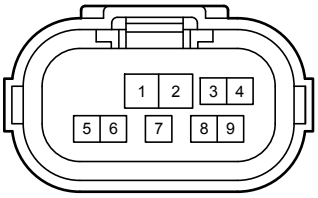

H 7
Black

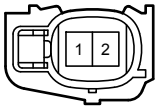

H 10
Black

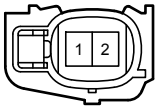

H 12
Gray

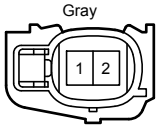

H 14
Gray

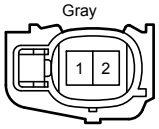

I 5
Black

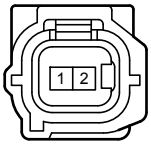

I 6
Black

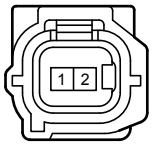

I 7
Black

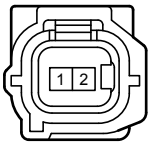

I 8
Black

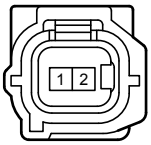

J 5
Black

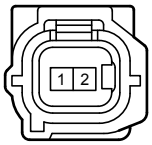

J 6
Black

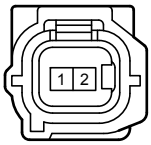

J 7
Black

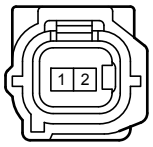

J 8
Black

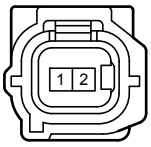

L 10
White

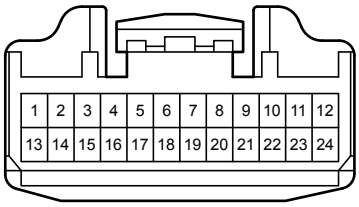

(Before Sep. 2008 Production)

L 10
Black

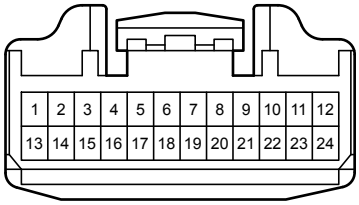

(From Sep. 2008 Production)

L 11
White

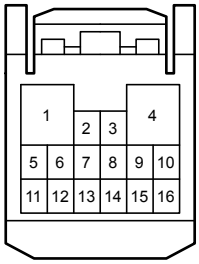

L 12
White

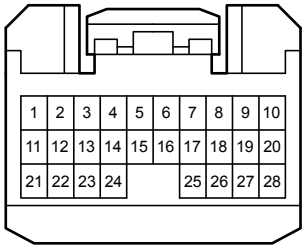

L 13
White

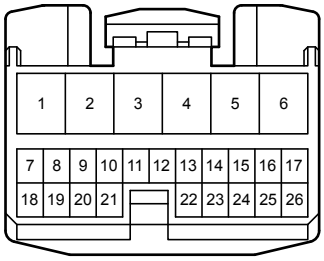

L 31
White

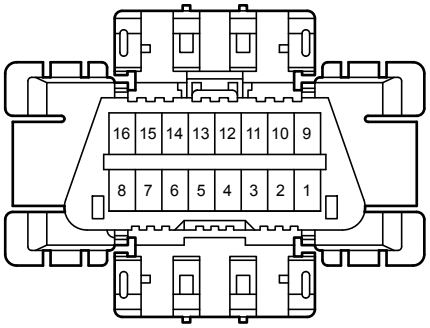

L 32
White

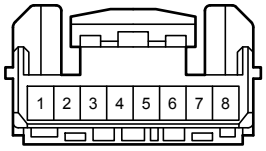

L 49
Dark Gray

L 50
Dark Gray

L 97
Black

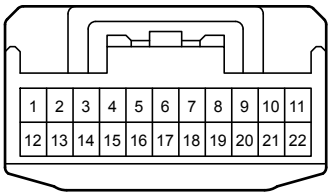

L157
White

L159
Blue

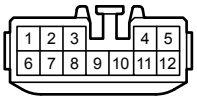

L164
Blue

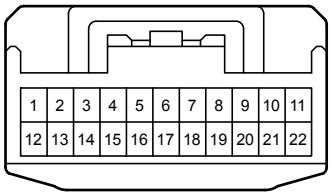

S 11
White

S 57
White

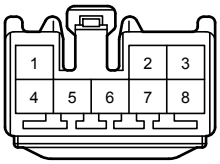

z 22
Black

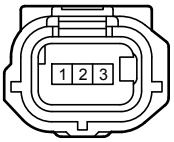

1L

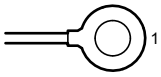

2B
Black

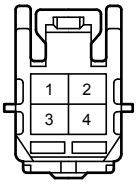

2C
White

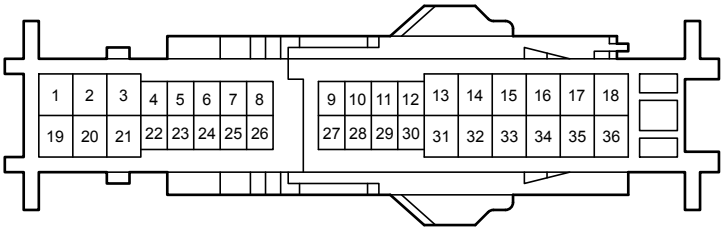

2D
Black

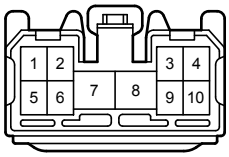

2E
Black

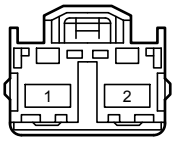

2G
Black

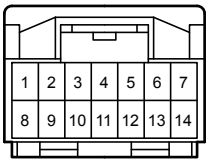

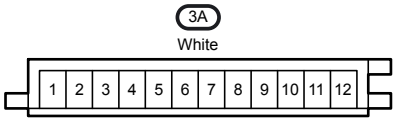
3A
White
1 2 3 4 5 6 7 8 9 10 11 12

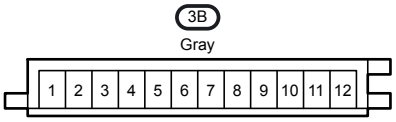
3B
Gray
1 2 3 4 5 6 7 8 9 10 11 12

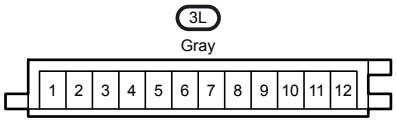
3L
Gray
1 2 3 4 5 6 7 8 9 10 11 12

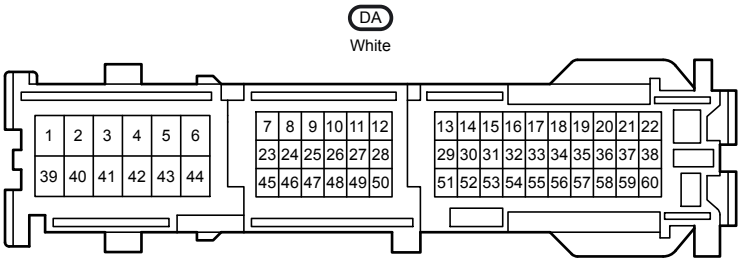
DA
White
1 2 3 4 5 6
39 40 41 42 43 44
7 8 9 10 11 12
23 24 25 26 27 28
45 46 47 48 49 50
13 14 15 16 17 18 19 20 21 22
29 30 31 32 33 34 35 36 37 38
51 52 53 54 55 56 57 58 59 60

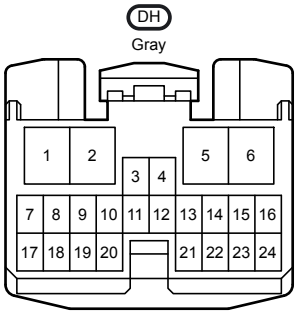
DH
Gray
1 2 3 4 5 6
7 8 9 10 11 12 13 14 15 16
17 18 19 20 21 22 23 24

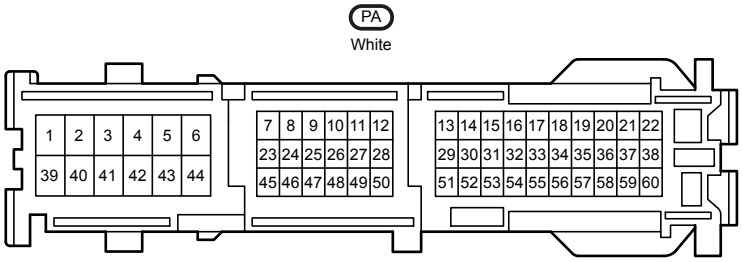
PA
White
1 2 3 4 5 6
39 40 41 42 43 44
7 8 9 10 11 12
23 24 25 26 27 28
45 46 47 48 49 50
13 14 15 16 17 18 19 20 21 22
29 30 31 32 33 34 35 36 37 38
51 52 53 54 55 56 57 58 59 60

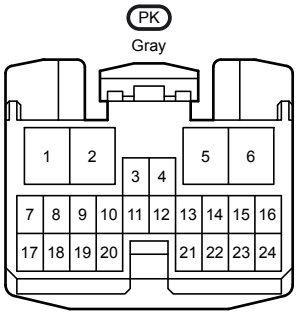
PK
Gray
1 2 3 4 5 6
7 8 9 10 11 12 13 14 15 16
17 18 19 20 21 22 23 24

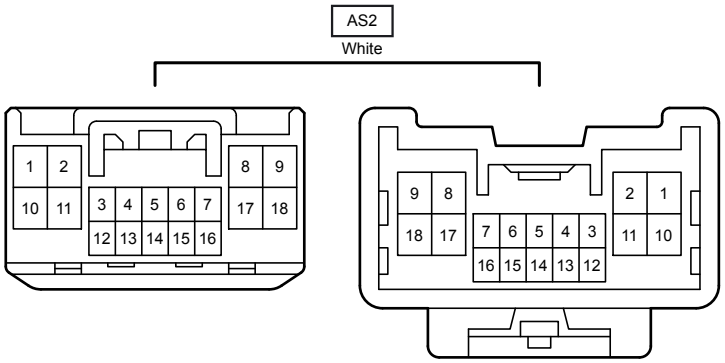
AS2
White
1 2
10 11
3 4 5 6 7
12 13 14 15 16
8 9
17 18
9 8
18 17
7 6 5 4 3
16 15 14 13 12
2 1
11 10

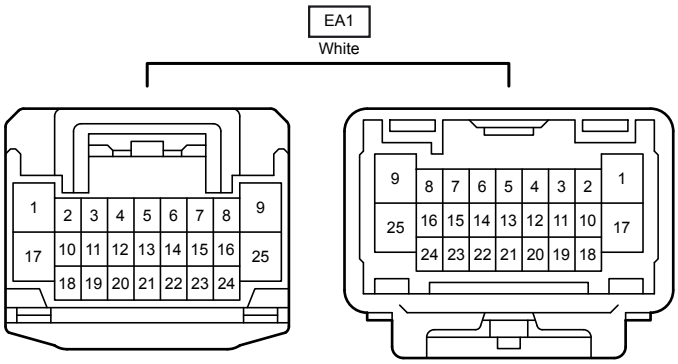
EA1
White
1 2 3 4 5 6 7 8 9
17 10 11 12 13 14 15 16 25
18 19 20 21 22 23 24
9 8 7 6 5 4 3 2 1
25 16 15 14 13 12 11 10 17
24 23 22 21 20 19 18

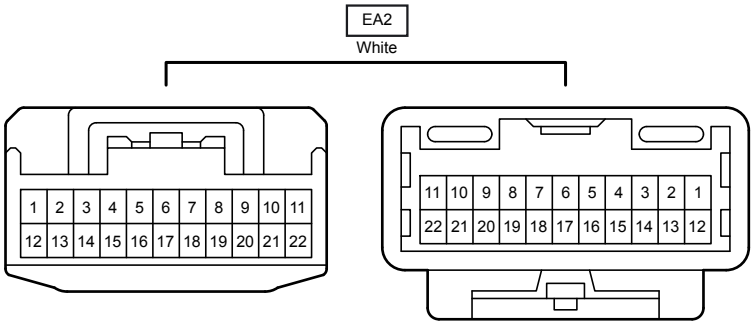
EA2
White
1 2 3 4 5 6 7 8 9 10 11
12 13 14 15 16 17 18 19 20 21 22
11 10 9 8 7 6 5 4 3 2 1
22 21 20 19 18 17 16 15 14 13 12

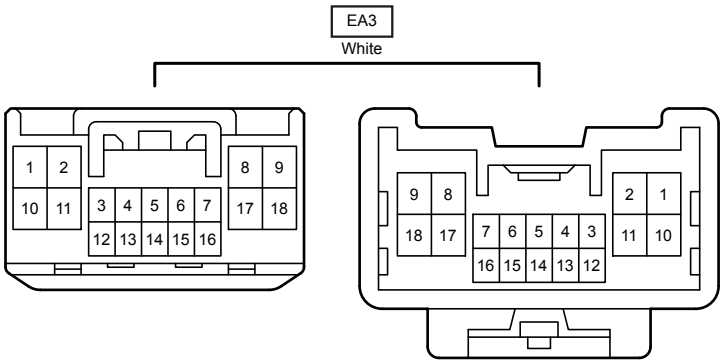
EA3
White
1 2
10 11
3 4 5 6 7
12 13 14 15 16
8 9
17 18
9 8
18 17
7 6 5 4 3
16 15 14 13 12
2 1
11 10

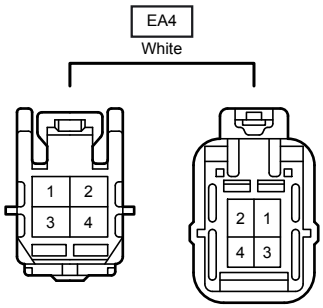
EA4
White
1 2
3 4
2 1
4 3

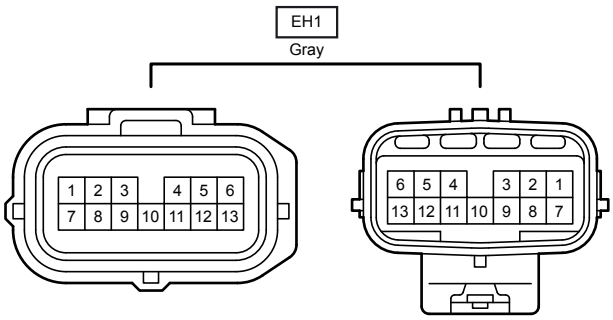
EH1
Gray
1 2 3 4 5 6
7 8 9 10 11 12 13
6 5 4 3 2 1
13 12 11 10 9 8 7

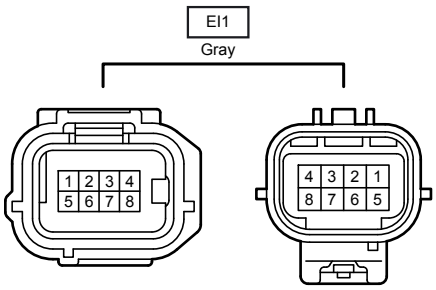
EI1
Gray
1 2 3 4
5 6 7 8
4 3 2 1
8 7 6 5

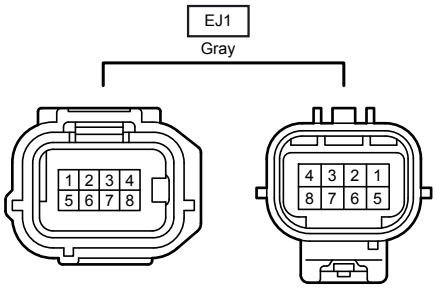
EJ1
Gray
1 2 3 4
5 6 7 8
4 3 2 1
8 7 6 5

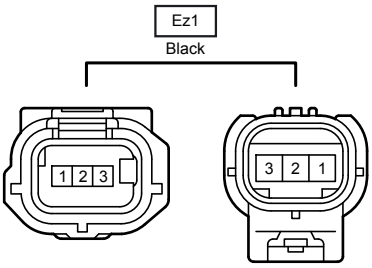
Ez1
Black
1 2 3
3 2 1

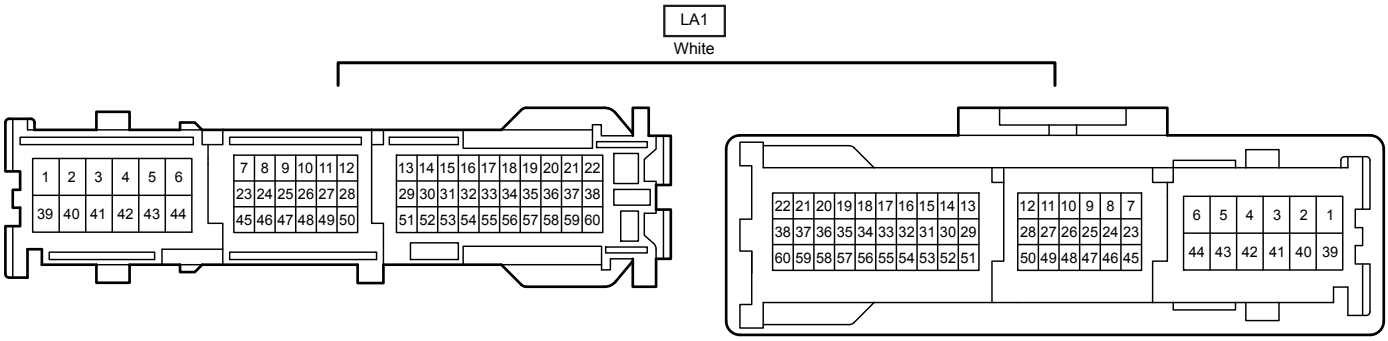
LA1
White
1 2 3 4 5 6
39 40 41 42 43 44
7 8 9 10 11 12
23 24 25 26 27 28
45 46 47 48 49 50
13 14 15 16 17 18 19 20 21 22
29 30 31 32 33 34 35 36 37 38
51 52 53 54 55 56 57 58 59 60
22 21 20 19 18 17 16 15 14 13
38 37 36 35 34 33 32 31 30 29
60 59 58 57 56 55 54 53 52 51
12 11 10 9 8 7
28 27 26 25 24 23
50 49 48 47 46 45
6 5 4 3 2 1
44 43 42 41 40 39

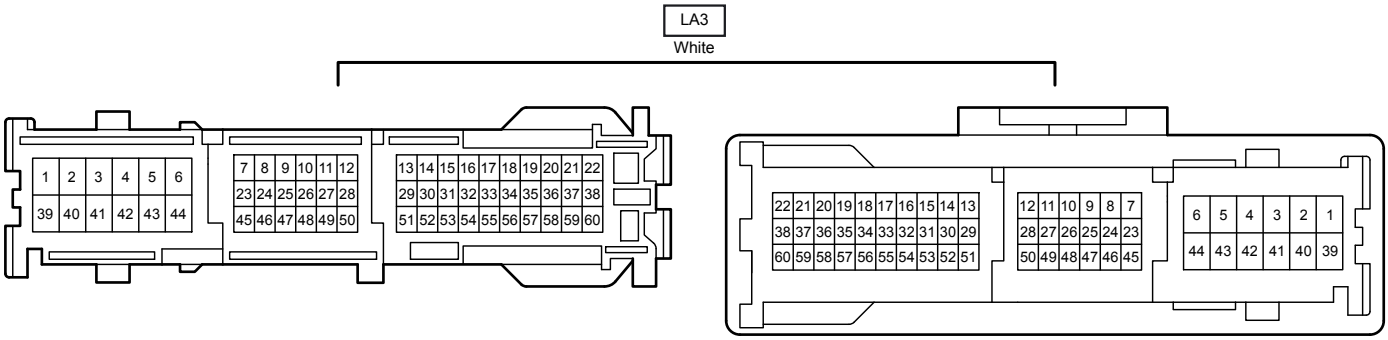
LA3
White
1 2 3 4 5 6
39 40 41 42 43 44
7 8 9 10 11 12
23 24 25 26 27 28
45 46 47 48 49 50
13 14 15 16 17 18 19 20 21 22
29 30 31 32 33 34 35 36 37 38
51 52 53 54 55 56 57 58 59 60
22 21 20 19 18 17 16 15 14 13
38 37 36 35 34 33 32 31 30 29
60 59 58 57 56 55 54 53 52 51
12 11 10 9 8 7
28 27 26 25 24 23
50 49 48 47 46 45
6 5 4 3 2 1
44 43 42 41 40 39