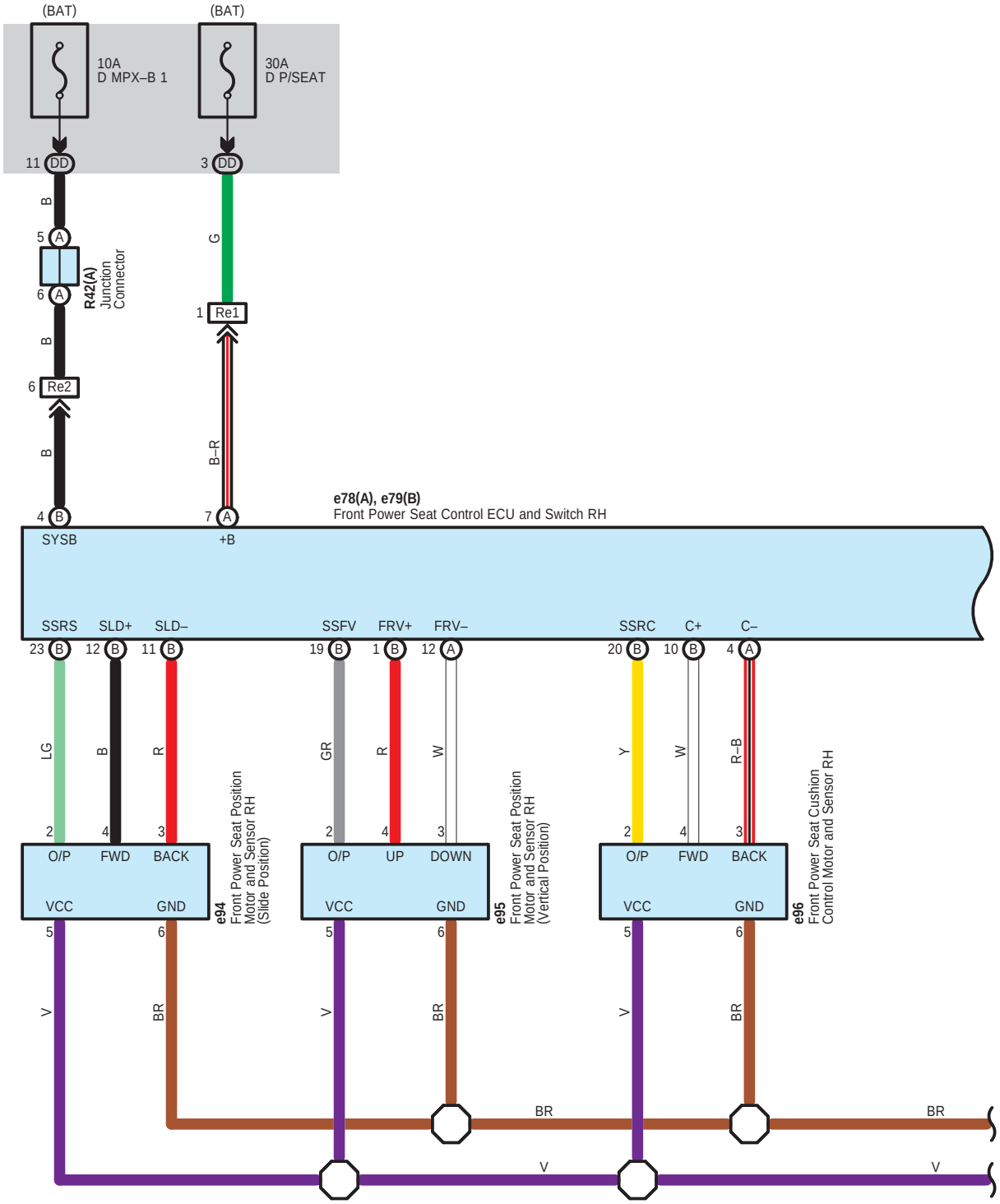
(BAT)
(BAT)
10A
D MPX–B 1
30A
D P/SEAT
11 DD
3 DD
B
G
5 A
6 A
R42(A)
Junction
Connector
1 Re1
B
6 Re2
B
B–R
4 B
7 A
SYSB
+B
e78(A), e79(B)
Front Power Seat Control ECU and Switch RH
SSRS
SLD+
SLD–
SSFV
FRV+
FRV–
SSRC
C+
C–
23 B
12 B
11 B
19 B
1 B
12 A
20 B
10 B
4 A
LG
B
R
GR
R
W
Y
W
R–B
2
4
3
2
4
3
2
4
3
O/P
FWD
BACK
O/P
UP
DOWN
O/P
FWD
BACK
VCC
GND
VCC
GND
VCC
GND
e94
Front Power Seat Position
Motor and Sensor RH
(Slide Position)
e95
Front Power Seat Position
Motor and Sensor RH
(Vertical Position)
e96
Front Power Seat Cushion
Control Motor and Sensor RH
5
6
5
6
5
6
V
BR
V
BR
V
BR
BR
BR
V
V

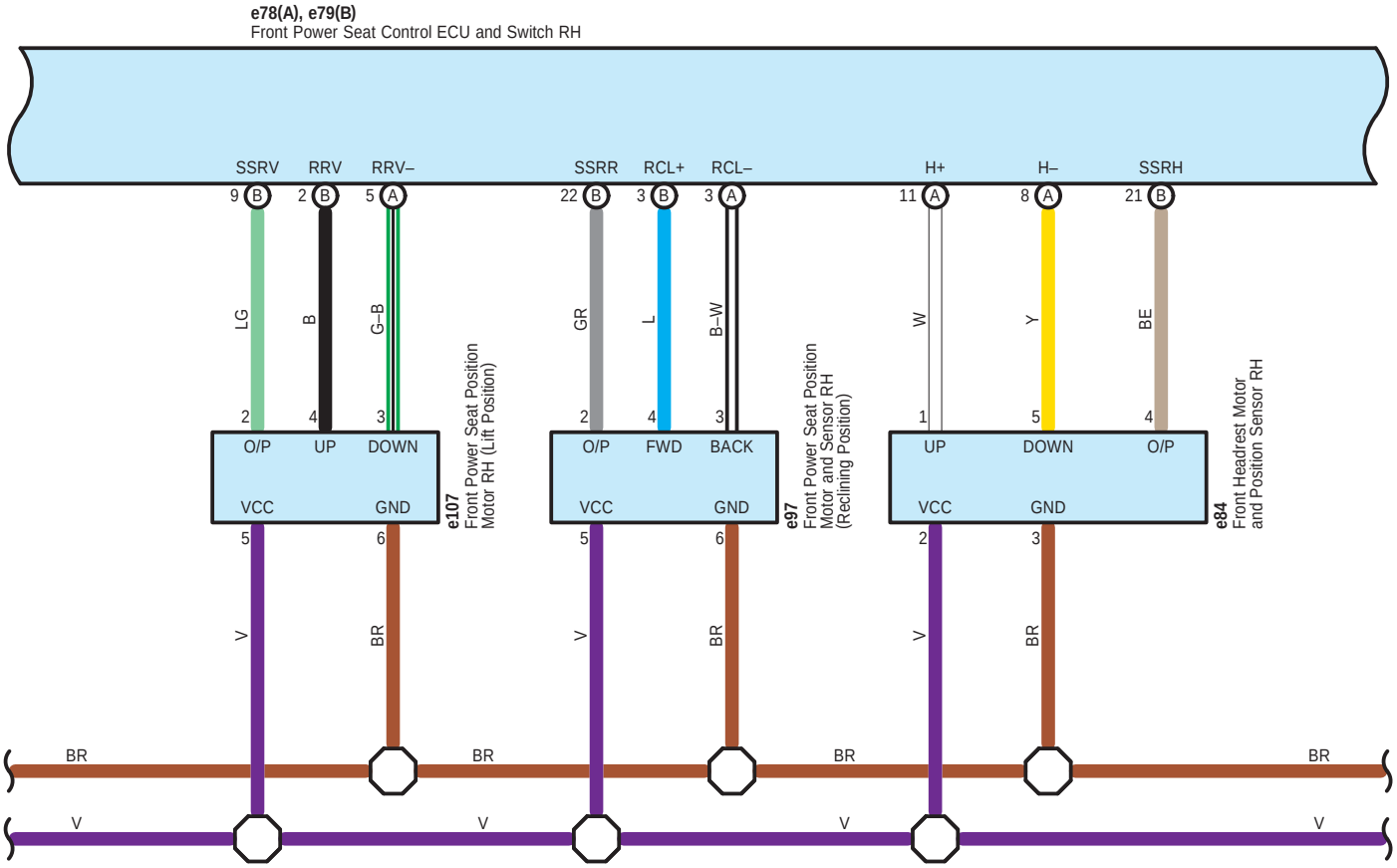
e78(A), e79(B)
Front Power Seat Control ECU and Switch RH
SSRV
RRV
RRV–
SSRR
RCL+
RCL–
H+
H–
SSRH
9 B
2 B
5 A
22 B
3 B
3 A
11 A
8 A
21 B
LG
B
G–B
GR
L
B–W
W
Y
BE
2
4
3
2
4
3
1
5
4
O/P
UP
DOWN
O/P
FWD
BACK
UP
DOWN
O/P
VCC
GND
VCC
GND
VCC
GND
e107
Front Power Seat Position
Motor RH (Lift Position)
e97
Front Power Seat Position
Motor and Sensor RH
(Reclining Position)
e84
Front Headrest Motor
and Position Sensor RH
5
6
5
6
2
3
V
BR
V
BR
V
BR
BR
BR
BR
BR
V
V
V
V

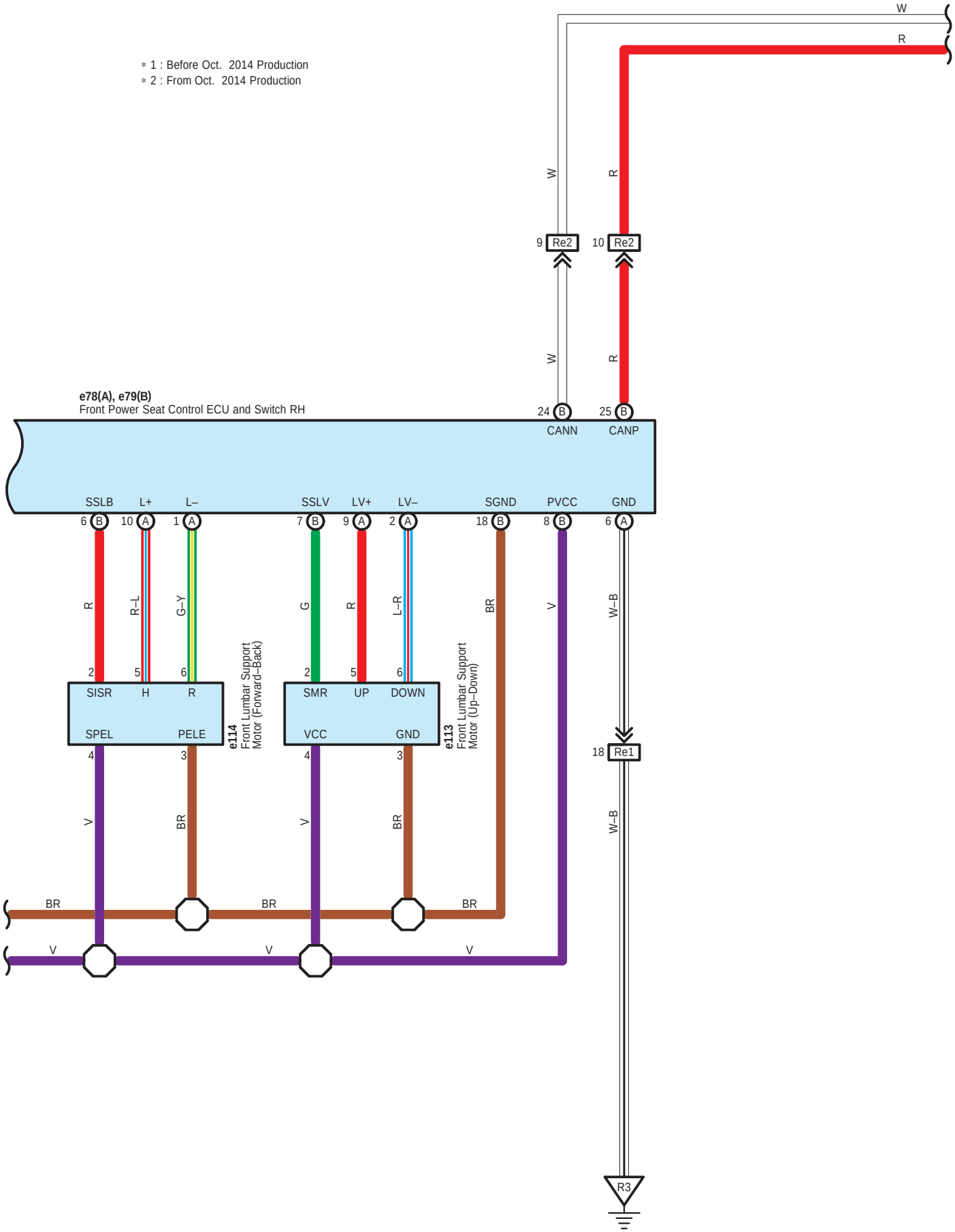
∗ 1 : Before Oct. 2014 Production
∗ 2 : From Oct. 2014 Production
W
R
9 Re2
10 Re2
e78(A), e79(B)
Front Power Seat Control ECU and Switch RH
24 B CANN
25 B CANP
SSLB
L+
L–
SSLV
LV+
LV–
SGND
PVCC
GND
6 B
10 A
1 A
7 B
9 A
2 A
18 B
8 B
6 A
R
R–L
G–Y
G
L–R
BR
V
W–B
SISR
H
R
SPEL
PELE
e114
Front Lumbar Support
Motor (Forward–Back)
SMR
UP
DOWN
VCC
GND
e113
Front Lumbar Support
Motor (Up–Down)
18 Re1
R3

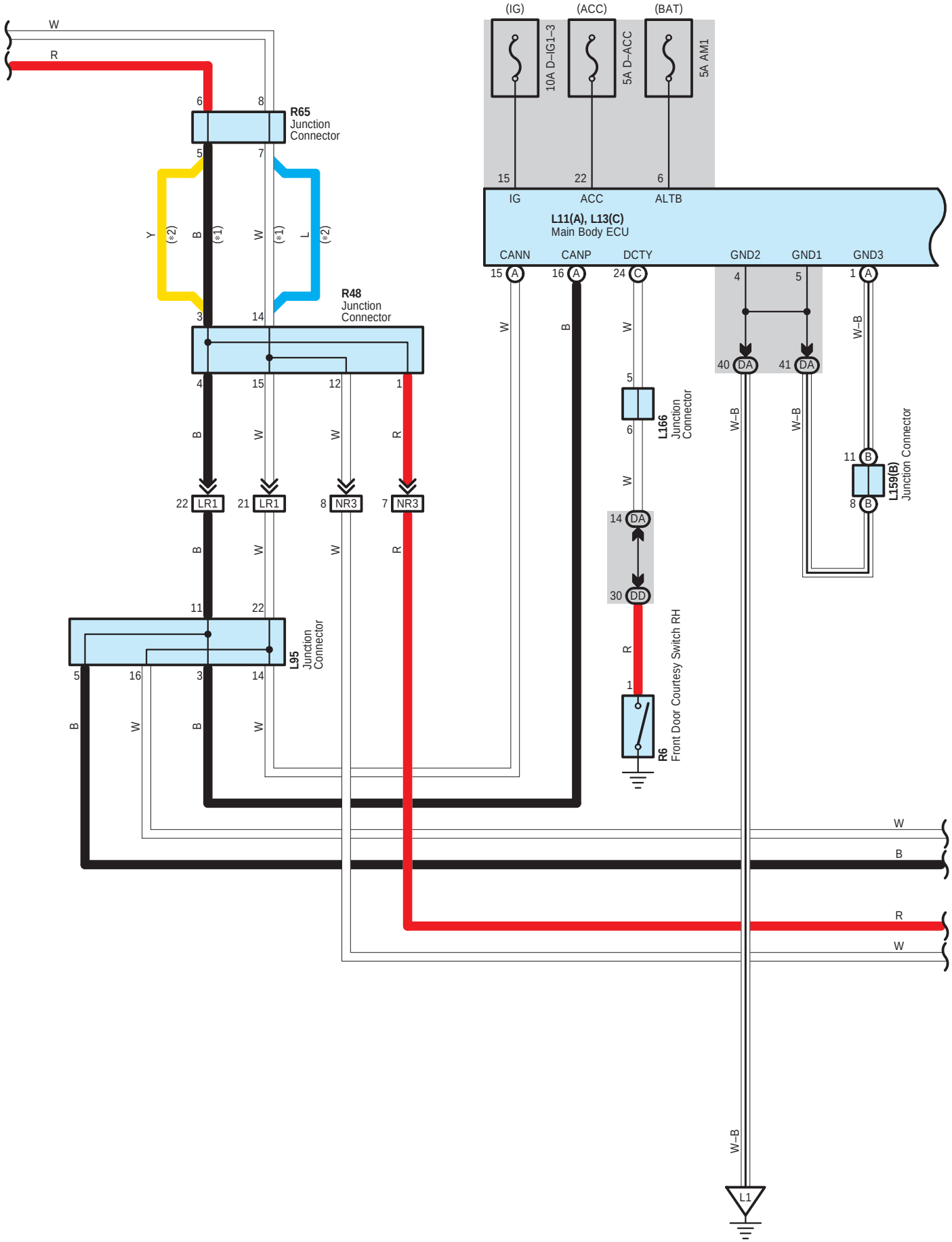
(IG)
(ACC)
(BAT)
10A D–IG1–3
5A D–ACC
5A AM1
15
22
6
IG
ACC
ALTB
L11(A), L13(C)
Main Body ECU
CANN
CANP
DCTY
GND2
GND1
GND3
15 A
16 A
24 C
4
5
1 A
40 DA
41 DA
W
R
6
8
R65
Junction
Connector
5
7
Y
(*2)
B
(*1)
W
(*1)
L
(*2)
R48
Junction
Connector
3
14
4
15
12
1
B
W
W
R
22 LR1
21 LR1
8 NR3
7 NR3
11
22
L95
Junction
Connector
5
16
3
14
W–B
L166
Junction
Connector
14 DA
30 DD
R6
Front Door Courtesy Switch RH
11 B
8 B
L159(B)
Junction Connector
L1

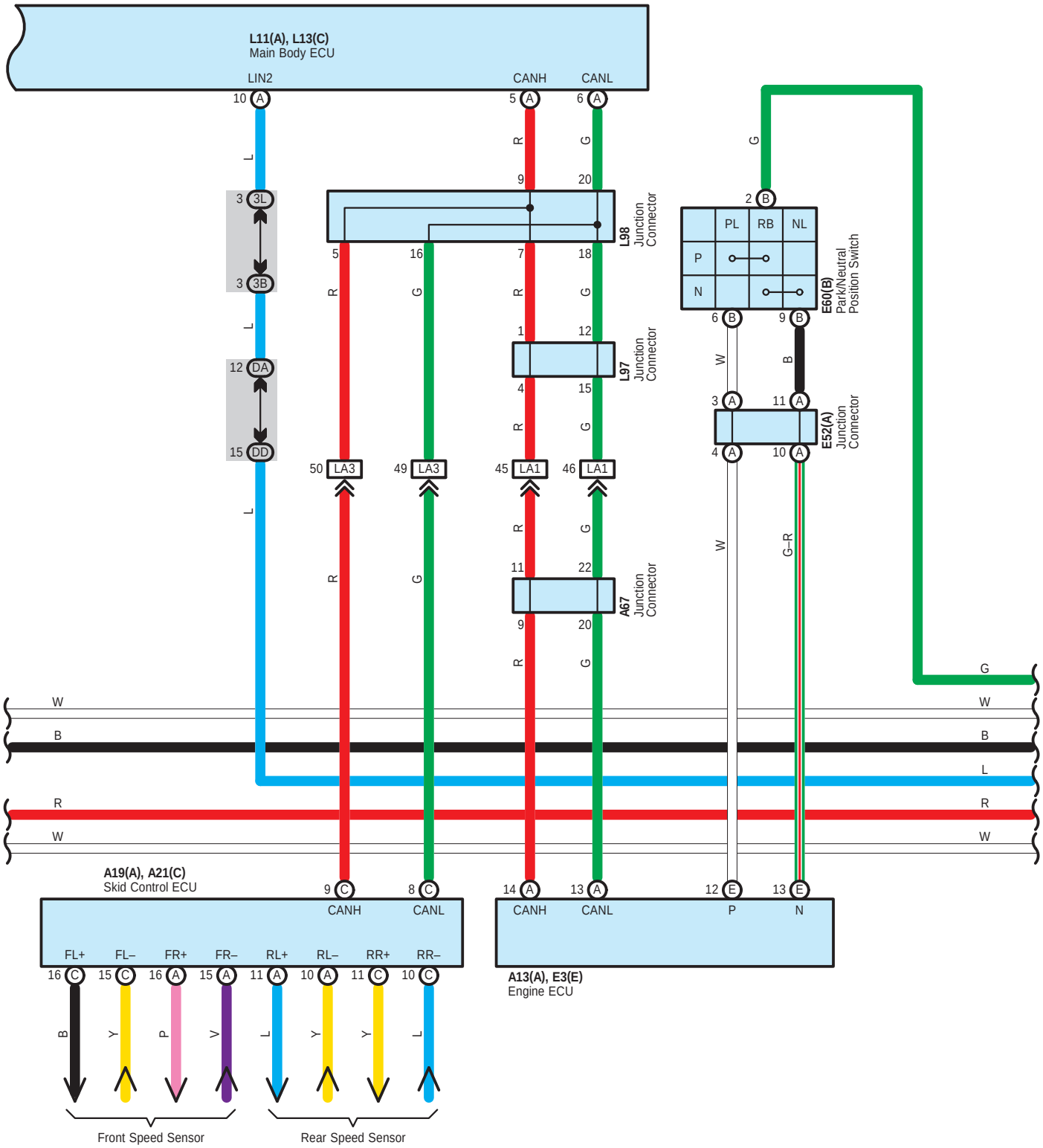
L11(A), L13(C)
Main Body ECU
LIN2
CANH
CANL
10 A
5 A
6 A
3 3L
3 3B
12 DA
15 DD
L98 Junction Connector
L97 Junction Connector
A67 Junction Connector
E60(B) Park/Neutral Position Switch
PL
RB
NL
P
N
E52(A) Junction Connector
50 LA3
49 LA3
45 LA1
46 LA1
A19(A), A21(C)
Skid Control ECU
9 C
8 C
CANH
CANL
FL+
FL–
FR+
FR–
RL+
RL–
RR+
RR–
16 C
15 C
16 A
15 A
11 A
10 A
11 C
10 C
14 A
13 A
12 E
13 E
P
N
A13(A), E3(E)
Engine ECU
Front Speed Sensor
Rear Speed Sensor

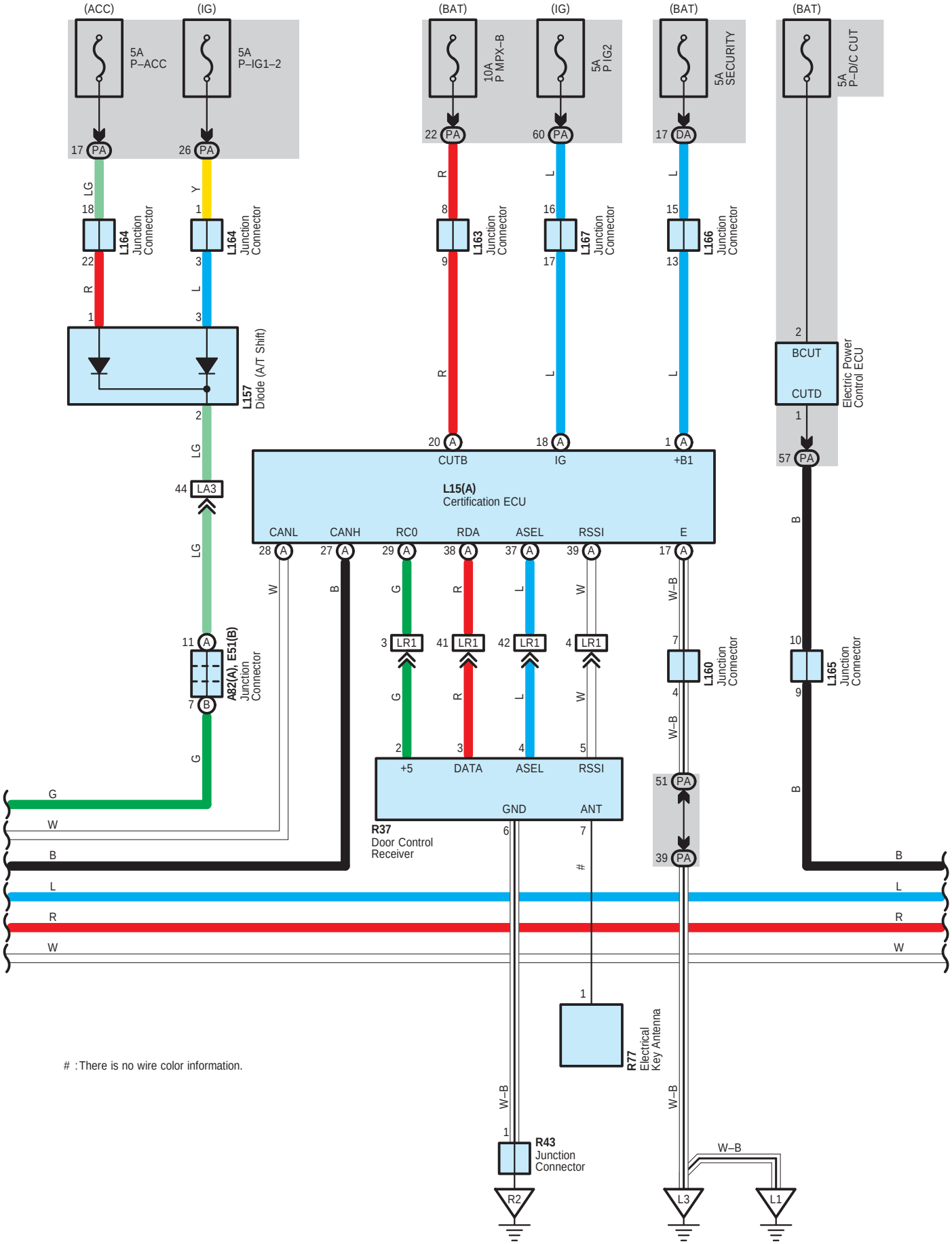
(ACC)
(IG)
(BAT)
(IG)
(BAT)
(BAT)
5A P–ACC
5A P–IG1–2
10A P MPX–B
5A P IG2
5A SECURITY
5A P–D/C CUT
17 PA
26 PA
22 PA
60 PA
17 DA
LG
Y
R
L
L164 Junction Connector
L163 Junction Connector
L167 Junction Connector
L166 Junction Connector
L157 Diode (A/T Shift)
BCUT
CUTD
Electric Power Control ECU
57 PA
20 A
18 A
1 A
CUTB
IG
+B1
44 LA3
L15(A)
Certification ECU
CANL
CANH
RC0
RDA
ASEL
RSSI
E
28 A
27 A
29 A
38 A
37 A
39 A
17 A
W
B
G
W–B
3 LR1
41 LR1
42 LR1
4 LR1
11 A
7 B
A82(A), E51(B) Junction Connector
L160 Junction Connector
L165 Junction Connector
+5
DATA
ASEL
RSSI
GND
ANT
R37
Door Control Receiver
51 PA
39 PA
#
R77
Electrical Key Antenna
R43
Junction Connector
R2
L3
L1
: There is no wire color information.

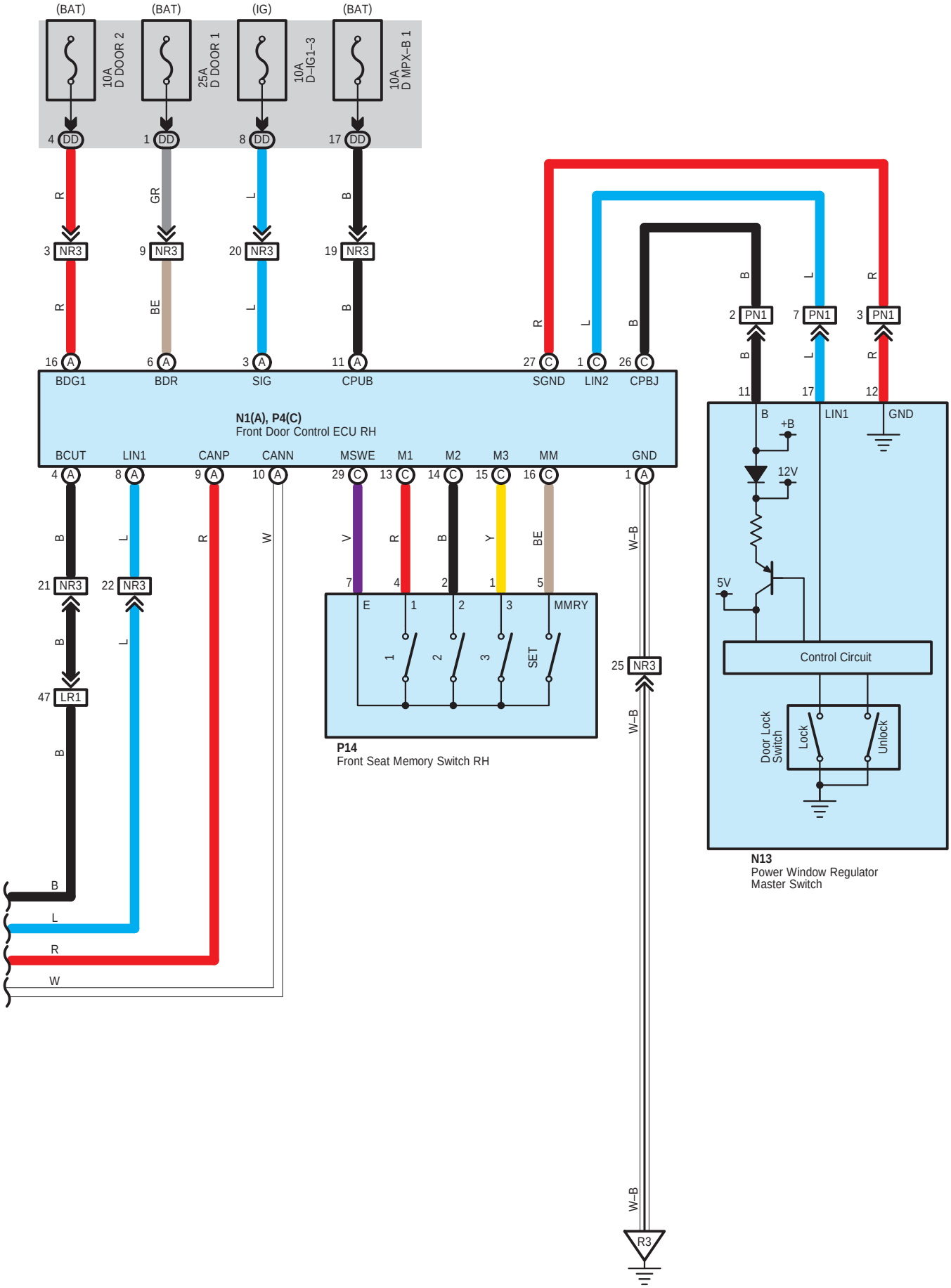
(BAT)
(BAT)
(IG)
(BAT)
10A D DOOR 2
25A D DOOR 1
10A D–IG1–3
10A D MPX–B 1
4 DD
1 DD
8 DD
17 DD
R
GR
L
B
3 NR3
9 NR3
20 NR3
19 NR3
R
BE
L
B
16 A
6 A
3 A
11 A
27 C
1 C
26 C
BDG1
BDR
SIG
CPUB
SGND
LIN2
CPBJ
N1(A), P4(C)
Front Door Control ECU RH
BCUT
LIN1
CANP
CANN
MSWE
M1
M2
M3
MM
GND
4 A
8 A
9 A
10 A
29 C
13 C
14 C
15 C
16 C
1 A
B
L
R
W
V
R
B
Y
BE
W–B
21 NR3
22 NR3
7
4
2
1
5
B
L
47 LR1
B
E
1
2
3
MMRY
1
2
3
SET
25 NR3
W–B
P14
Front Seat Memory Switch RH
B
L
R
W
W–B
R3
2 PN1
7 PN1
3 PN1
B
L
R
B
L
R
11
17
12
B
LIN1
GND
+B
12V
5V
Control Circuit
Door Lock Switch
Lock
Unlock
N13
Power Window Regulator
Master Switch

A 13
White

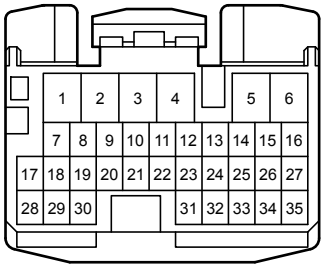

A 19
Black

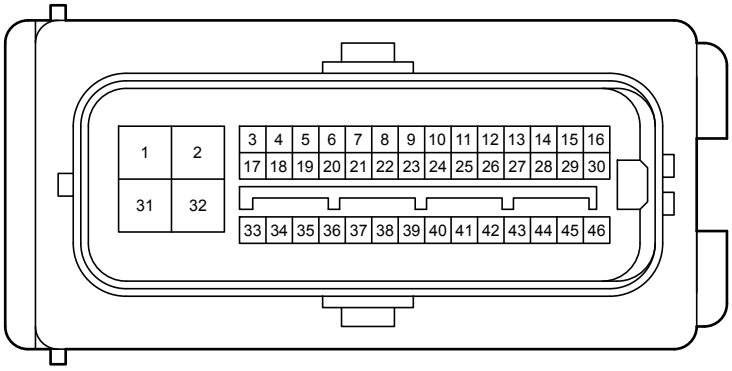

A 21
Gray

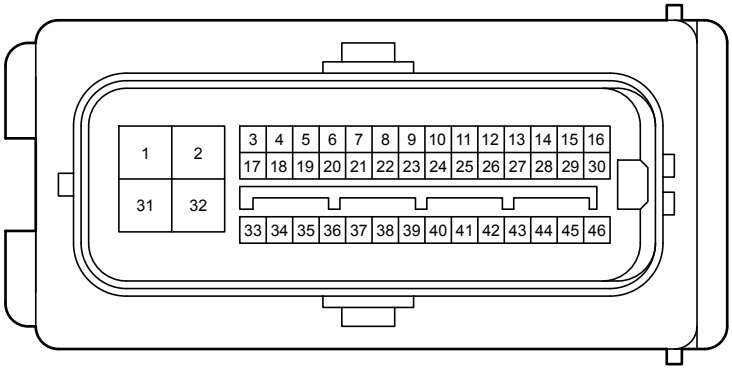

A 67
Black

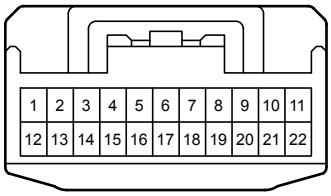

A 82
Gray

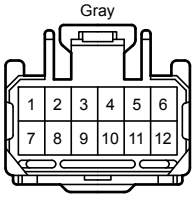

E 3
White

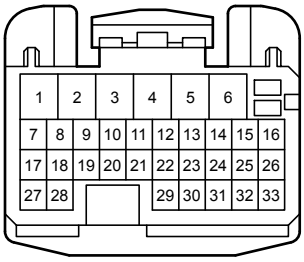

E 51
Blue

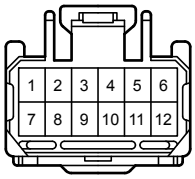

E 52
Black

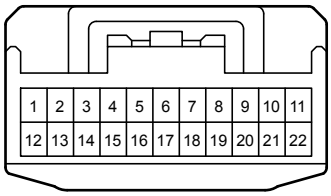

E 60
Black

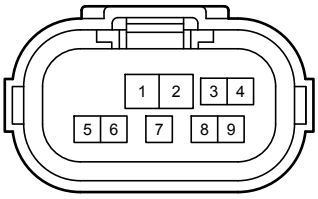

L 11
White

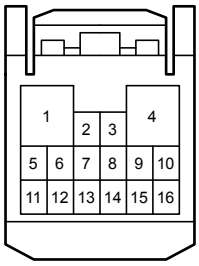

L 13
White

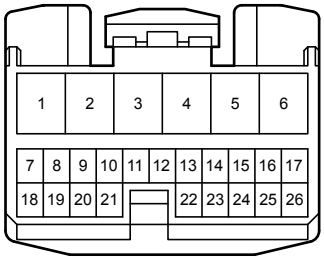

L 15
White

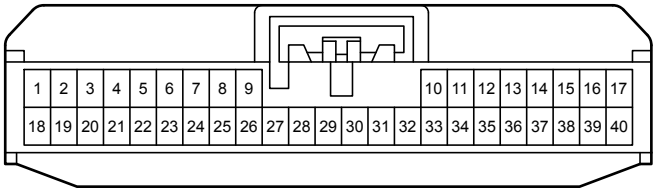

L 95
Gray

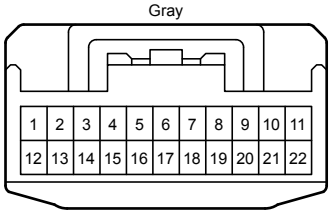

L 97
Black

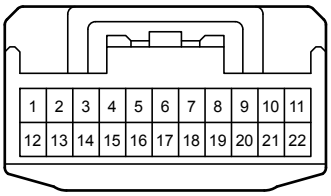

L 98
Gray

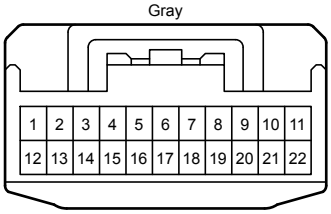

L157
White

L159
Blue

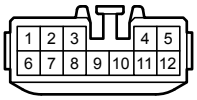

L160
Gray

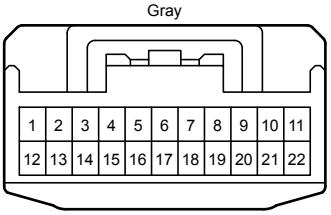

L163
Blue

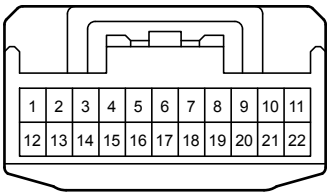

L164
Blue

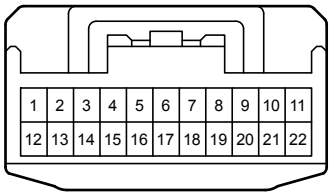

L165
Blue

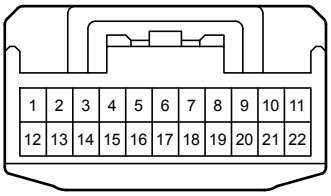

L166
White

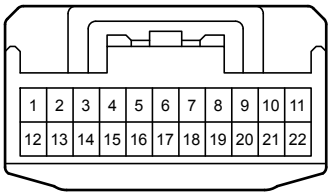

L167
White

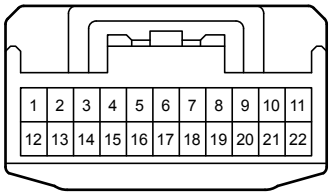

N 1
White

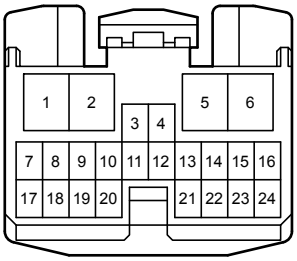

N 13
White

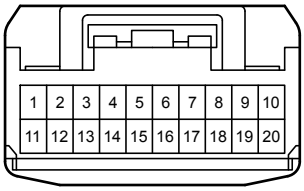

P 4
White

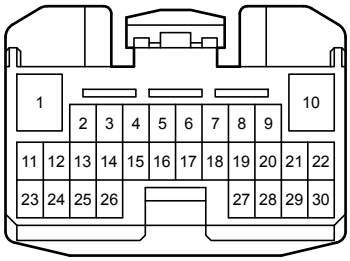

P 14
Black

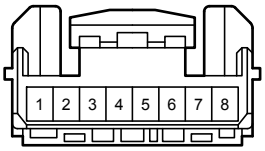

R 6
White

R 37
White

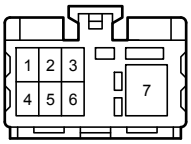

R 42
Black

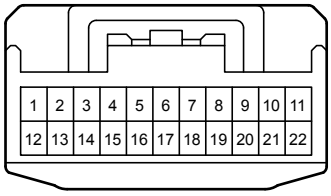

R 43
White

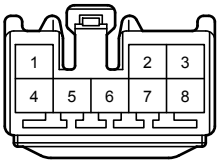

R 48
Black

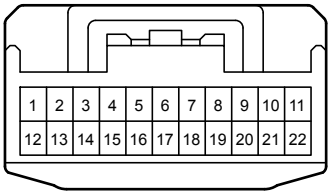

R 65
Dark Gray

R 77
Gray

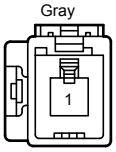

e 78
White

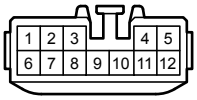

e 79
White

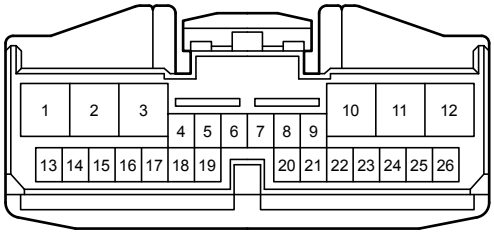

e 84
White

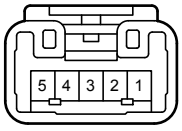

e 94
White

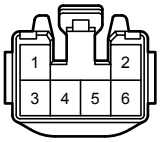

e 95
Orange

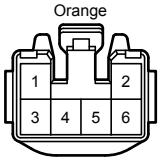

e 96
Blue

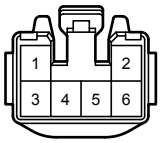

e 97
Orange

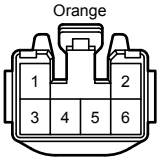

e107
Blue

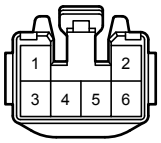

e113
Black

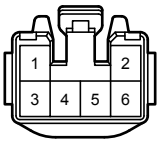

e114
Black

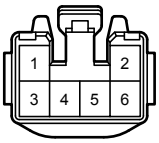

3B
Gray

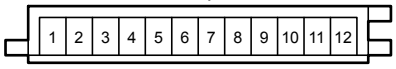

3L
Gray

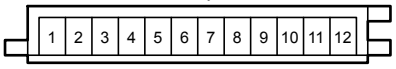

DA
White

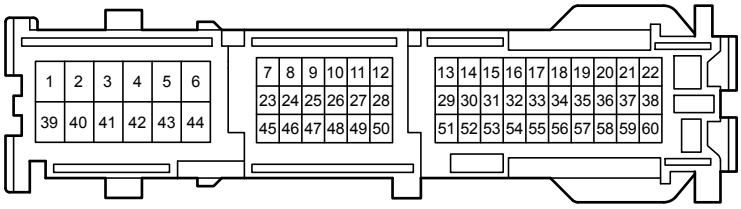

DD
Gray

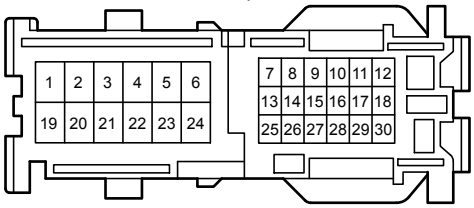

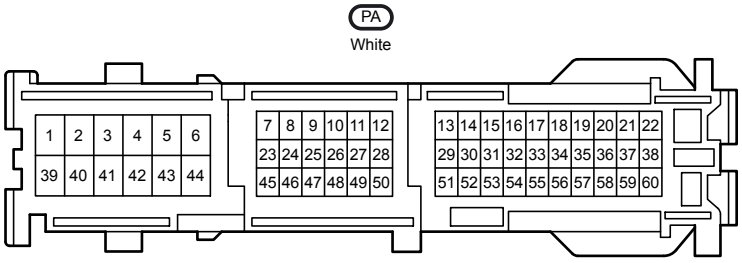
PA
White

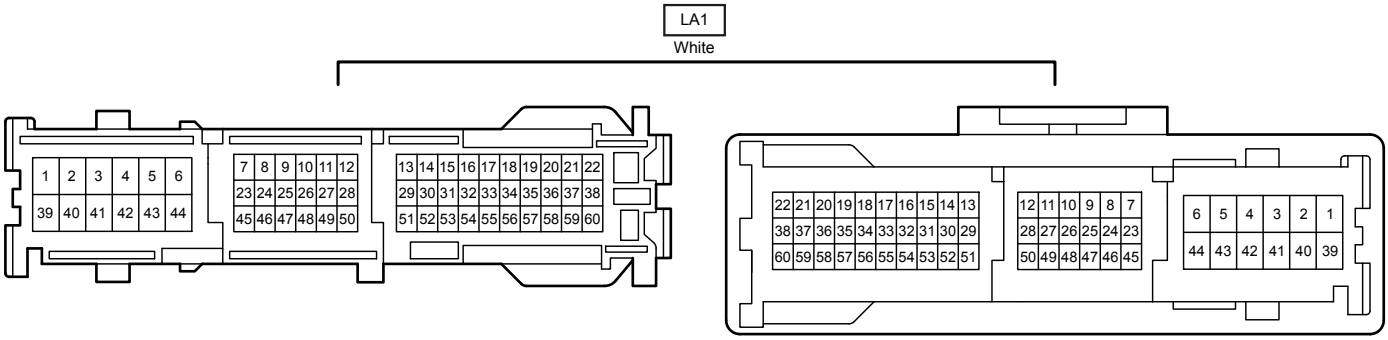
LA1
White

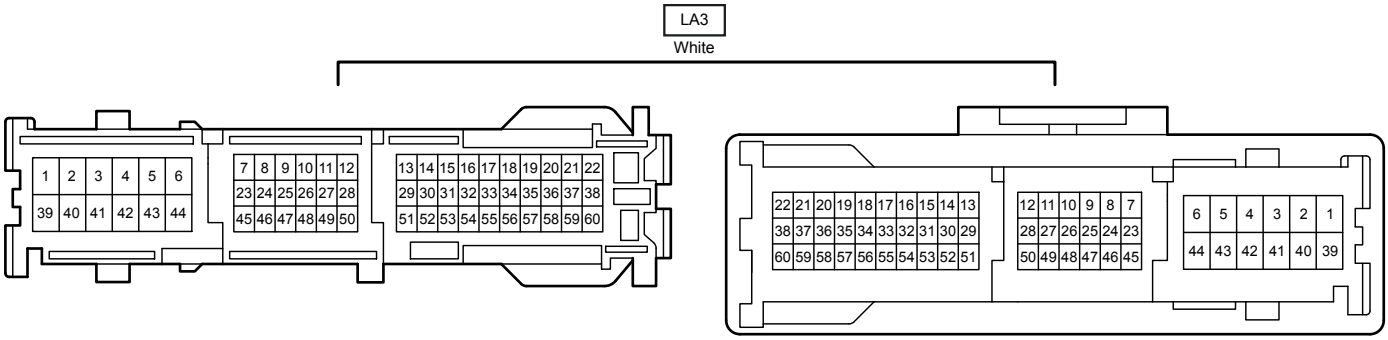
LA3
White

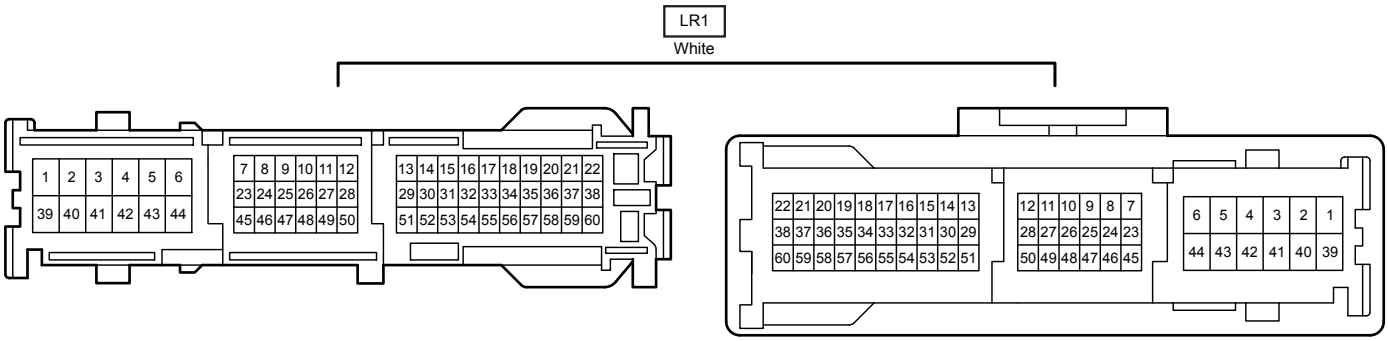
LR1
White

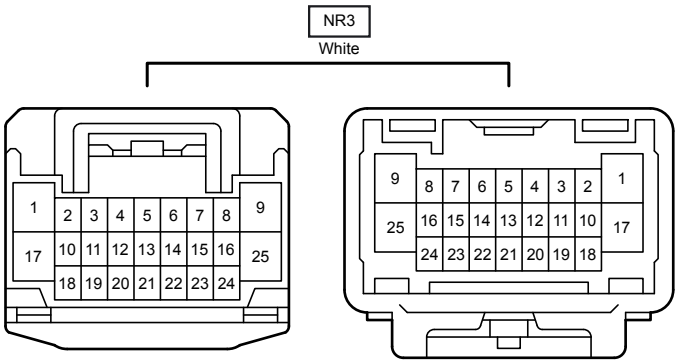
NR3
White

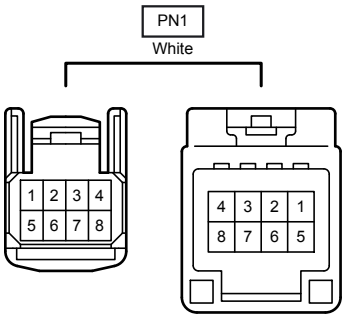
PN1
White

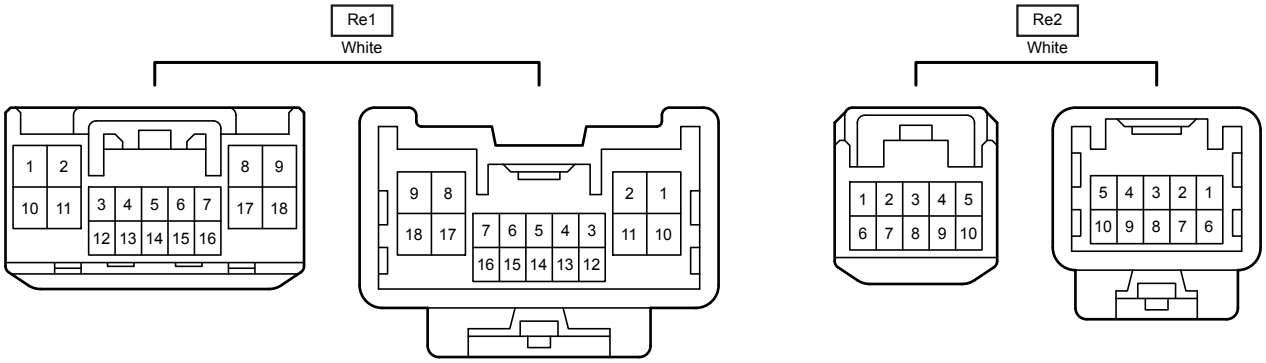
Re1
White
1 2
10 11
3 4 5 6 7
12 13 14 15 16
8 9
17 18
9 8
18 17
7 6 5 4 3
16 15 14 13 12
2 1
11 10
Re2
White
1 2 3 4 5
6 7 8 9 10
5 4 3 2 1
10 9 8 7 6