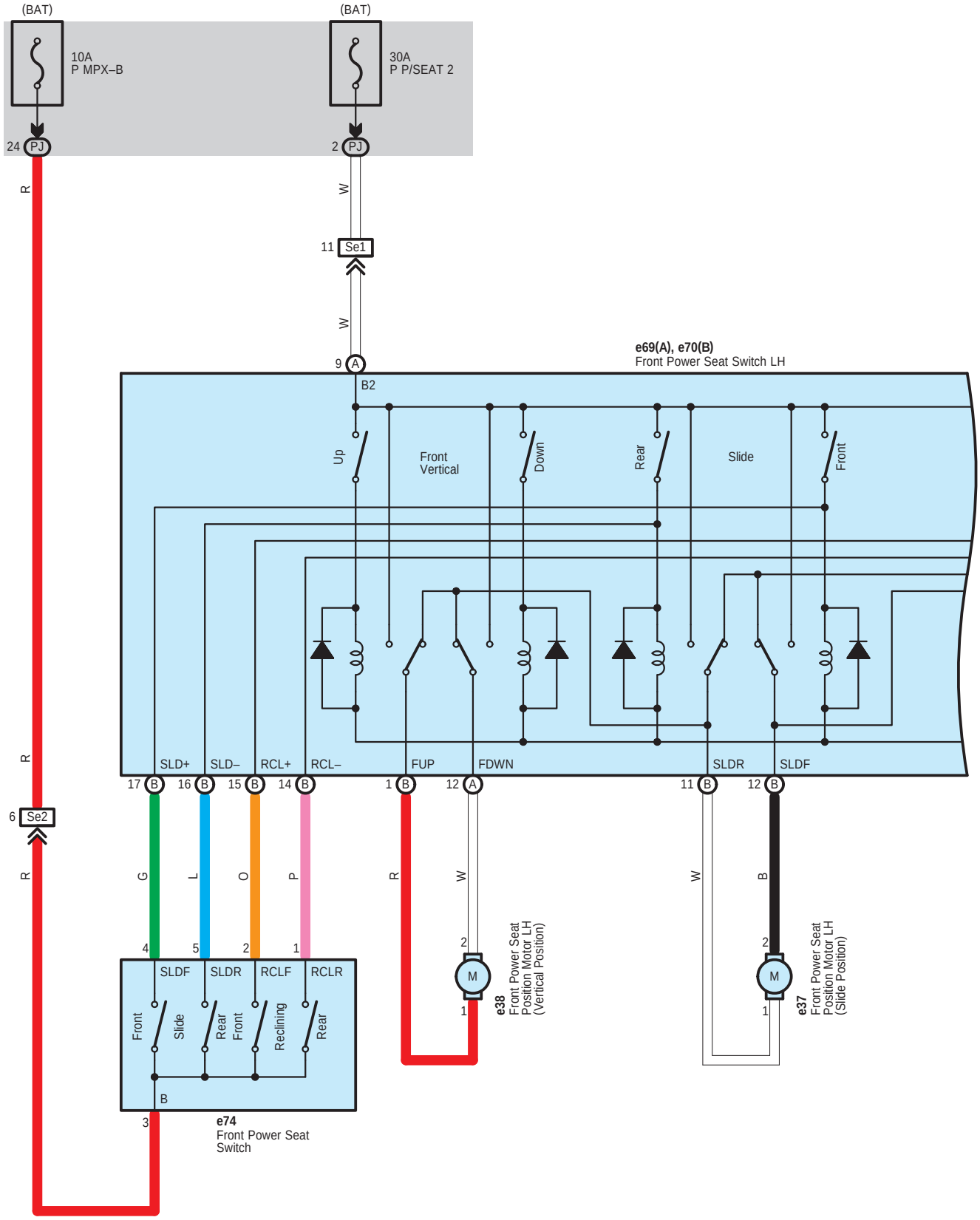
(BAT)
10A
P MPX–B
(BAT)
30A
P P/SEAT 2
24 PJ
2 PJ
R
W
11 Se1
W
9 A
e69(A), e70(B)
Front Power Seat Switch LH
B2
Up
Front Vertical
Down
Rear
Slide
Front
R
SLD+
SLD–
RCL+
RCL–
FUP
FDWN
SLDR
SLDF
17 B
16 B
15 B
14 B
1 B
12 A
11 B
12 B
6 Se2
R
G
L
O
P
R
W
W
B
4
5
2
1
2
1
2
1
SLDF
SLDR
RCLF
RCLR
Front
Slide
Rear Front
Reclining
Rear
B
3
e74
Front Power Seat Switch
M
e38
Front Power Seat Position Motor LH (Vertical Position)
M
e37
Front Power Seat Position Motor LH (Slide Position)

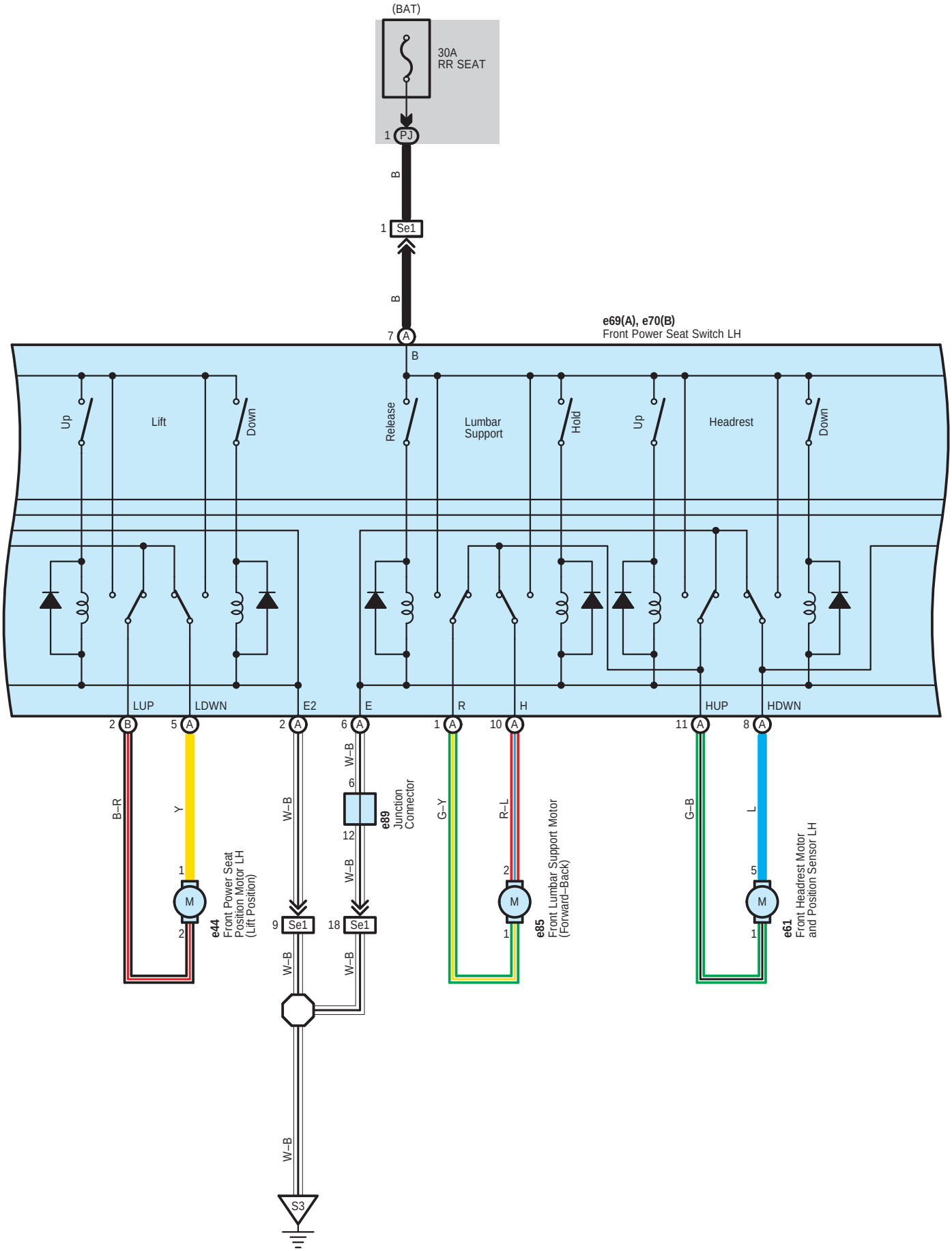
(BAT)
30A
RR SEAT
1 PJ
B
1 Se1
B
7 A
e69(A), e70(B)
Front Power Seat Switch LH
B
Up
Lift
Down
Release
Lumbar Support
Hold
Up
Headrest
Down
LUP
LDWN
E2
E
R
H
HUP
HDWN
2 B
5 A
2 A
6 A
1 A
10 A
11 A
8 A
B–R
Y
W–B
W–B
6
12
e89
Junction Connector
G–Y
R–L
G–B
L
1
2
M
e44
Front Power Seat Position Motor LH (Lift Position)
9 Se1
18 Se1
W–B
W–B
2
1
M
e85
Front Lumbar Support Motor (Forward–Back)
5
1
M
e61
Front Headrest Motor and Position Sensor LH
W–B
S3

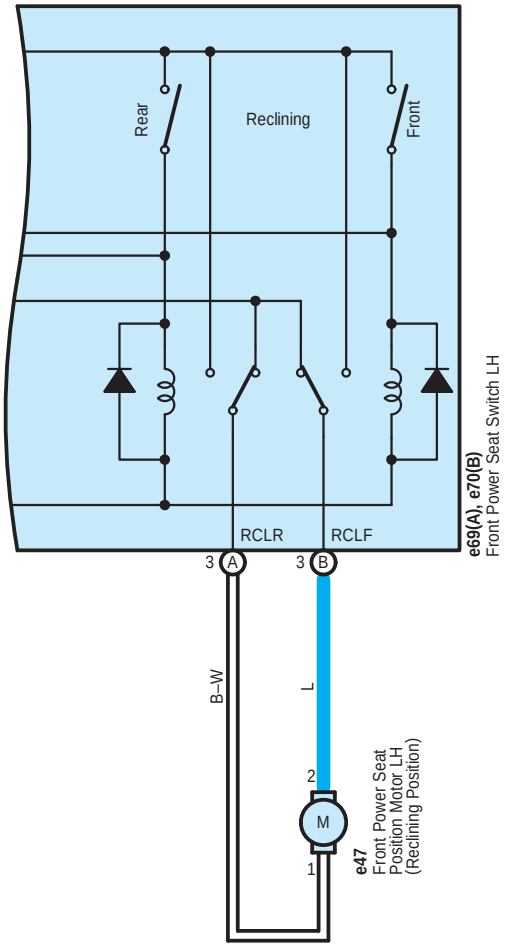
Rear
Reclining
Front
RCLR
RCLF
3
A
3
B
B–W
L
2
M
1
e47
Front Power Seat
Position Motor LH
(Reclining Position)
e69(A), e70(B)
Front Power Seat Switch LH

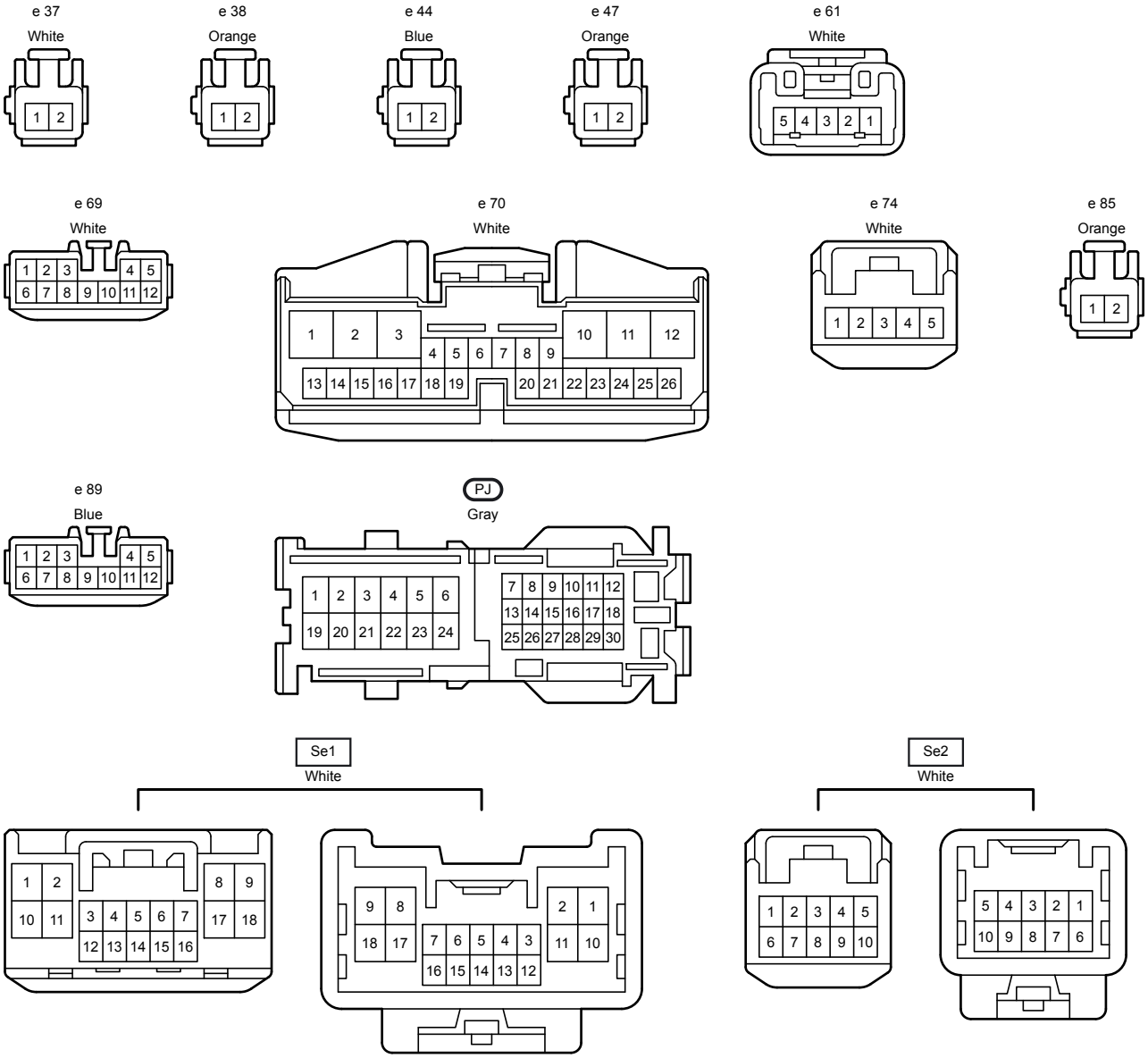
e 37
White
e 38
Orange
e 44
Blue
e 47
Orange
e 61
White
e 69
White
e 70
White
e 74
White
e 85
Orange
e 89
Blue
PJ
Gray
Se1
White
Se2
White