## 11 LS 600h L / LS 600h (Before Nov. 2009 Production)

(Cont. next page)

Vehicle Dynamics Integrated Management (for Hybrid Vehicle) and Brake Hold System

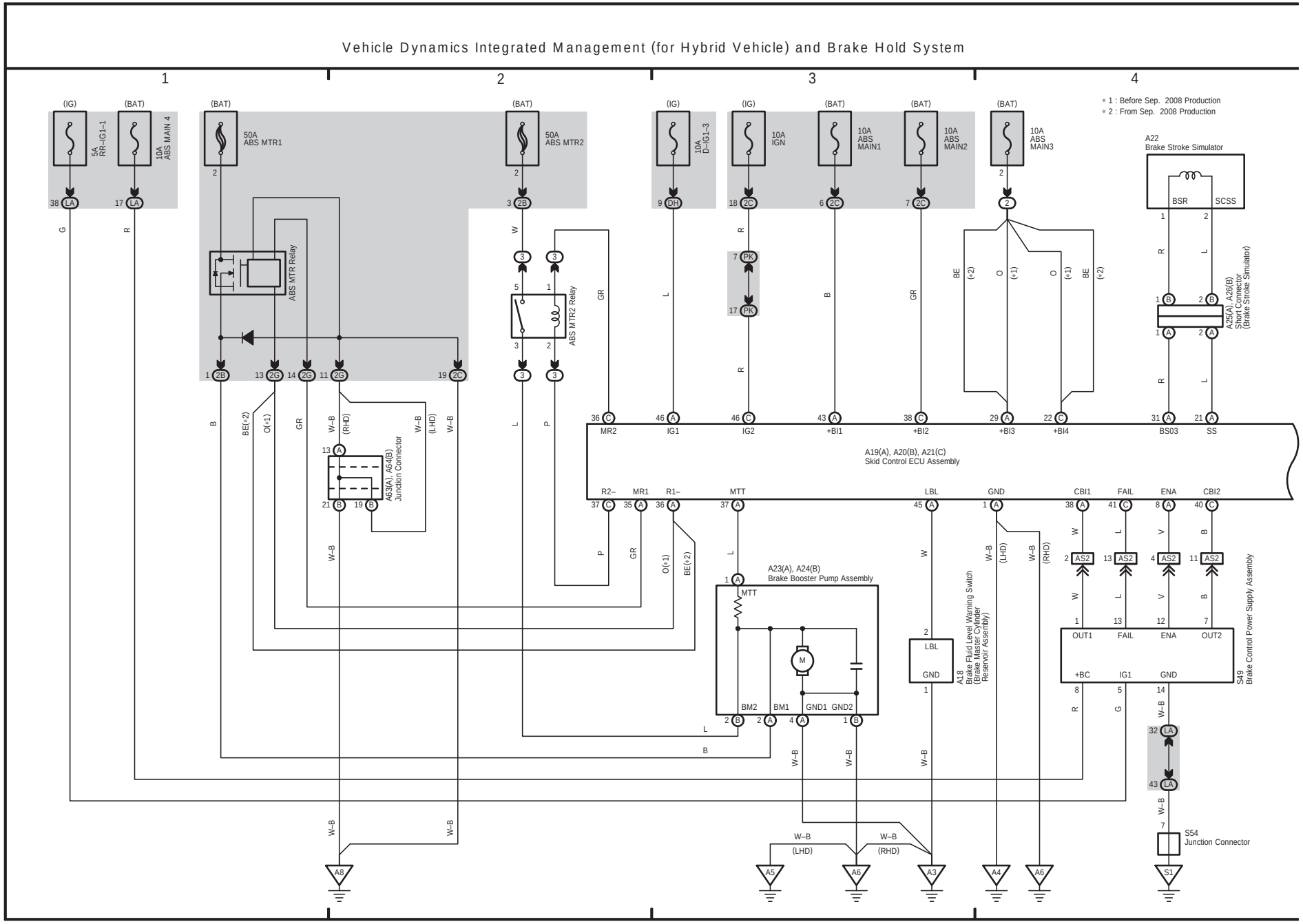

(Cont. next page)

Vehicle Dynamics Integrated Management (for Hybrid Vehicle) and Brake Hold System

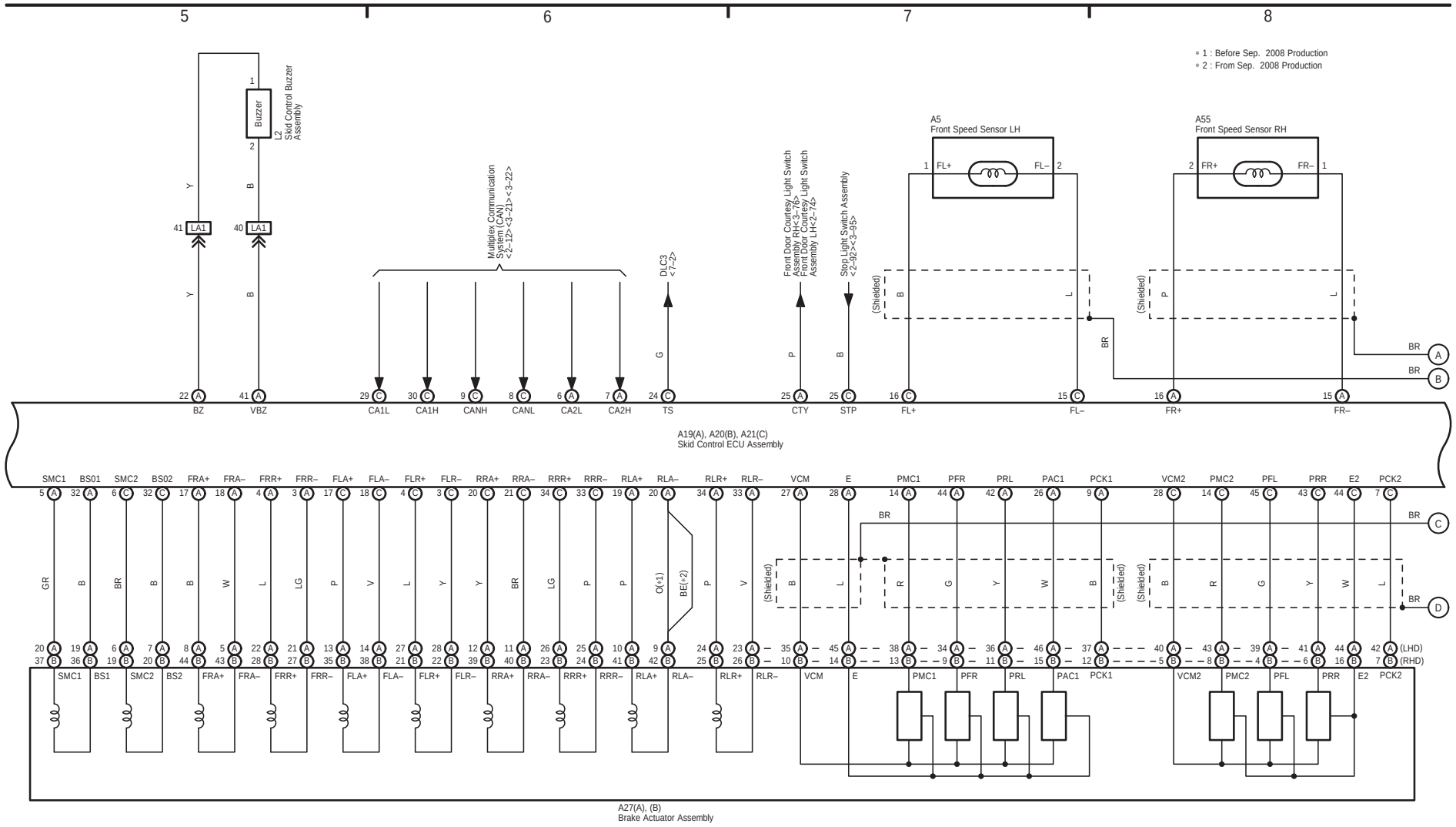

## 11 LS 600h L / LS 600h (Before Nov. 2009 Production) (Cont' d)

(Cont. next page)

Vehicle Dynamics Integrated Management (for Hybrid Vehicle) and Brake Hold System

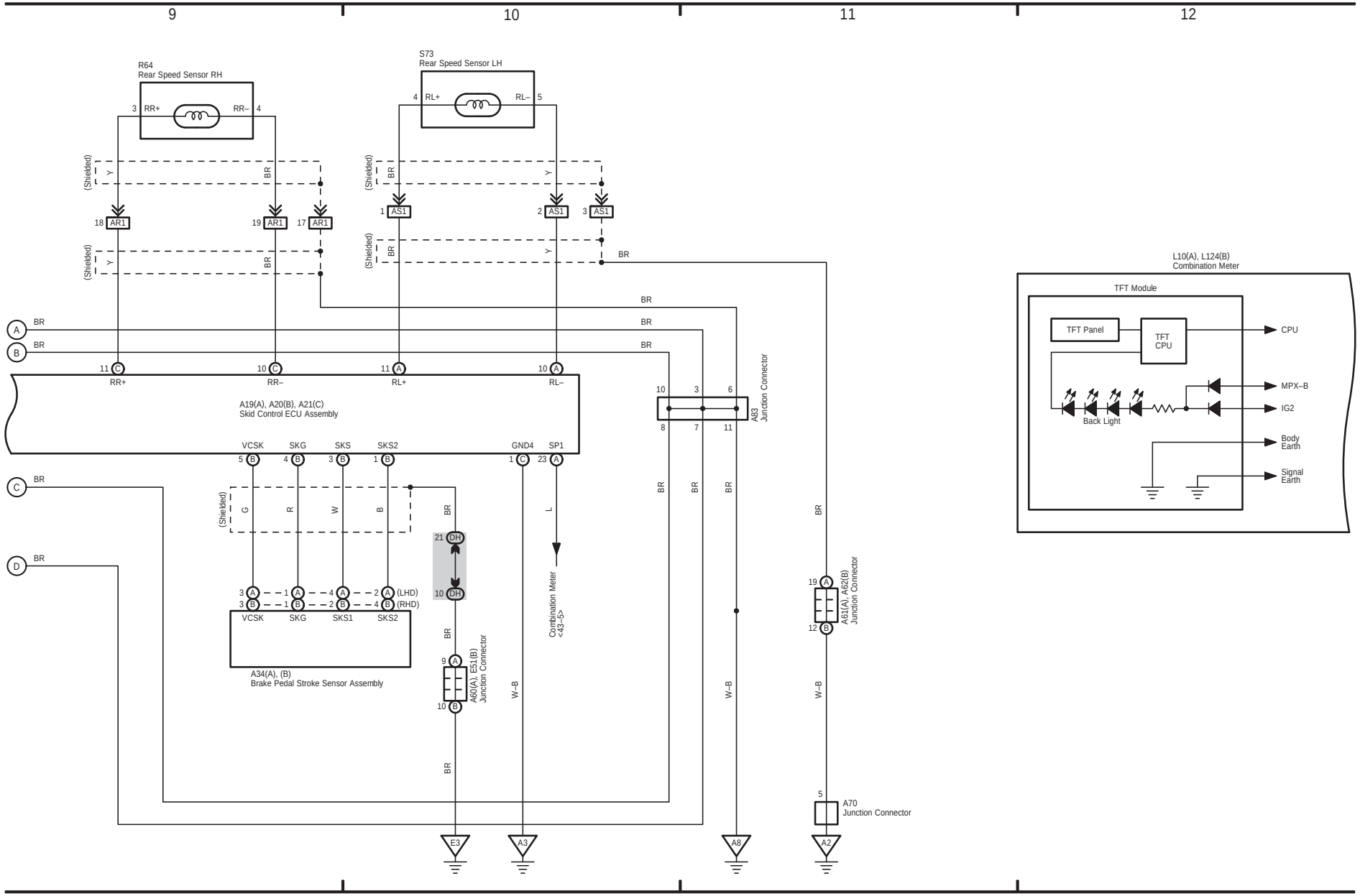
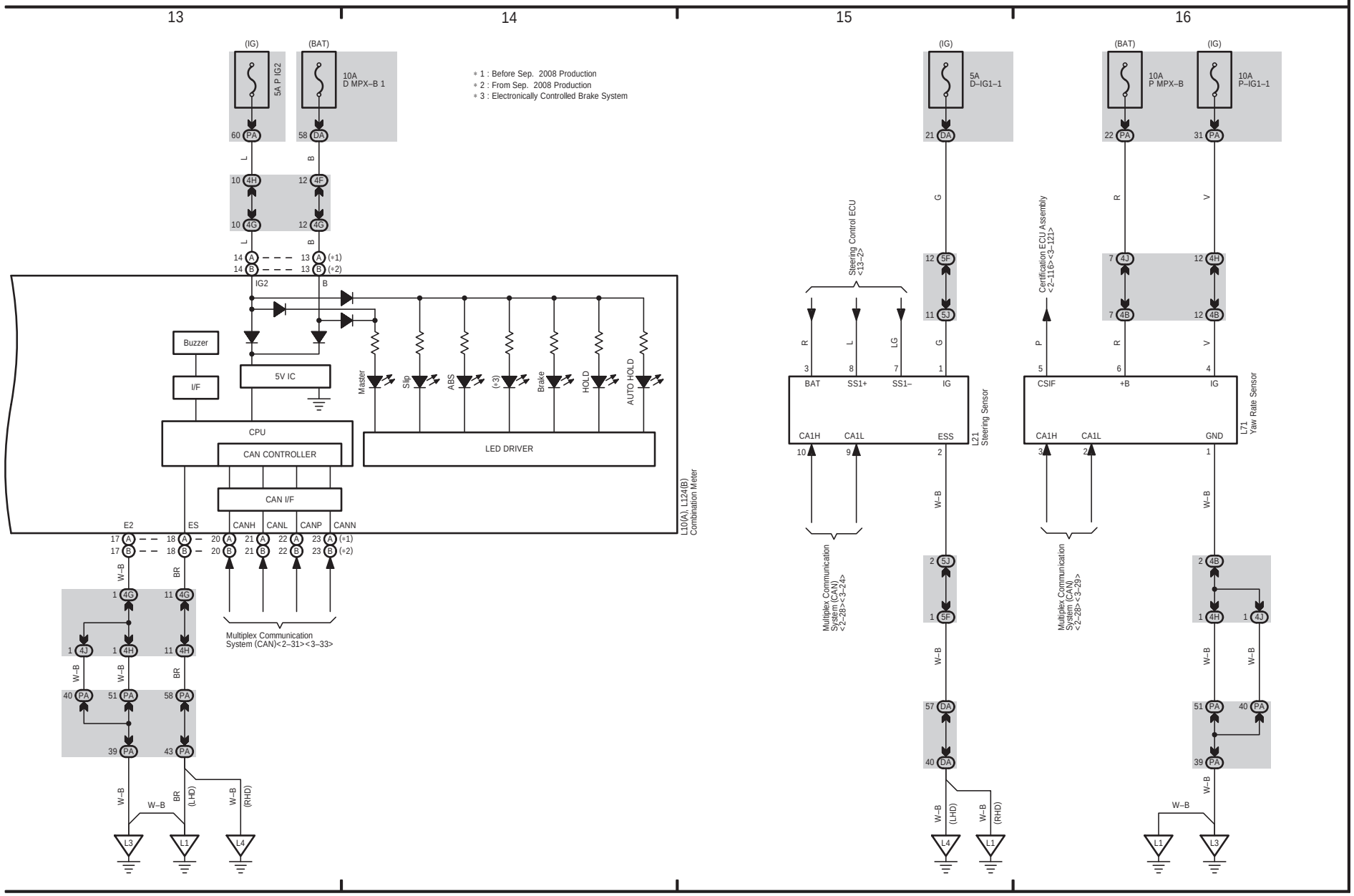
Vehicle Dynamics Integrated Management (for Hybrid Vehicle) and Brake Hold System