17 LS 600h L / LS 600h (Before Nov. 2009 Production)

(Cont. next page)

Front Pre–Crash Safety System, Rear Pre–Crash Safety System and Lane Keeping Assist

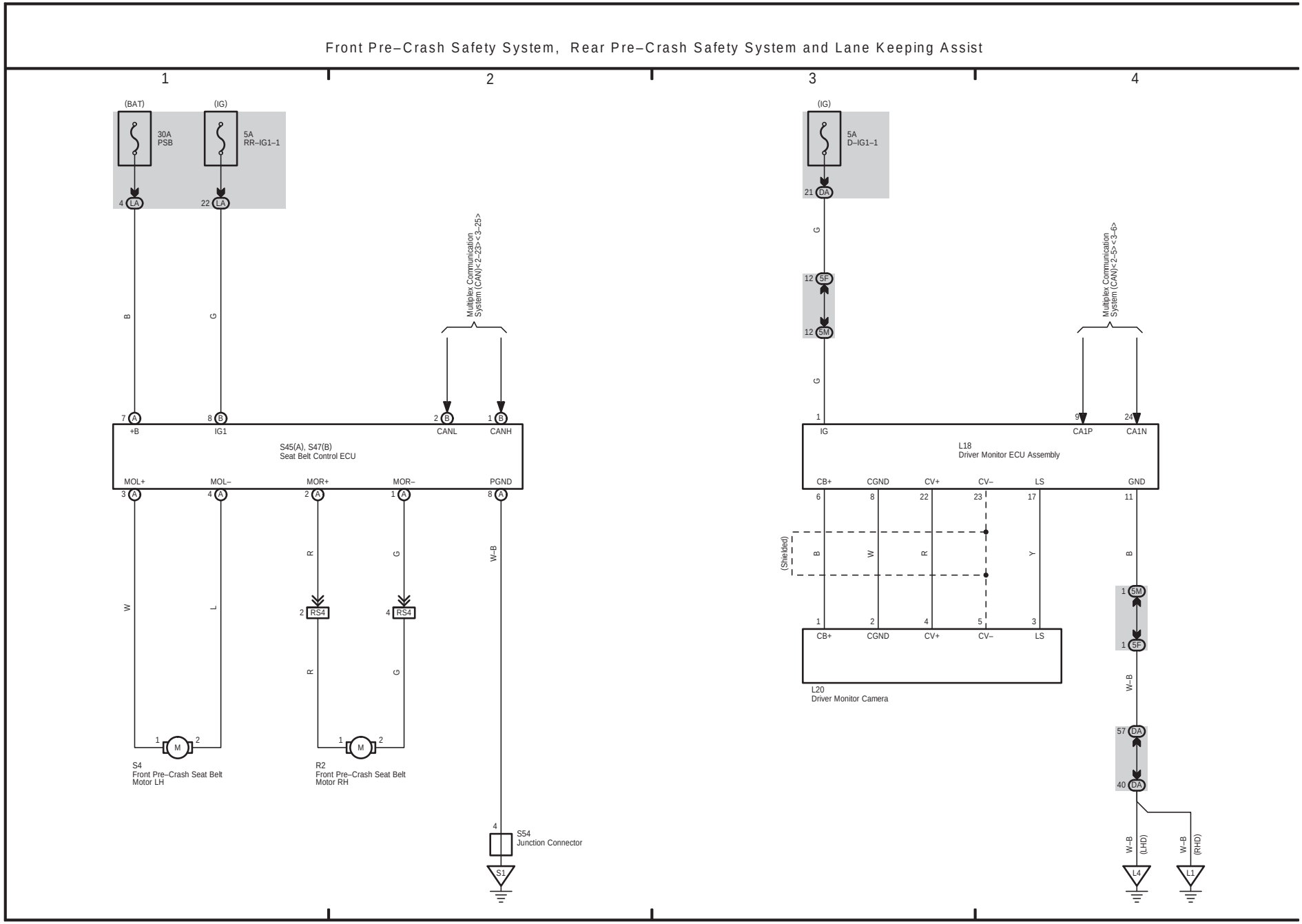

(Cont. next page)

Front Pre–Crash Safety System, Rear Pre–Crash Safety System and Lane Keeping Assist

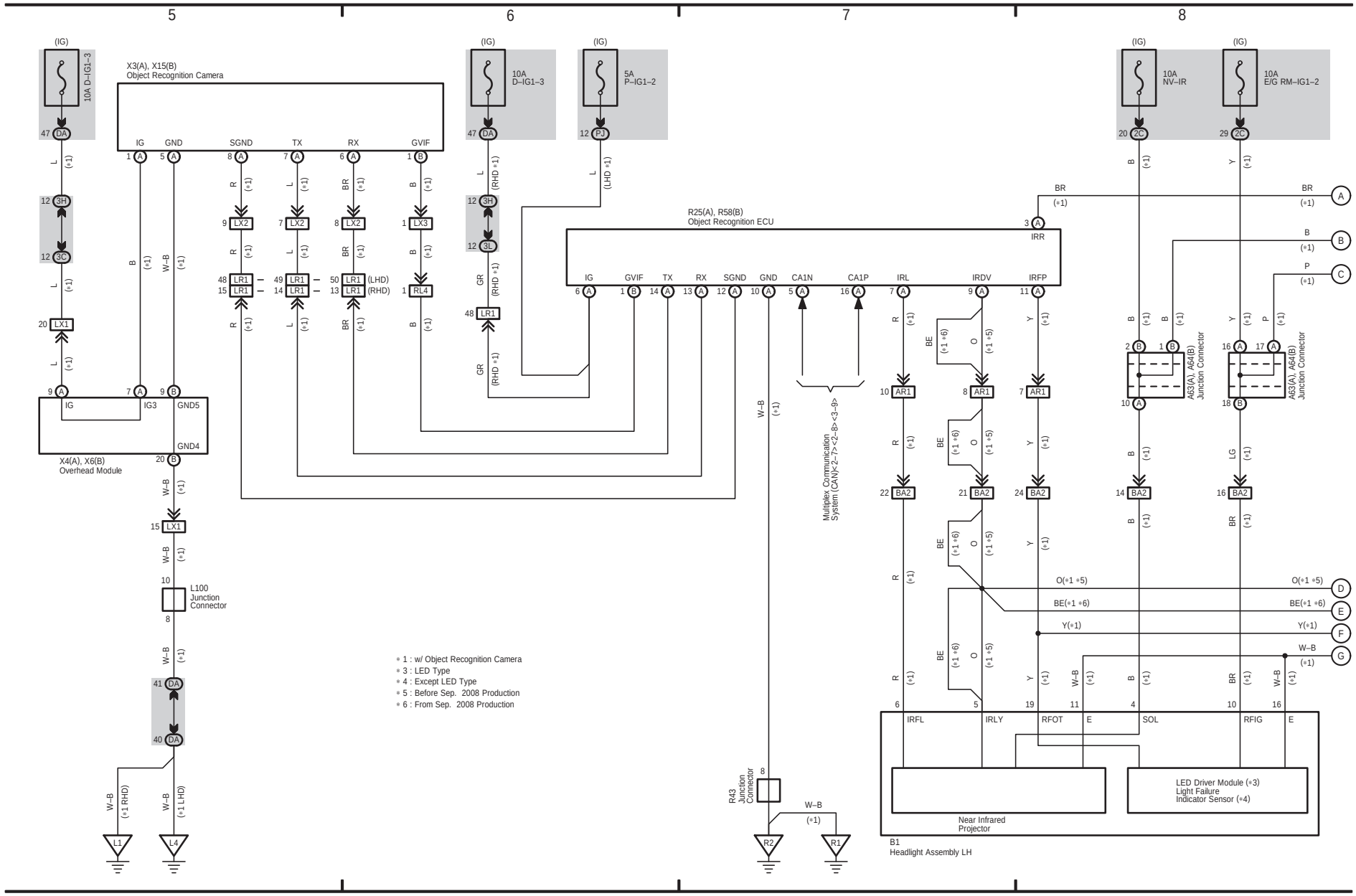

17 LS 600h L / LS 600h (Before Nov. 2009 Production) (Cont' d)

(Cont. next page)

Front Pre–Crash Safety System, Rear Pre–Crash Safety System and Lane Keeping Assist

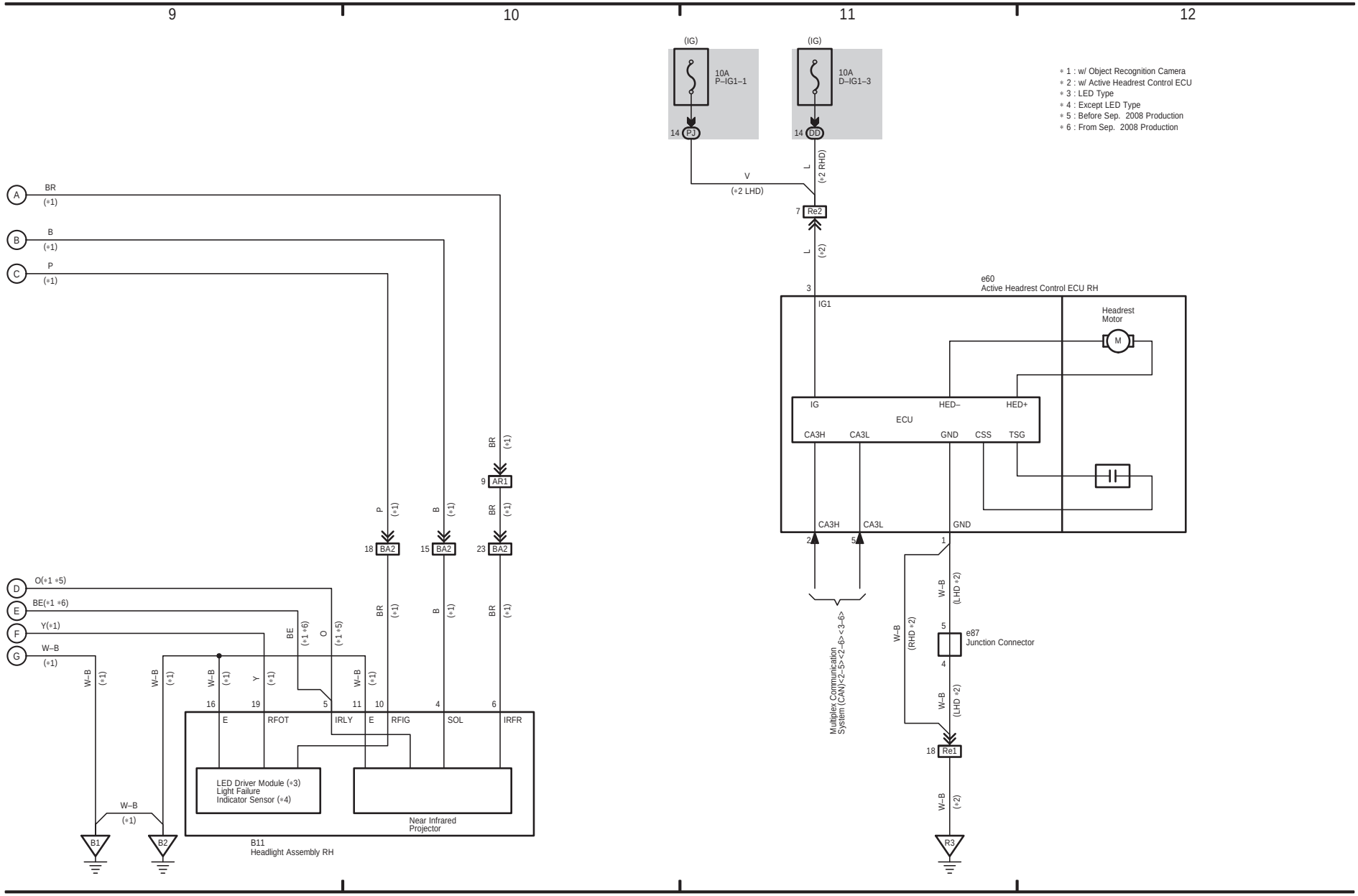

(Cont. next page)

Front Pre–Crash Safety System, Rear Pre–Crash Safety System and Lane Keeping Assist

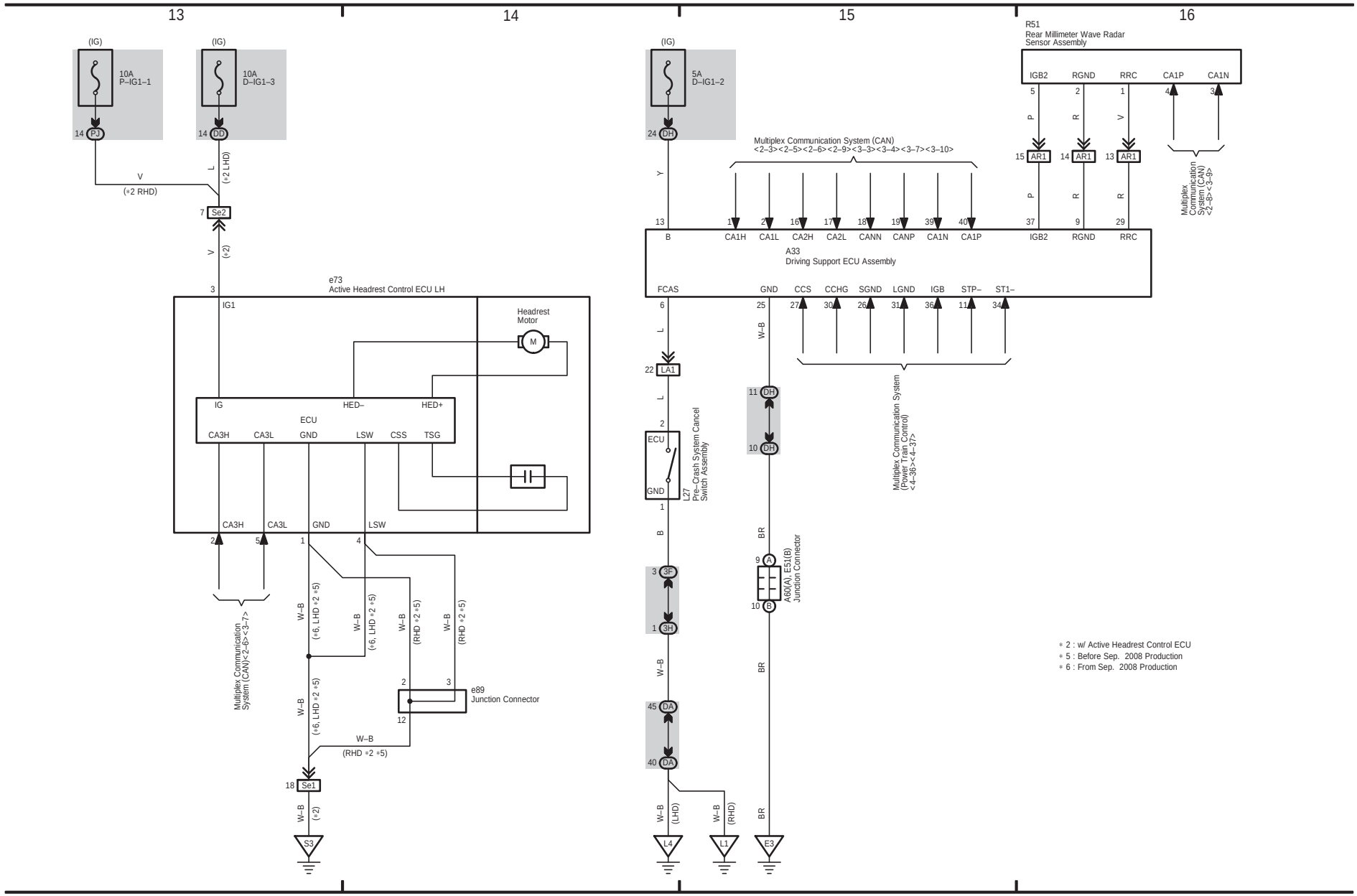

17 LS 600h L / LS 600h (Before Nov. 2009 Production) (Cont' d)

Front Pre–Crash Safety System, Rear Pre–Crash Safety System and Lane Keeping Assist

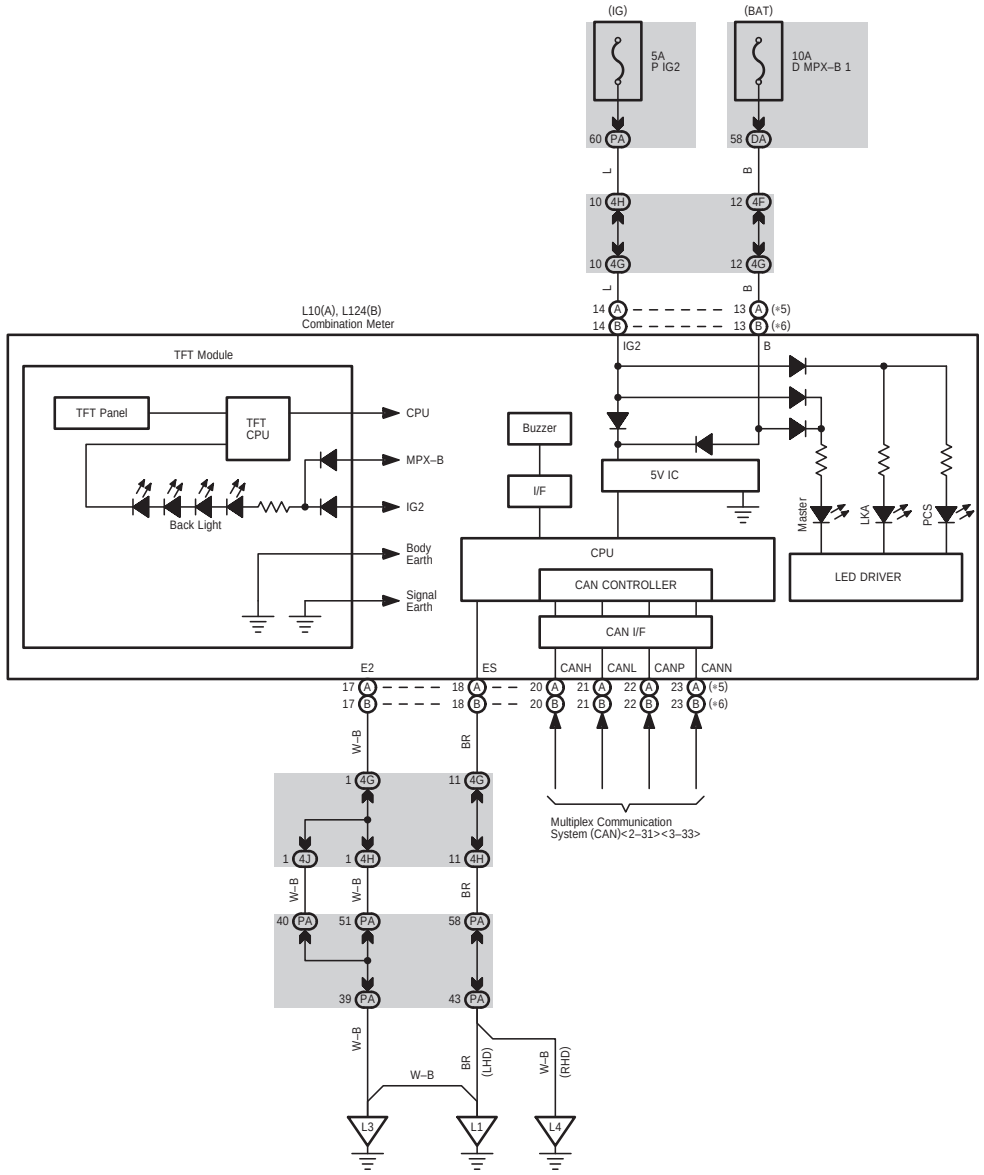

* 5 : Before Sep. 2008 Production
* 6 : From Sep. 2008 Production