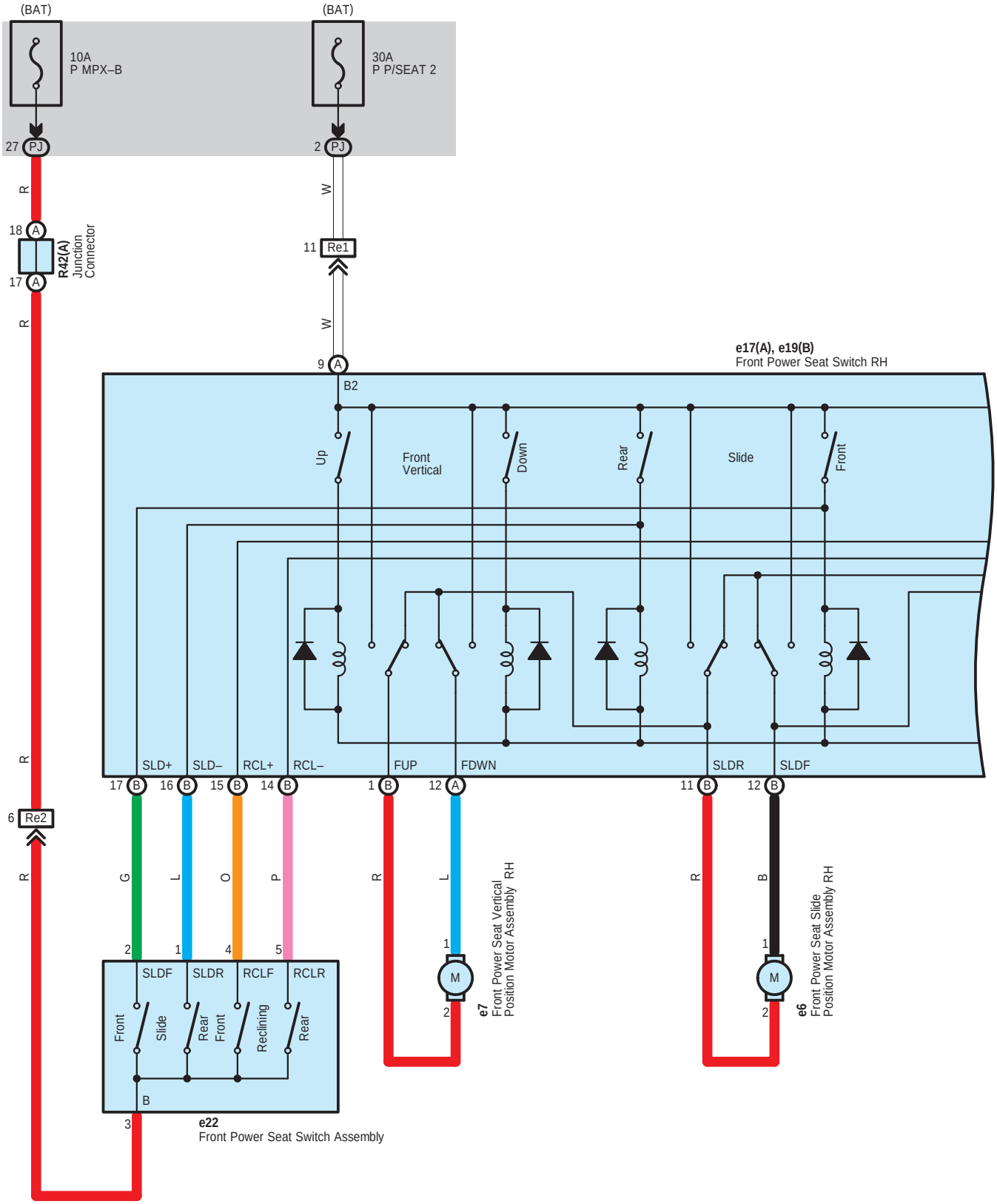
(BAT)
10A
P MPX–B
(BAT)
30A
P P/SEAT 2
27 PJ
2 PJ
R
W
18 A
17 A
R42(A)
Junction
Connector
11 Re1
W
R
9 A
e17(A), e19(B)
Front Power Seat Switch RH
B2
Up
Front
Vertical
Down
Rear
Slide
Front
SLD+
SLD–
RCL+
RCL–
FUP
FDWN
SLDR
SLDF
17 B
16 B
15 B
14 B
1 B
12 A
11 B
12 B
R
6 Re2
R
G
L
O
P
R
L
R
B
2
1
4
5
1
2
1
2
SLDF
SLDR
RCLF
RCLR
Front
Slide
Rear
Front
Reclining
Rear
B
3
e22
Front Power Seat Switch Assembly
M
e7
Front Power Seat Vertical
Position Motor Assembly RH
M
e6
Front Power Seat Slide
Position Motor Assembly RH

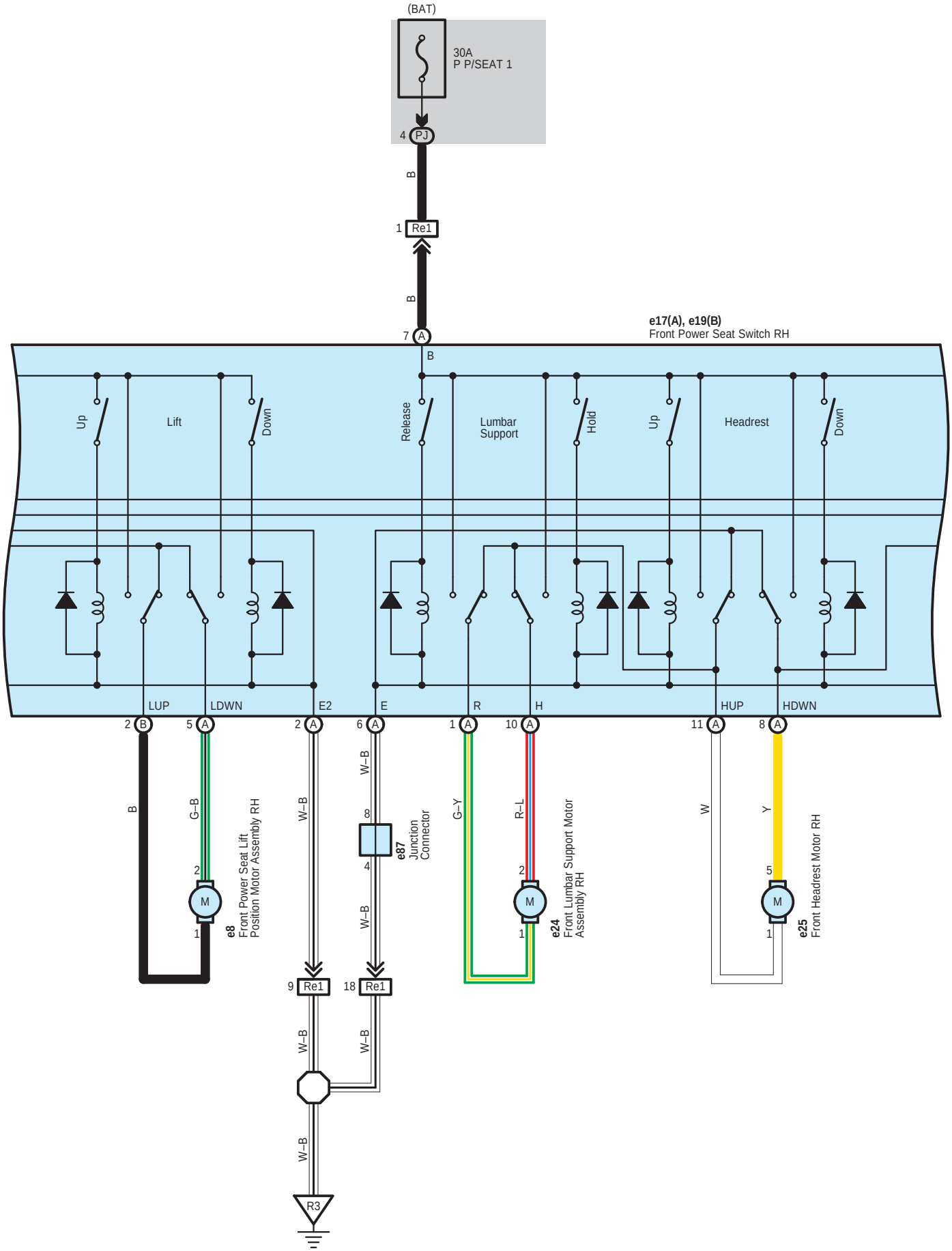
(BAT)
30A
P P/SEAT 1
4 PJ
B
1 Re1
B
7 A
B
e17(A), e19(B)
Front Power Seat Switch RH
Up
Lift
Down
Release
Lumbar Support
Hold
Up
Headrest
Down
LUP
LDWN
E2
E
R
H
HUP
HDWN
2 B
5 A
2 A
6 A
1 A
10 A
11 A
8 A
B
G–B
W–B
W–B
G–Y
R–L
W
Y
e8
Front Power Seat Lift Position Motor Assembly RH
e87
Junction Connector
e24
Front Lumbar Support Motor Assembly RH
e25
Front Headrest Motor RH
M
9 Re1
18 Re1
W–B
W–B
W–B
R3

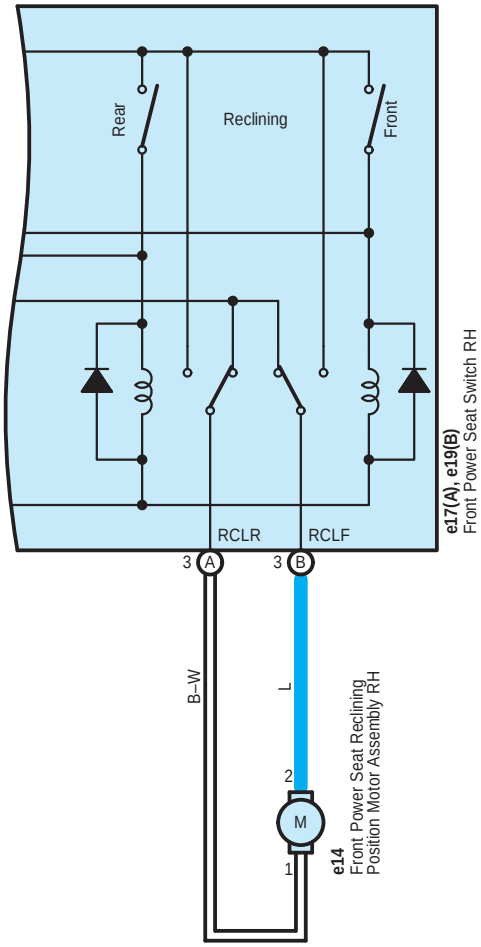
Rear
Reclining
Front
RCLR
RCLF
3
A
3
B
B–W
L
2
M
1
e14
Front Power Seat Reclining
Position Motor Assembly RH
e17(A), e19(B)
Front Power Seat Switch RH

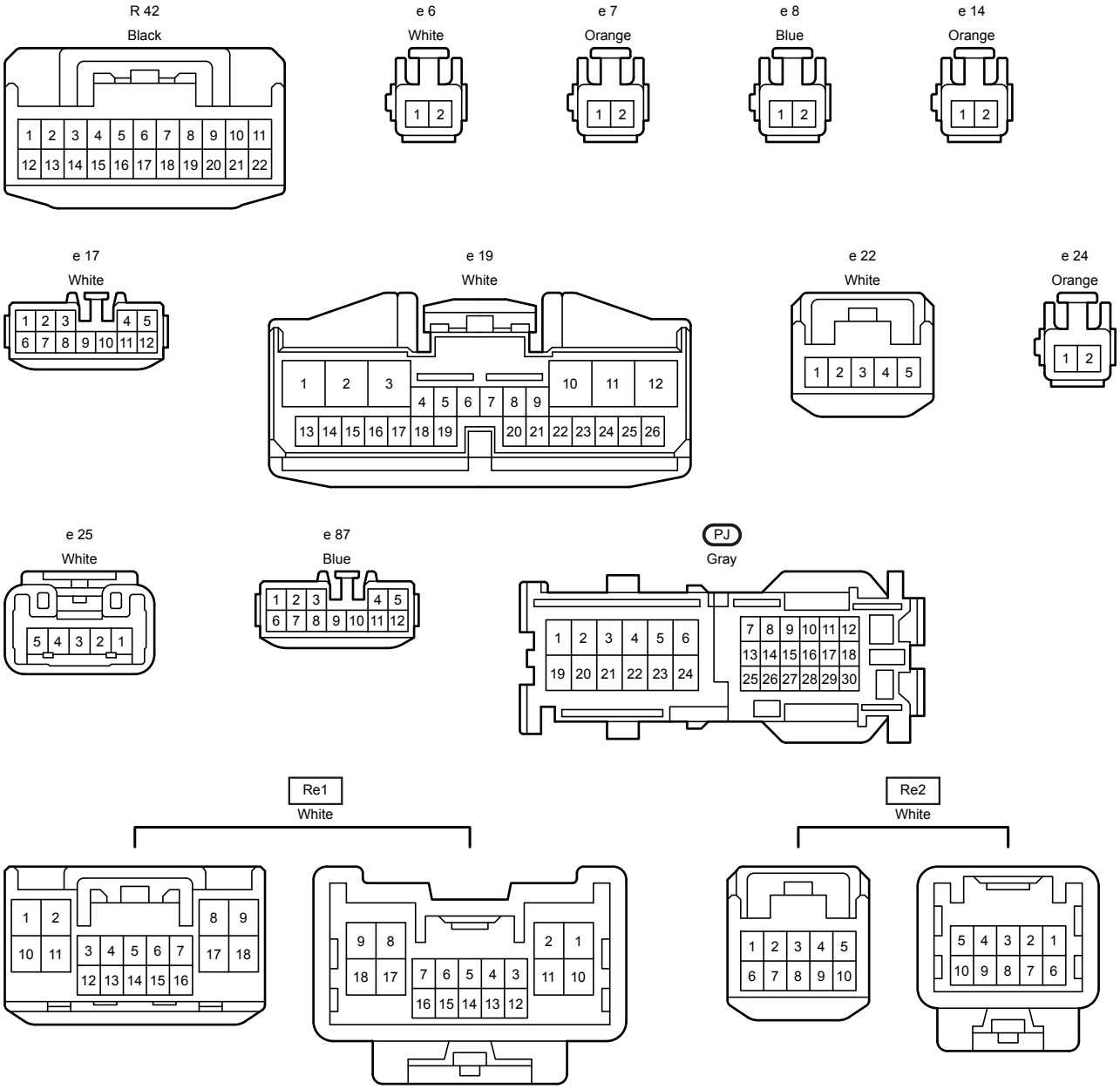
R 42
Black
e 6
White
e 7
Orange
e 8
Blue
e 14
Orange
e 17
White
e 19
White
e 22
White
e 24
Orange
e 25
White
e 87
Blue
PJ
Gray
Re1
White
Re2
White