(Cont. next page)

Power Source (8GR-FKS) (RHD)

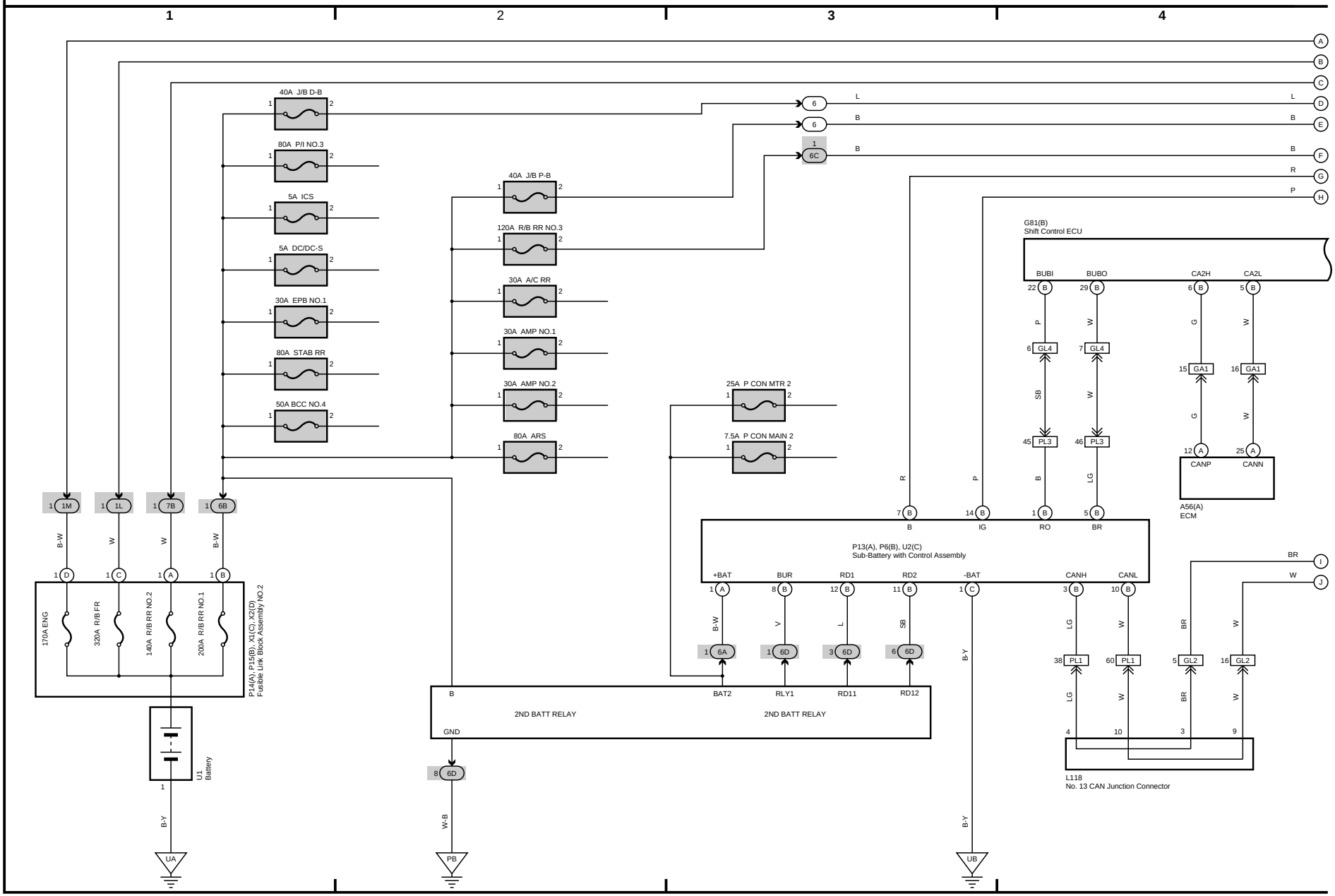

(Cont. next page)

Power Source (8GR-FKS) (RHD)

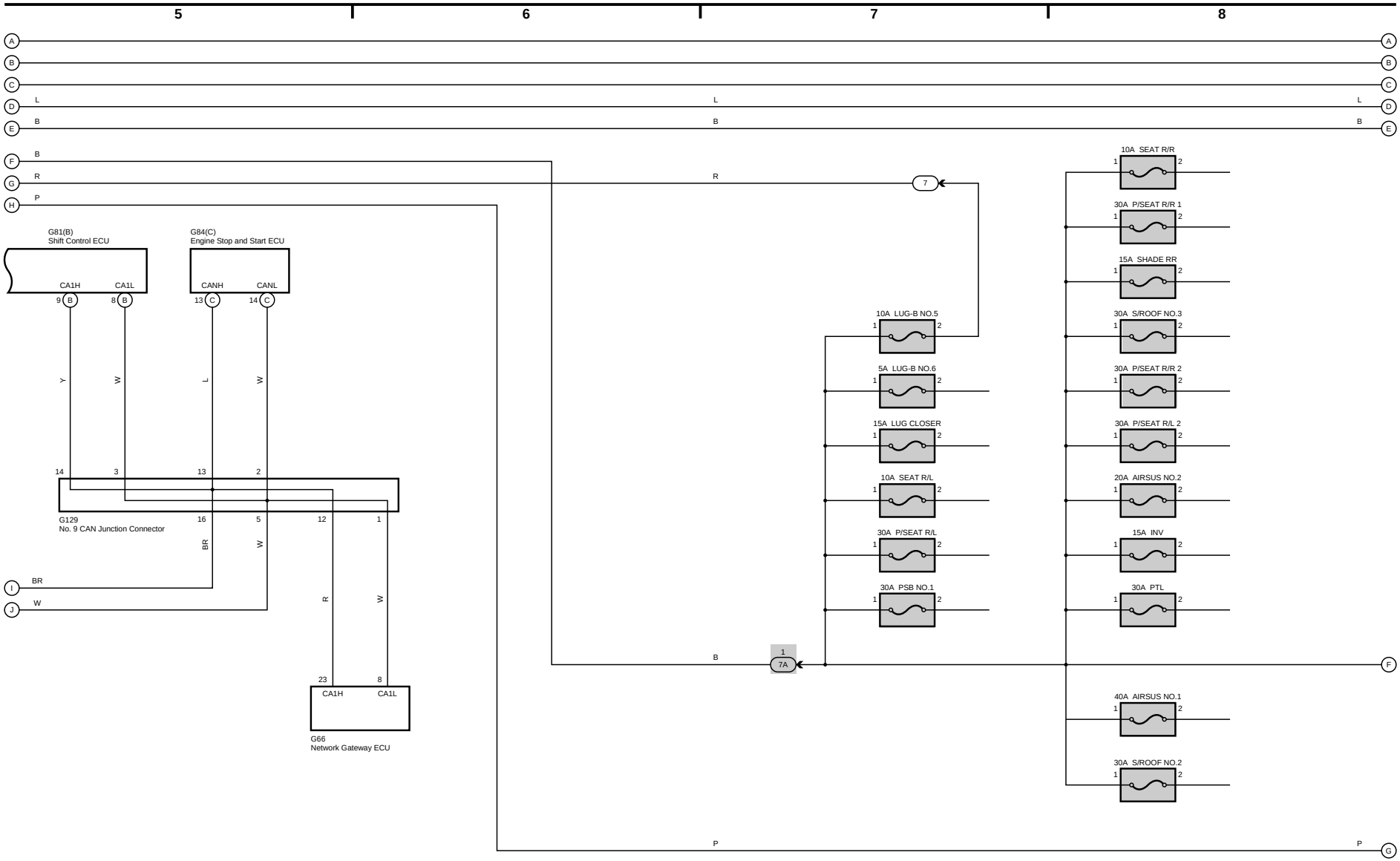

(Cont. next page)

Power Source (8GR-FKS) (RHD)

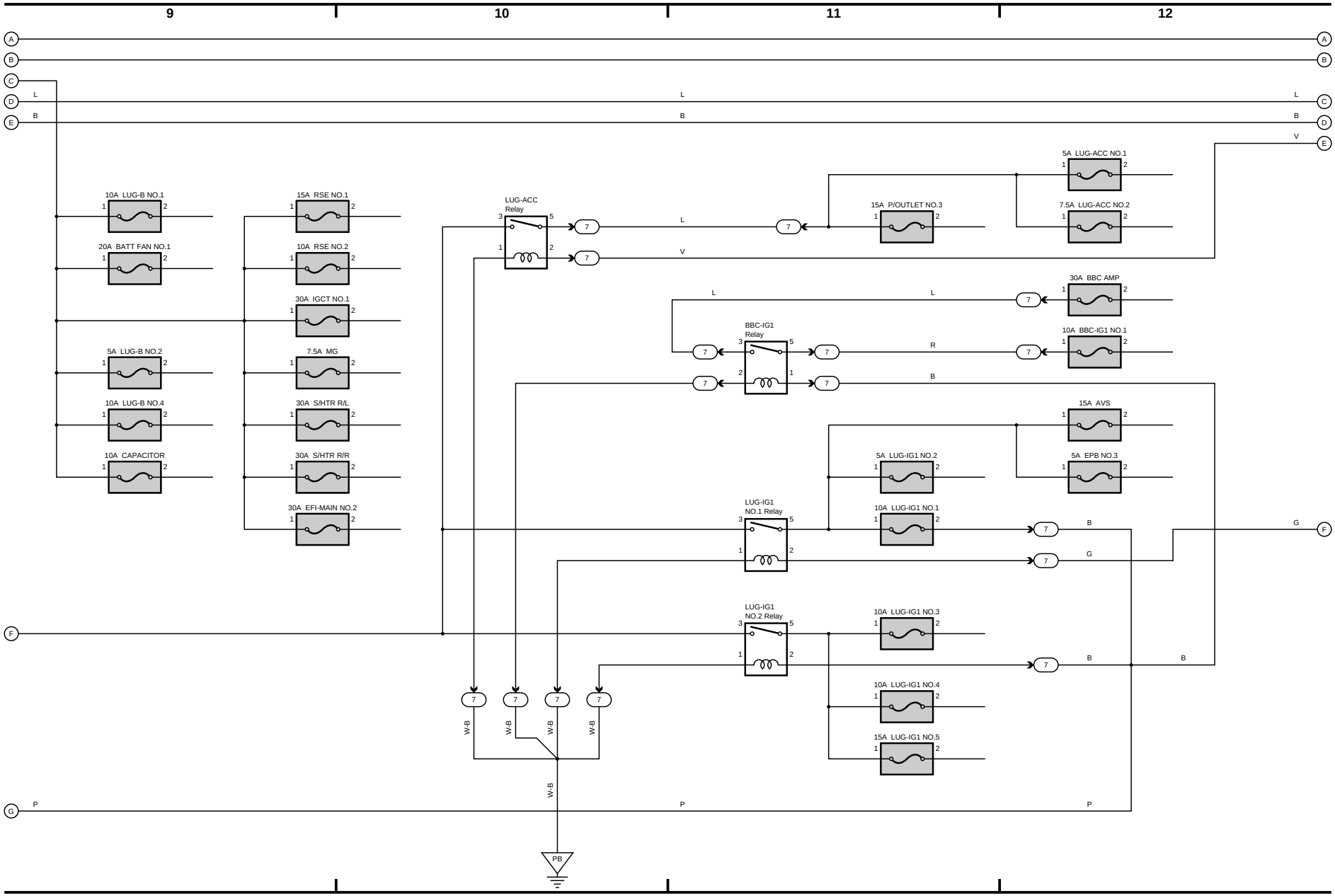

(Cont. next page)

Power Source (8GR-FKS) (RHD)

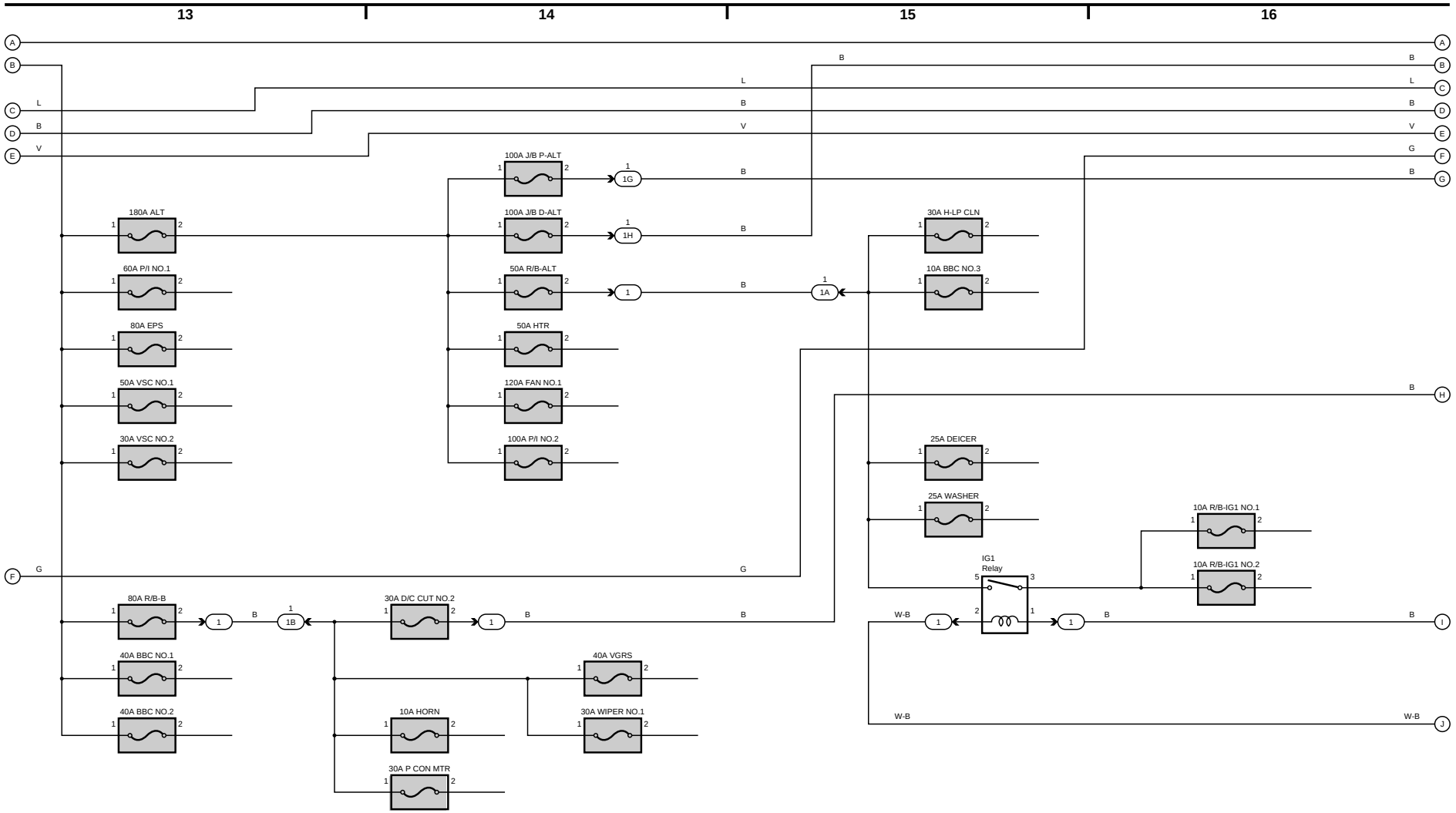

(Cont. next page)

Power Source (8GR-FKS) (RHD)

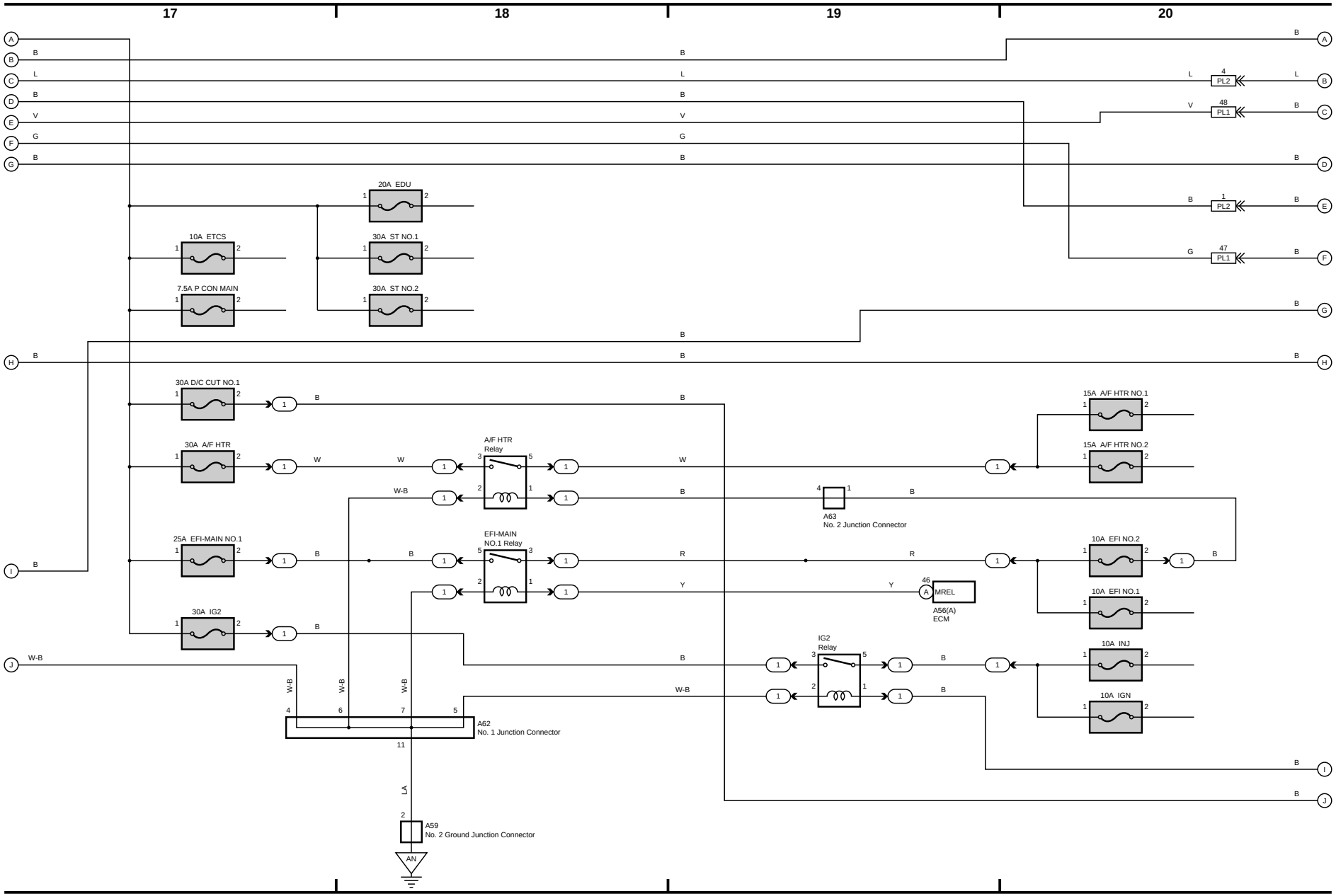

(Cont. next page)

Power Source (8GR-FKS) (RHD)

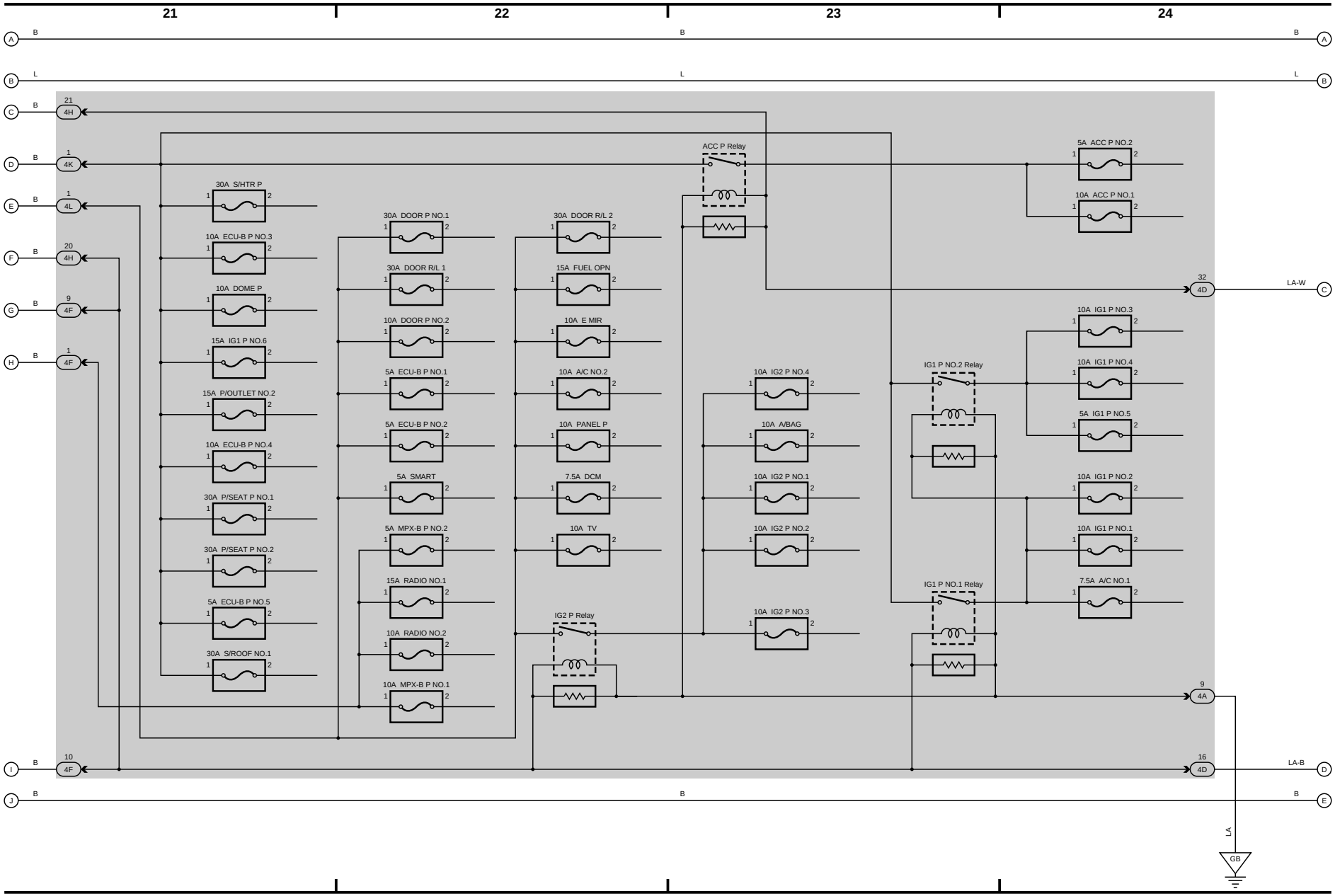

(Cont. next page)

Power Source (8GR-FKS) (RHD)

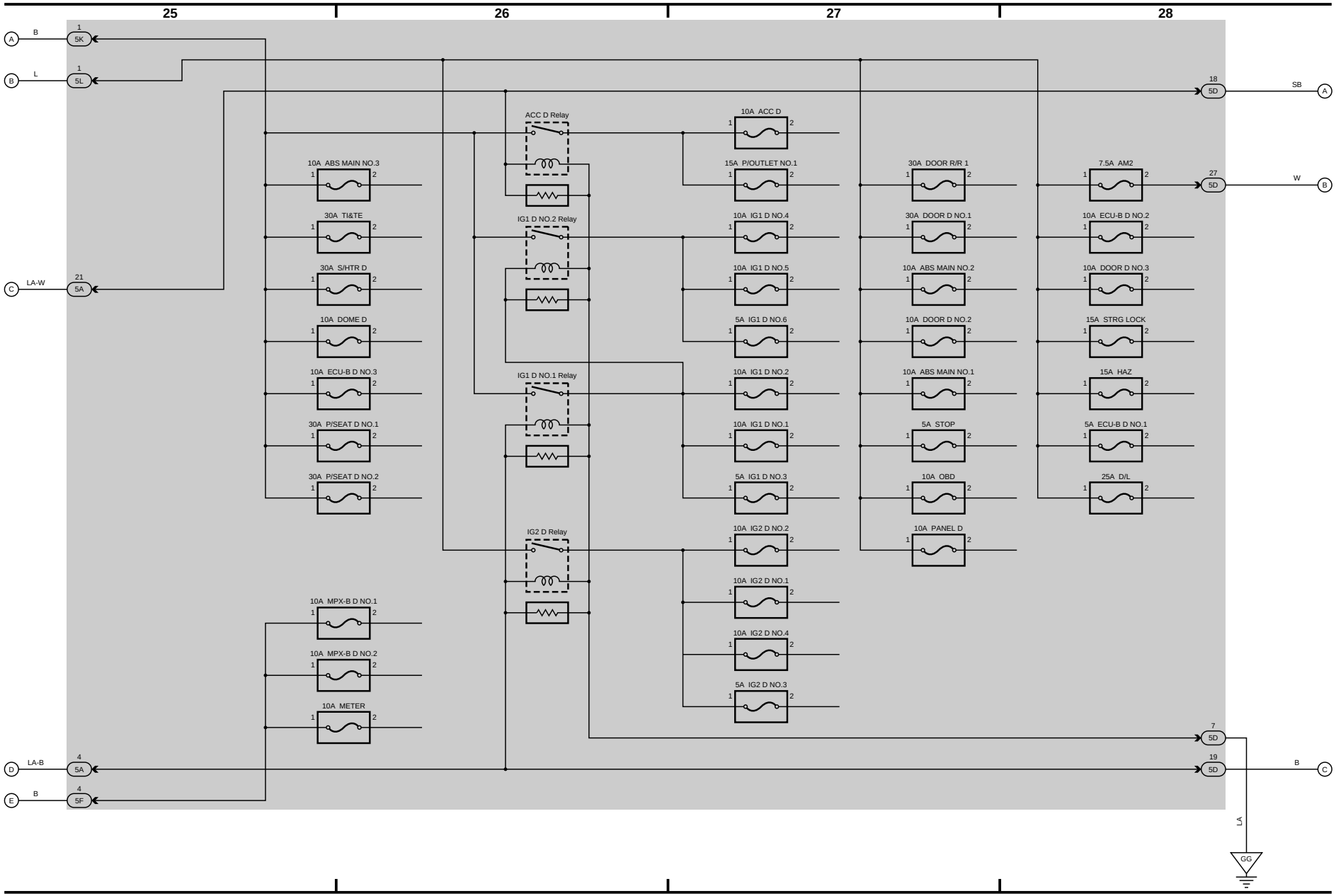
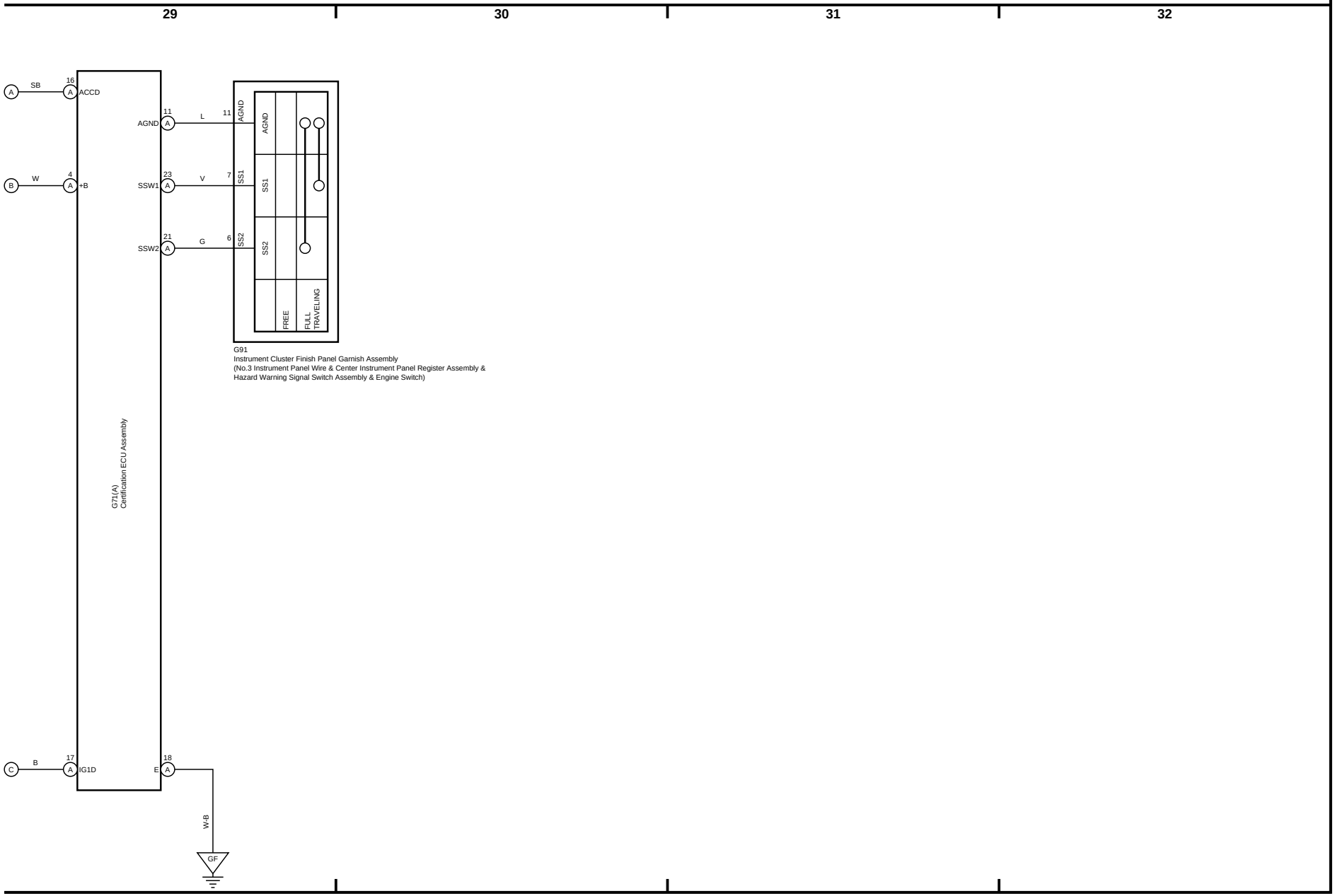
Power Source (8GR-FKS) (RHD)