(Cont. next page)

Dynamic Radar Cruise Control (RHD), Lane Control System (RHD), Lane Departure Alert (RHD),
Lane Keeping Assist (RHD), Pre-Collision System (RHD), Road Sign Assist (RHD)

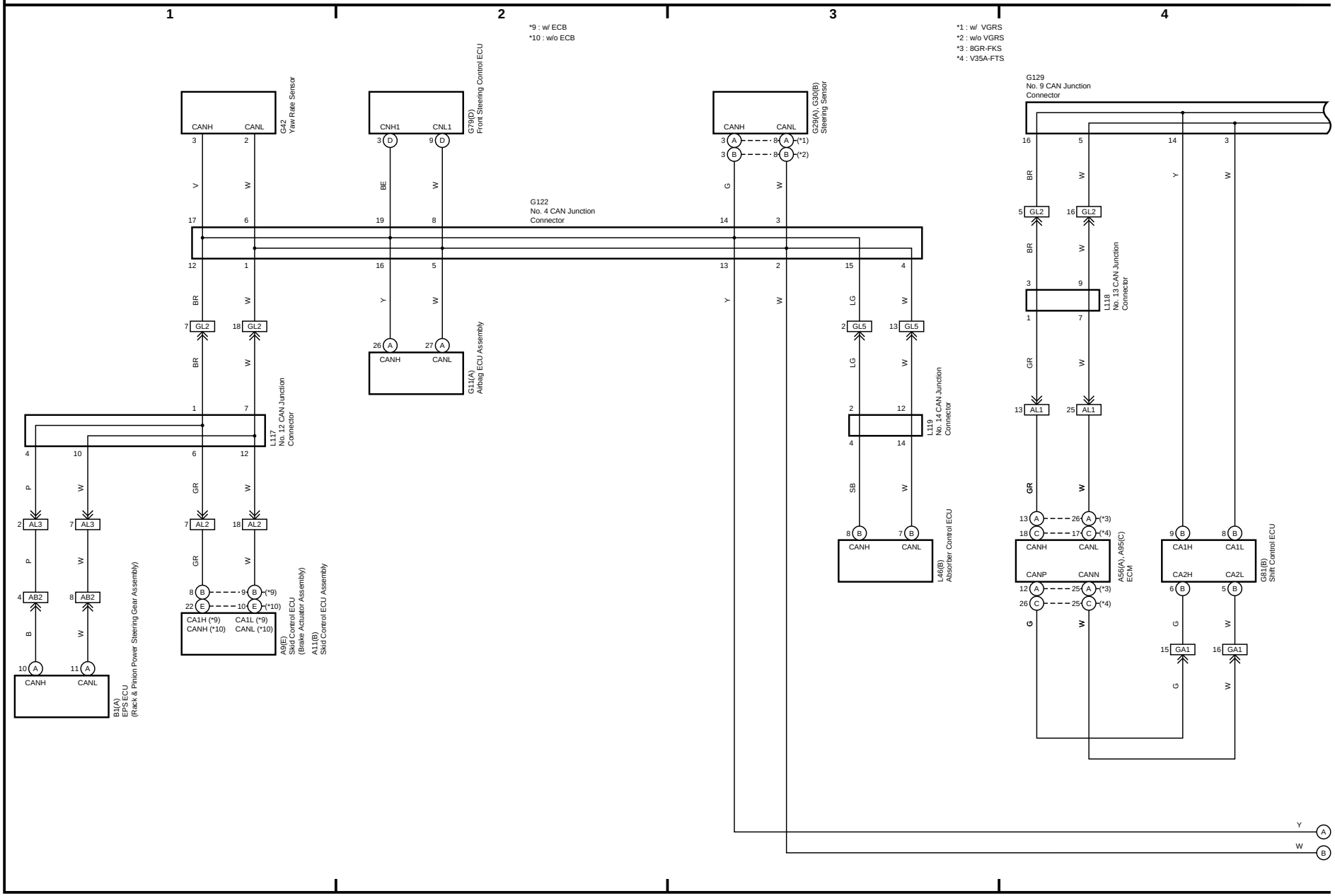

(Cont. next page)

Dynamic Radar Cruise Control (RHD), Lane Control System (RHD), Lane Departure Alert (RHD),
Lane Keeping Assist (RHD), Pre-Collision System (RHD), Road Sign Assist (RHD)

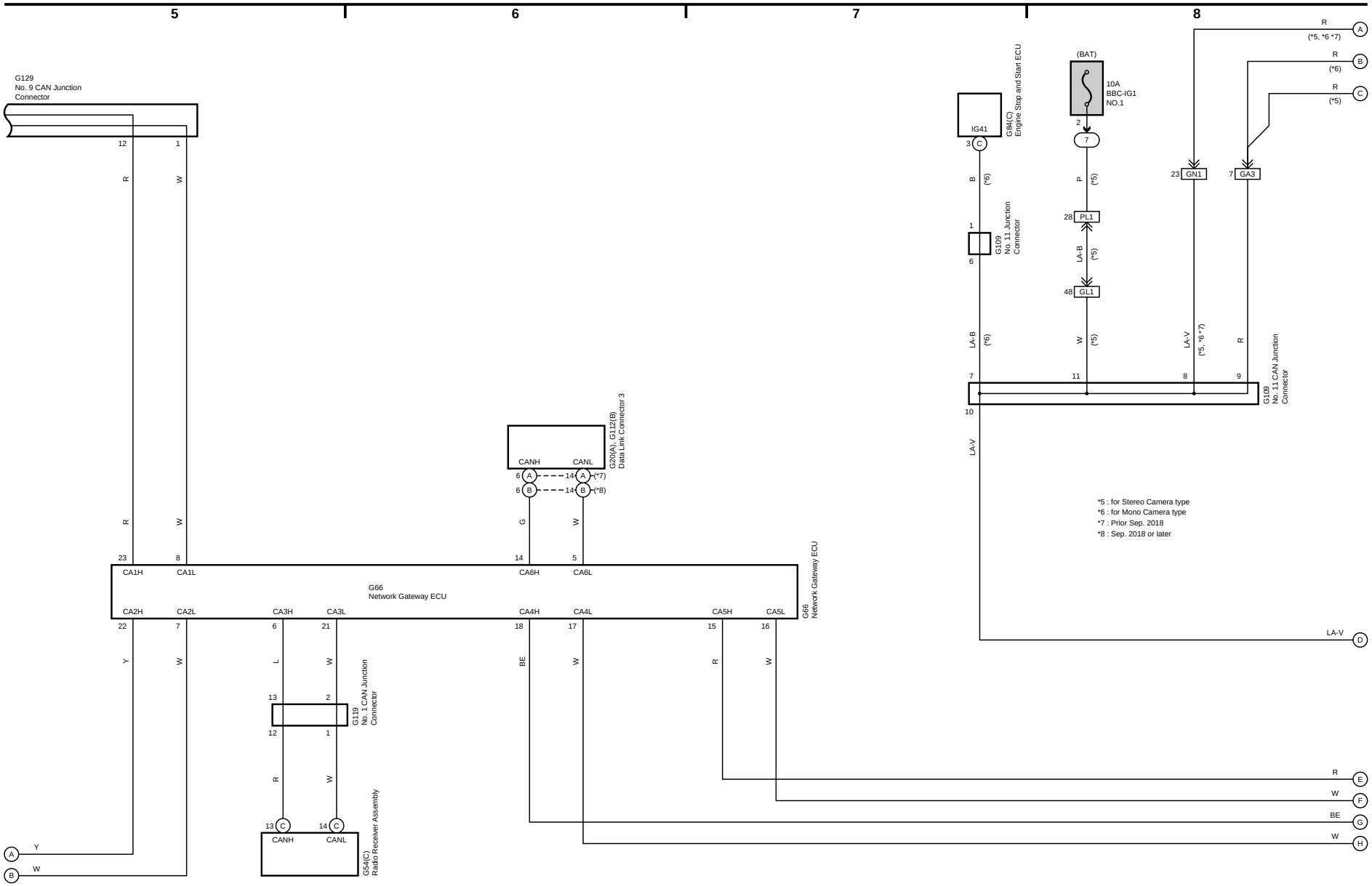

(Cont. next page)

Dynamic Radar Cruise Control (RHD), Lane Control System (RHD), Lane Departure Alert (RHD),
Lane Keeping Assist (RHD), Pre-Collision System (RHD), Road Sign Assist (RHD)

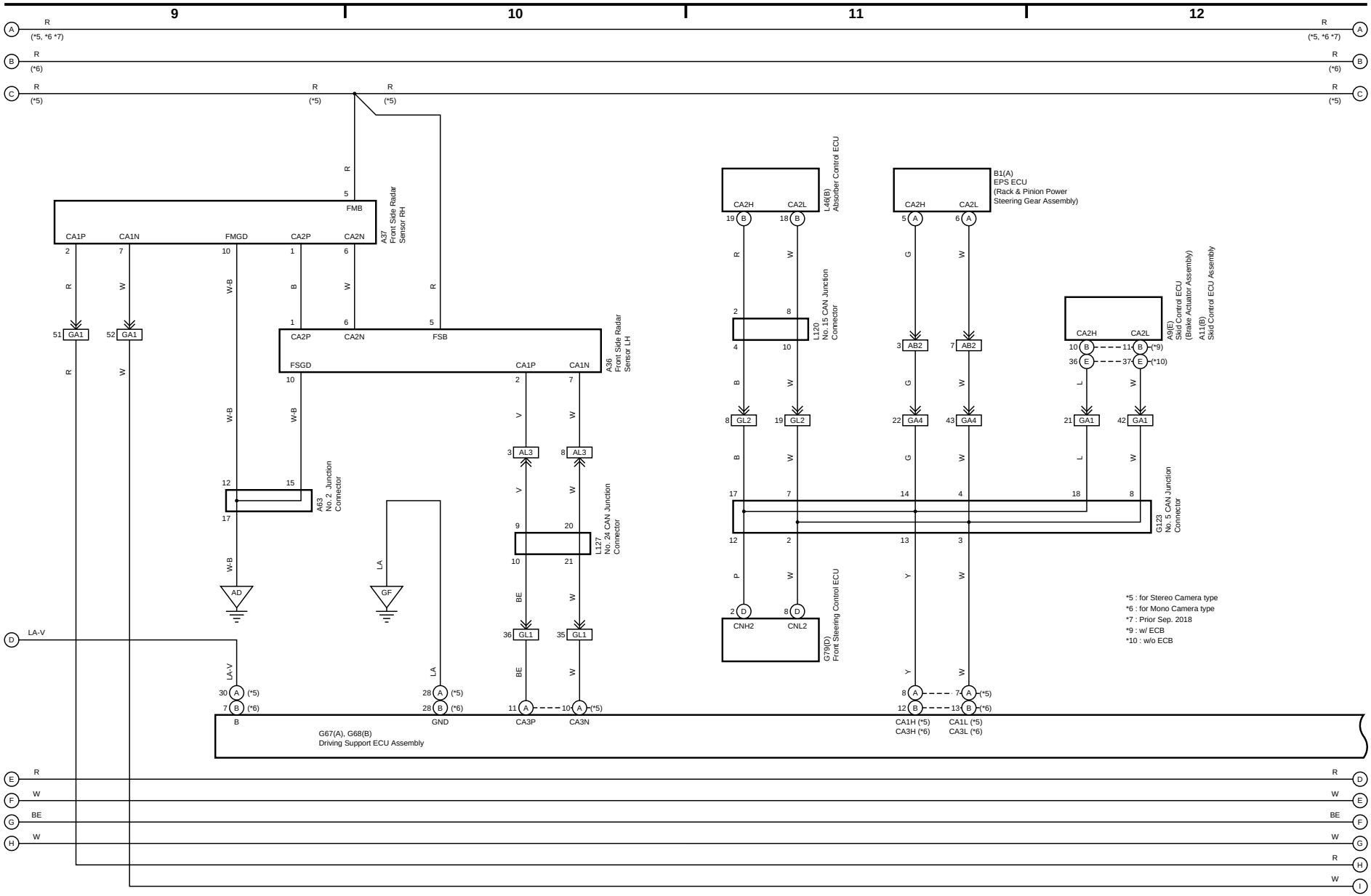

(Cont. next page)

Dynamic Radar Cruise Control (RHD), Lane Control System (RHD), Lane Departure Alert (RHD),
Lane Keeping Assist (RHD), Pre-Collision System (RHD), Road Sign Assist (RHD)

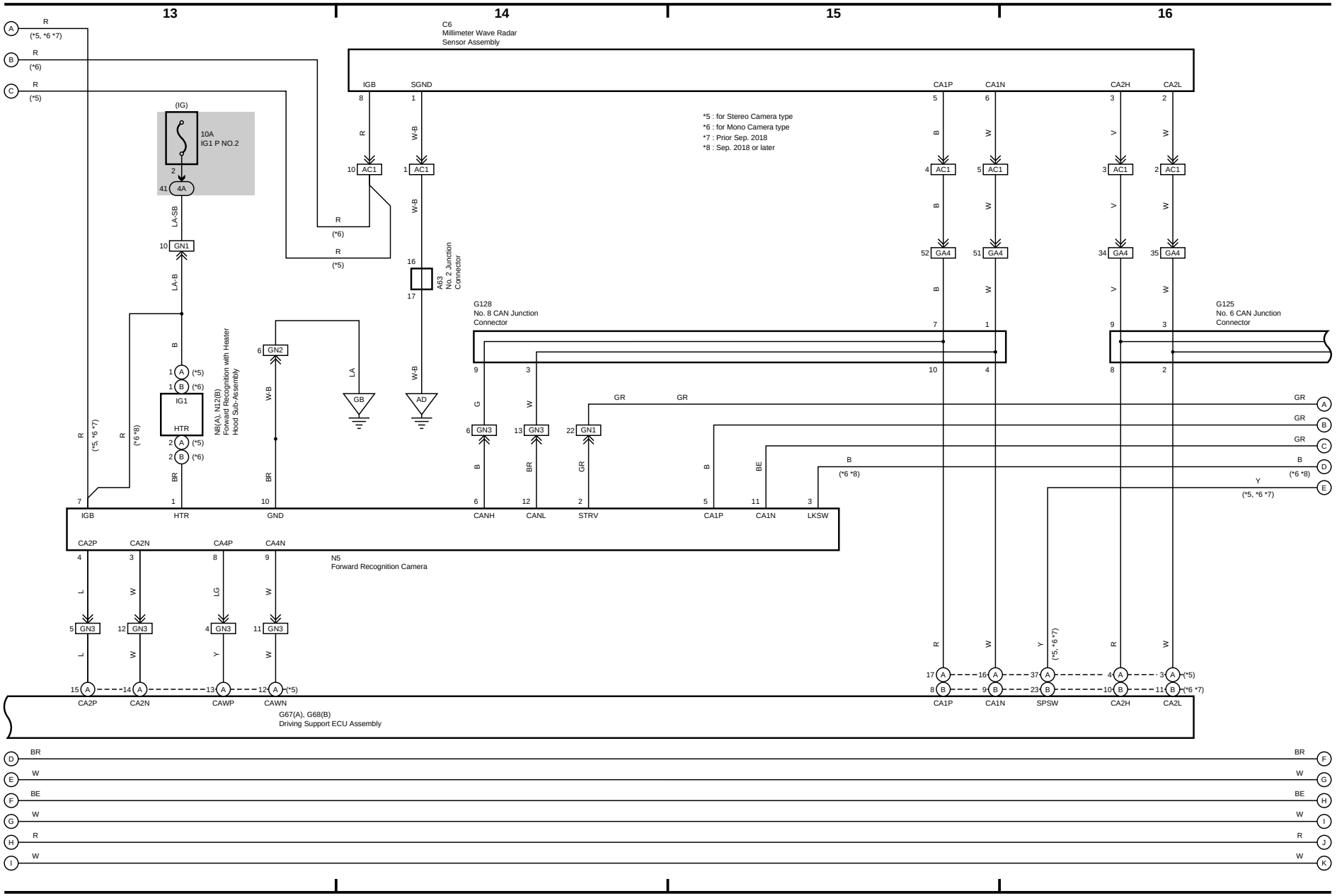

(Cont. next page)

Dynamic Radar Cruise Control (RHD), Lane Control System (RHD), Lane Departure Alert (RHD),
Lane Keeping Assist (RHD), Pre-Collision System (RHD), Road Sign Assist (RHD)

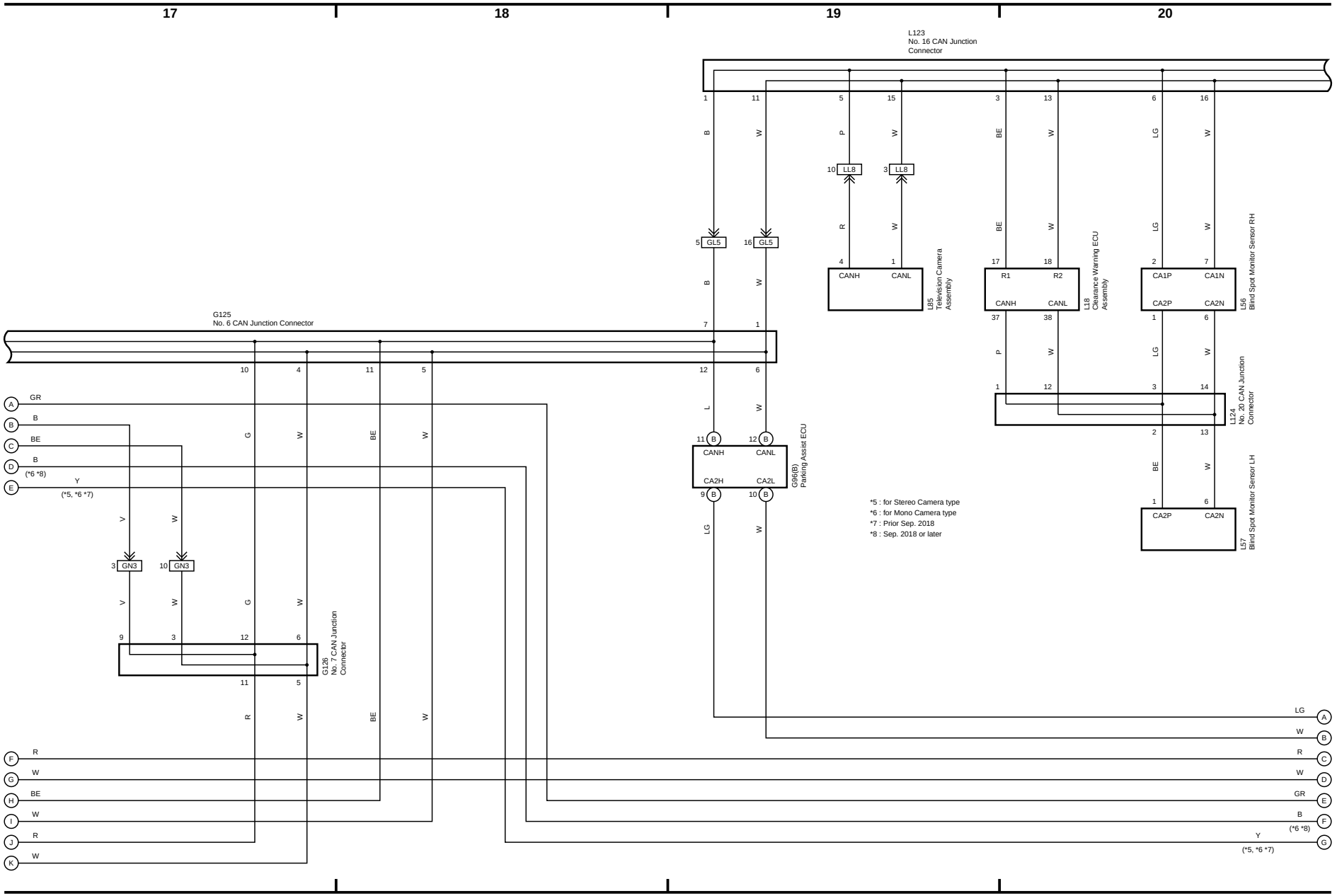

(Cont. next page)

Dynamic Radar Cruise Control (RHD), Lane Control System (RHD), Lane Departure Alert (RHD),
Lane Keeping Assist (RHD), Pre-Collision System (RHD), Road Sign Assist (RHD)

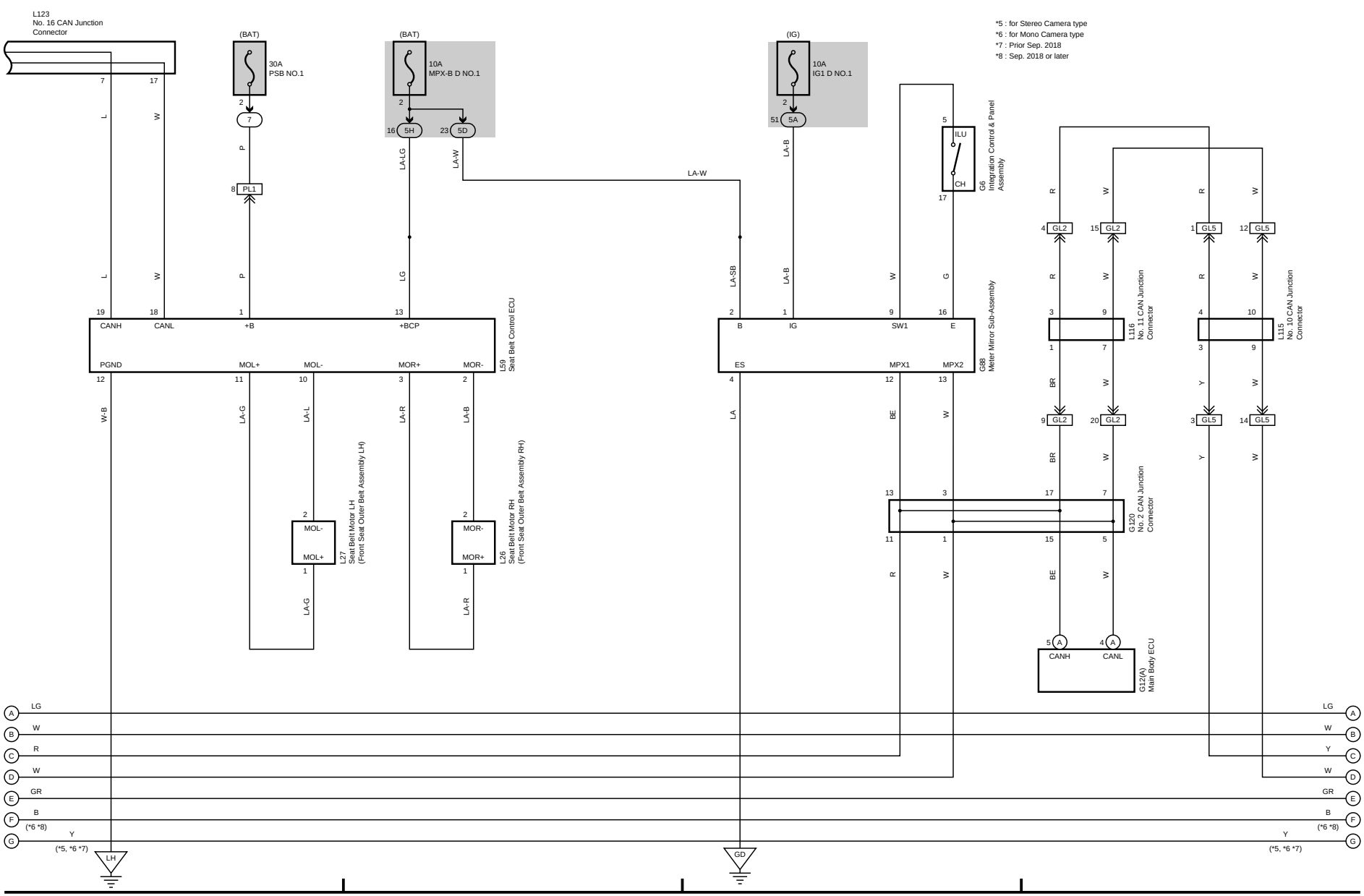

(Cont. next page)

Dynamic Radar Cruise Control (RHD), Lane Control System (RHD), Lane Departure Alert (RHD),
Lane Keeping Assist (RHD), Pre-Collision System (RHD), Road Sign Assist (RHD)

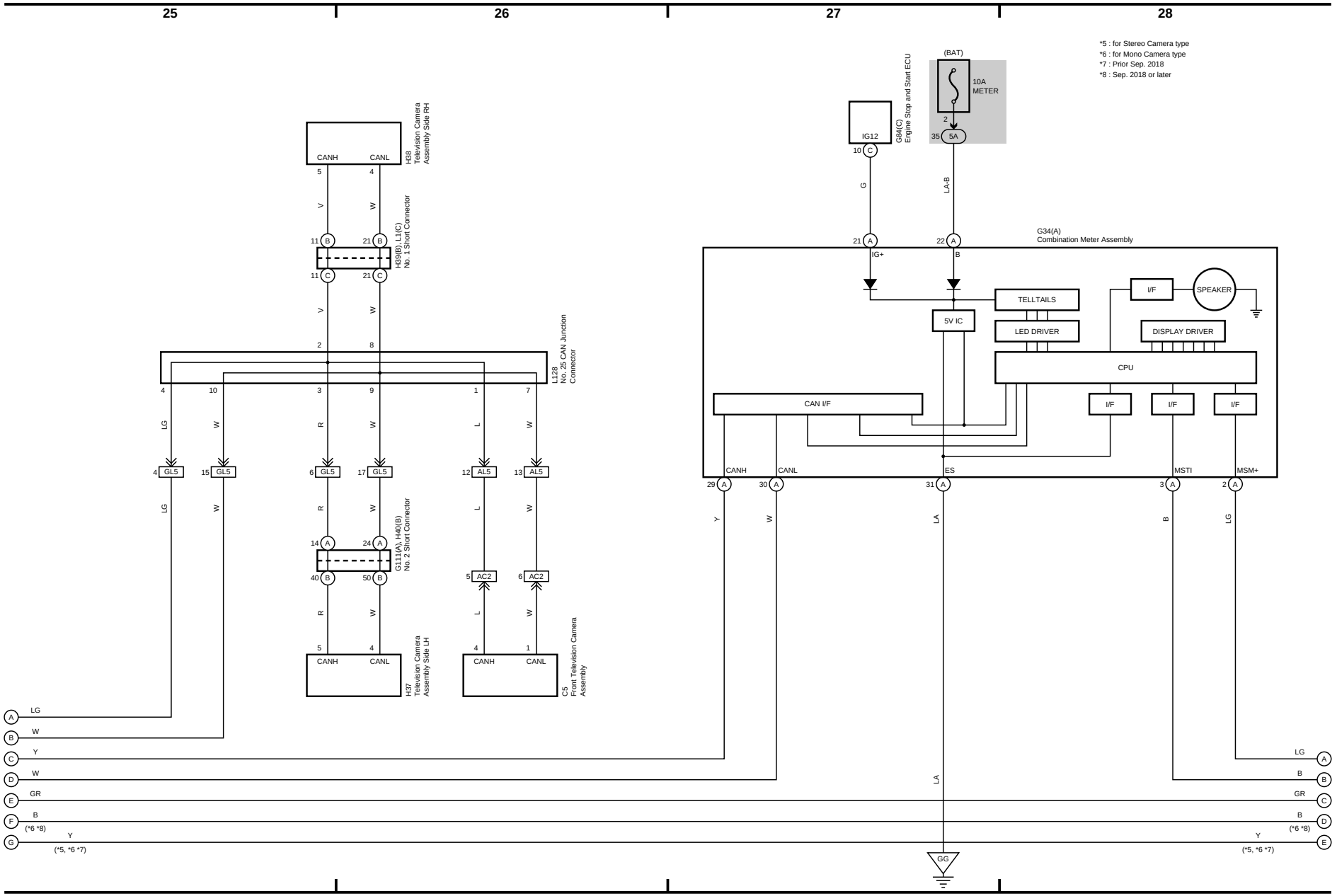
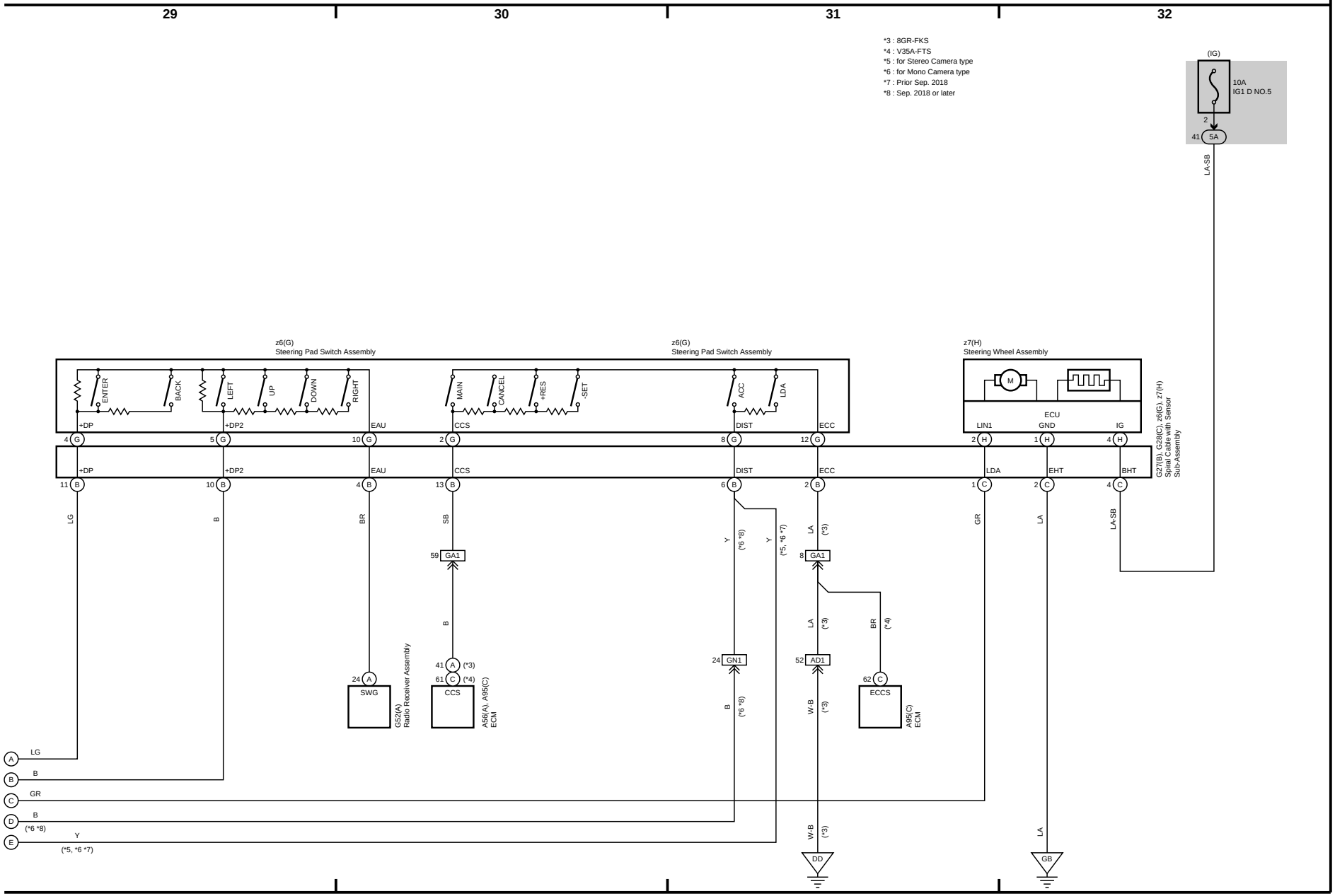
Dynamic Radar Cruise Control (RHD), Lane Control System (RHD), Lane Departure Alert (RHD),
Lane Keeping Assist (RHD), Pre-Collision System (RHD), Road Sign Assist (RHD)